optibelt

Power Transmission

TECHNICAL MANUAL

# OPTIBELT V-BELT DRIVES

optibelt

Power Transmission

# Quality

## is the result of design fuelled by intent.

CERTIFICATION

N° QUAL/1999/13054

The Quality System developed by
Das Qualitätsmanagementsystem der:

ARNTZ GmbH
ARNTZ Beteiligungs GmbH & Co. KG
OPTIBELT GmbH
ARNTZ OPTIBELT GmbH
OPTIBELT PRODUKTIONS GmbH & Co. KG

for the following activities
für die folgenden Tätigkeitsbereiche

DESIGN, PRODUCTION AND SALES OF DRIVE SYSTEMS AND RUBBER SHEETS.

DESIGN, HERSTELLUNG UND VERTRIEB VON ANTRIEBSELEMENTEN UND GUMMIPLATTEN.

carried out in the following location(s)
ausgeübt an folgenden (folgenden) Standort(en)

Conveyer Allee 15 D-37671 HÖXTER DEUTSCHLAND
Rudolstädter Strasse 23 D-07422 BAD BLANKENBURG DEUTSCHLAND

has been assessed and found to conform to the requirements of the standard:
ist auditiert worden und wurde in Übereinstimmung befunden mit den Normforderungen der:

ISO 9001 (1994)

The corresponding certificate has been delivered under AFAQ-ASCERT International (AAI) rules on:
Das korrespondierende Zertifikat ist herausgegeben worden unter AFAQ-ASCERT International (AAI) Regeln am:

2000 - 03 - 19

2002 - 12 - 30

REPRESENTATIVE OF AAI GmbH
DER REPRÄSENTANT DER AAI GmbH

K. ARFMANN-KNÜBEL

CHIEF EXECUTIVE OFFICER OF AAI SA
DER PRÄSIDENT DER DIREKTION DER AAI SA

O. PEYRAT

ON BEHALF OF THE FIRM
DER GESCHÄFTSFÜHRER DER UNTERNEHMUNG

A. UMMEN

Certificate of Registration

Quality Management System

This is to certify that
ARNTZ BELTING COMPANY LIMITED
PENNYBURN PASS
LONDONDERRY
BT48 0AE

Hold Certificate No. FM 21305 and operate a quality management system which complies with the requirements of BS EN ISO 9002:1994 for the activities detailed in the scope of registration.

Originally registered 18 August 1992
This certificate does not expire. To check its validity telephone +44 (0)20 8996 9000

BSI

Power Transmission

# Technical Manual for V-Belt Drives

This manual contains all the important technical information and methods required for calculating drives using Optibelt V-belts and pulleys in industrial applications.

The following drive elements from Optibelt´s comprehensive range are described in detail:

| | |
|---|---|
| optibelt ***SK*** | High performance wedge belts |
| optibelt ***RED POWER II*** | High performance wedge belts, service free |
| optibelt ***VB*** | Classical V-belts |
| optibelt ***SUPER TX M=S*** | V-belts – raw-edge, moulded cogged – |
| optibelt ***KB*** | Kraftbands with high performance wedge belts and classical V-belts |
| optibelt ***KB RED POWER II*** | Kraftbands with high performance wedge belts, service free |
| optibelt ***KBX*** | Kraftbands – raw-edge, moulded cogged – with high performance wedge belts and classical V-belts |
| optibelt ***SUPER VX*** | Variable speed belts – raw-edge, moulded cogged – |
| optibelt ***SUPER DVX*** | Variable speed belts – raw-edge, double cogged moulded |
| optibelt ***DK*** | Double section V-belts |
| optibelt ***PKR*** | Endless V-belts and Kraftbands with patterned top surface |
| optibelt ***KK*** | Plastic V-belting |
| optibelt ***RR*** | Plastic round section belting |
| optibelt ***KS*** | V-grooved pulleys |
| optibelt ***RE*** | Variable speed pulleys |
| optibelt ***TB*** | Taper bushes |

Our engineers from the Applications Engineering Dept. will be pleased to provide advice free of charge on the use of these types of drives and to assist in designing to your specific requirements.

Especially with large-scale series you should by no means renounce our service. Using state-of-the-art programmes, CAP-drive calculation, we deliver the optimum solution.

## Distribution Organisation North America, Asia, Australia

**Canada**
**Optibelt (Canada) Inc.**
351 Steelcase Road West Unit# 8 & 9
**Markham, Ontario L3R 4H9/Canada**
Tel. +1-905-477-81 14
Fax +1-905-477-08 57

**USA**
**Optibelt Corporation**
1120 W. National Avenue
**Addison, Illinois 60 101/USA**
Tel. +1-630-628-84 00
Fax +1-630-628-61 75

**China**
**Optibelt Shanghai Representative Office**
Rong Guang Business Centre Room 1218
11, Chang Shun Road
**Shanghai 200051/China**
Tel. +86-21-6209 1912
Fax +86-21-6208 6906

**Singapore**
**Optibelt Asia Pacific Pte. Ltd.**
No. 4 Loyang Way 1, # 01-02/03
**Singapore 508708**
Tel. +65-545-4682
Fax +65-545-4685

**Australia**
**Optibelt Sales Office Australia**
63, West Street
**North Sydney NSW 2060**
**Australia**
Tel. +61-2-9460 3493
Fax +61-2-9460 0655

**A & M Belting Company Ltd.**
Ballyraine Industrial Estate
**Letterkenny Co. Donegal**
**Republic of Ireland**
Tel. +353-74-2 50 66
Fax +353-74-2 50 61

**Arntz Belting Company Ltd.**
Pennyburn Pass
**Londonderry BT 48 OAE**
**Northern Ireland**
Tel. +44-28 71-26 12 21
Fax +44-28 71-26 33 86

## Distribution Organisation Germany

**North West Sales Office**
Max-Planck-Straße 87
**D-40699 Erkrath**
Tel. +49 (0)21 04-3 30 22-23
Fax +49 (0)21 04-3 55 69

**North East Sales Office**
Corveyer Allee 15
**D-37671 Höxter**
Tel. +49 (0)52 71-6 23 03
Fax +49 (0)52 71-9762 00

**South West Sales Office**
Pfauhauser Straße 43
**D-73240 Wendlingen**
Tel. +49 (0)70 24-71 00
Fax +49 (0)70 24-5 27 92

**South East Sales Office**
Äußere Sulzbacher Straße 88
**D-90491 Nürnberg**
Tel. +49 (0)9 11-9 59 58 06
Fax +49 (0)9 11-9 59 58 08

**Spain**
**Optibelt España, S.A.**
P.O. Box 1141
Rois de Corella, 12
**E-08205 Sabadell**
Tel. +34-3-7 20 79 60
Fax +34-3-7 11 64 90

# Manufacturing and Distribution Organisation of the Arntz Optibelt Group

**Finland**
**Optibelt Finland Oy**
P.O. Box 58
Lampputie 4
**FIN-00751 Helsinki**
Tel. +358-9-3-46 14 00
Fax +358-9-3-46 15 00

**Norway**
**Optibelt Norge AS**
Torvet 5
**N-2000 Lillestrøm**
Tel. +47-63-80 10 25
Fax +46-40-49 90 10

**Sweden**
**Optibelt**
**Skandinaviska AB**
Hästvägen 4
**S-21235 Malmö**
Tel. +46-40-59 21 20
Fax +46-40-49 90 10

**Denmark**
**Optibelt Danmark A/S**
International House
Center Boulevard
**DK-2300 København S**
Tel. +45-32-47 32 34
Fax +46-40-49 90 10

**United Kingdom**
**Optibelt (UK) Ltd.**
5 Bishops Court
Winwick Quay
**GB-Warrington WA2 8QY**
Cheshire
Tel. +44-19 25-41 33 11
Fax +44-19 25-57 37 51

**Netherlands**
**Optibelt Nederland B.V.**
P.O. Box 39
**NL-2140 AA Vijfhuizen**
Schipholweg 955
**NL-2143 CE-**
**Boesingheliede**
Tel. +31-23-5 55 16 51
Fax +31-23-5 55 18 67

**Germany Head Office**
**Arntz Optibelt GmbH**
P.O. Box 10 01 32 · **D-37669 Höxter**
Corveyer Allee 15 · **D-37671 Höxter**
Tel. +49 (0)52 71-6 21
Fax +49 (0)52 71-97 62 00

**Optibelt GmbH**
P.O. Box 10 01 32 · **D-37669 Höxter**
Corveyer Allee 15 · **D-37671 Höxter**
Tel. +49 (0)52 71-6 21
Fax +49 (0)52 71-97 62 00

**Optibelt Produktions**
**GmbH & Co. KG**
Rudolstädter Straße 23
**D-07422 Bad Blankenburg**
Tel. +49 (0)3 6741-48 30
Fax +49 (0)3 6741-4 21 01

**Poland**
**Optibelt Polska Sp. z o.o.**
ul. Nieszawska 15
**PL-61022 Poznan**
Tel. +48-61-6 53 38 51
Fax +48-61-6 53 38 52

**Belgium**
**Optibelt Belgium N.V./S.A.**
Cornelis Schutstraat 28
**B-2100 Deurne**
Tel. +32-3-3 25 22 75
Fax +32-3-3 26 09 55

**France**
**Optibelt France S.A.**
54, Rue de la Gare
**F-68520 Burnhaupt-le-Haut**
Tel. +33-3-89 62 75 10
Fax +33-3-84 62 75 19

**Transac S.A.**
28, Grande rue
**F-90170 Etueffont**
Tel. +33-3-84 54 64 37
Fax +33-3-84 54 68 71

**Switzerland**
**Optibelt AG**
Bodenackerstrasse 70
**CH-4657 Dulliken**
Tel. +41-62-2 95 52 50
Fax +41-62-2 95 52 55

**Austria**
**Optibelt Österreich**
**GmbH**
Carlbergergasse 38
**A-1230 Wien**
Tel. +43-1-8 65 43 97
Fax +43-1-8 65 43 96

**South East Europe**
**Optibelt Österreich GmbH**
Office South East Europe
Carlbergergasse 38
**A-1230 Wien**
Tel. +43-1-8 65 31 00 19
Fax +43-1-8 65 31 00 27

**Italy**
**Optibelt AG**
Via Dandolo, 1
**I-20025 Legnano (Mi)**
Tel. +39-0331-48 10 20
Fax +39-0331-48 10 75

# Table of Contents

## Standard Range Drive belts


Optibelt SK high performance wedge belts ..... 6-7

Optibelt Red Power II high performance wedge belts ..... 8

Optibelt VB classical V-belts ..... 9

Optibelt Super TX V-belts – raw edge, moulded cogged ..... 10-11

Optibelt KB Kraftbands ..... 12-13

Optibelt Super VX and Super DVX variable speed belts – raw edge, moulded cogged / double cogged ..... 14

Optibelt DK double section V-belts ..... 15

Standard properties ..... 16

Special constructions ..... 17


## Standard Range Drive belts


Optibelt SK high performance wedge belts
Sections SPZ, SPA, SPB, SPC, 3V/9N, 5V/15N, 8V/25N ..... 18-19

Optibelt Red Power II, Sections SPZ, SPA, SPB, SPC, 3V/9N, 5V/15N, 8V/25N 20-21

Optibelt VB classical V-belts
Sections 5, Y/6, 8, Z/10, A/13, B/17, 20, C/22, 25, D/32, E/40 ..... 22-26

Optibelt Super TX V-belts
Sections XPZ, XPA, XPB, XPC, 3VX, 5VX, ZX/X10, AX/X13, BX/X17, CX/X22 27-28

Optibelt-KB Kraftbands, Sections SPZ, SPA, SPB, SPC, 3V/9J, 5V/15J, 8V/25J, 3VX, 5VX, A/HA, B/HB, C/HC, D/HD ..... 29-32

Optibelt Red Power II Kraftbands, Sections SPZ, SPA, SPB, SPC, 3V/9J, 5V/15J, 8V/25J ..... 33-34

Optibelt Super VX variable speed belts ..... 35-36

Optibelt DK double section V-belts, Sections AA/HAA, BB/HBB, CC/HCC, DD/HDD, 22 x 22, 25 x 22 ..... 37


## Standard Range Metal


Optibelt KS V-grooved pulleys, Optibelt TB taper bushes ..... 38

Optibelt KS V-grooved pulleys, types ..... 39

Optibelt pulleys - standards - design criteria - types ..... 40


## Standard Range Metal


Optibelt V-grooved pulleys for wedge belts and classical V-belts ..... 41-42

Optibelt V-grooved pulleys US Standard for wedge belts ..... 43

Optibelt V-pulleys for Kraftbands ..... 44-45

Optibelt Deep grooved pulleys ..... 46

Optibelt KS V-grooved pulleys for taper bushes ..... 47-55

Optibelt KS V-grooved pulleys for cylindrical bore ..... 56-61

Optibelt RE Variable speed pulleys ..... 62-64

Optibelt TB Taper bushes ..... 65

optibelt
Power Transmission

# Table of Contents


## Drive calculations

Design calculation ..... 66-77
Formulae and calculation examples ..... 78-80
Drive calculation with Optibelt CAP ..... 81

## Power ratings

Optibelt SK ..... 82-86
Optibelt Red Power II ..... 87-91
Optibelt Super TX ..... 92-99
Optibelt VB ..... 100-110

## Special drives

V-flat drives ..... 111-113
Tension / guide pulleys ..... 114-116
Twisted drives ..... 117-119
Special drives with aramid tension cord ..... 120-121

## Design hints

Belt tension for Optibelt V-belts and Kraftbands ..... 122-126
Calculating the axial force ..... 127
Tension gauges & Tension tester ..... 128
Tensioning for Optibelt V-belts ..... 129
Installation and maintenance aids ..... 130-131
V-grooved pulleys with taper bushes ..... 132
Storage ..... 133
Physical properties ..... 134-137
Problems – causes – remedies ..... 138-139
Length measurement conditions and conversion factors ..... 140-142
Length tolerances ..... 143-144
Conversion factors ..... 145-146

## Special purpose conveyor belts

Product description ..... 147
Design guidelines and Optibelt KB Kraftbands with patterned top surfaces ..... 148
Optibelt PKR endless V-belts with patterned top surfaces ..... 149
Optibelt PKR open ended V-belting with patterned top surfaces ..... 150
Optibelt RR and Optibelt KK ..... 151

## Annex

Table of standards ..... 152-153
Data sheet for calculating / checking drives ..... 154-155
Data sheet for calculating / checking conveyor systems ..... 156-157

# Standard Range

## optibelt SK Wedge Belts to BS 3790/DIN 7753 Part 1

### Construction

Optibelt SK wedge belts consist of

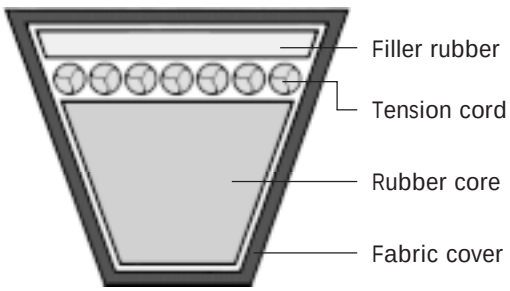


The base and filler rubbers are extruded to precise profile dimensions and weight per unit length to give a better fit in the pulley grooves and vibration free running.

Polyester tension cord is standard, with yarn constructions matched to section. The cord is specially impregnated and then encapsulated in a special rubber compound to give a perfect bond to the base and filler rubber. In addition the cord is pre-stretched prior to building into the belt to give lower stretch characteristics on the drive. As a result, we were able to reduce significantly our recommended minimum allowances for drive centre adjustment, compared to those specified in BS/DIN/ISO.

The fabric cover is treated with a wear resistant rubber compound. This renders the belt resistant to oil, heat and cold and to the effects of dust.

### Properties

Optibelt SK wedge belts are the result of intensive product and material development. The use of the best materials and the most advanced production methods, backed up by the most modern static and dynamic test equipment ensures that the finished product is a most efficient method of transmitting power

Optibelt SK wedge belts differ from classical V-belts as follows:

- Considerable reduction in cross sectional area for similar power transmission capability (belt width to height ratio approx. 1:1.2). This allows substantial savings in pulley face widths and therefore costs.
- Lower comparative belt weight per unit length and consequently lower centrifugal force permits belt speeds of up to 42 m/sec.
- Greater flexibility permits higher flexing rates ($f_{B\,max}$ = 100 per sec.).
- Greater surface area relative to belt section ensures better heat dissipation.
- Less deformation of the belt cross section when in contact with the pulley therefore better contact between the belt edges and the pulley grooves.

All these properties result in a performance significantly higher than that of classical V-belts with approximately the same top widths. Therefore Optibelt SK wedge belts should be used on all new drive designs.

### Applications

Optibelt SK wedge belts with the sections SPZ, SPA, SPB and SPC were specially developed for all industrial applications from lightly loaded drives, such as those for pumps, to heavily loaded stone crusher drives.

### Standards

Optibelt SK wedge belts SPZ, SPA, SPB and SPC conform to BS 3790, DIN 7753 Part 1 and ISO 4184.

British, German and ISO standards specify the datum width as a basis for the standardisation of V-belts and grooves. This is the width of a V-belt that remains unchanged when the belt is bent perpendicular to the base of its cross section. The datum length Ld of the belt is the length measured at the position of the datum width and is the basis of standardisation.

Optibelt offer a more comprehensive range of belt sections and lengths than those included in any individual standard.

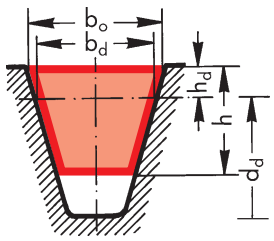


*Table 1*

| Section | | | SPZ | SPA | SPB | SPC |
|---|---|---|---|---|---|---|
| Belt top width | $b_o$ | ≈ | 9.7 | 12.7 | 16.3 | 22 |
| Datum width | $b_d$ | | 8,5 | 11 | 14 | 19 |
| Belt heigth | h | ≈ | 8 | 10 | 13 | 18 |
| Distance down to datum line | $h_d$ | ≈ | 2 | 2,8 | 3,5 | 4,8 |
| Recommended minimum pulley datum diameter | $d_{d\,min}$ | | 63 | 90 | 140 | 224 |
| Belt weight (kg/m) | | ≈ | 0.074 | 0.123 | 0.195 | 0.377 |
| Max. flexing rate ($s^{-1}$) | $f_{B\,max}$ | ≈ | 100 | | | |
| Max. belt speed (m/s) | $v_{max}$ | ≈ | 42 | | | |

# Standard Range

## optibelt SK Wedge Belts to USA Standard RMA / MPTA

### Construction / Properties

Optibelt SK wedge belts to USA Standard RMA / MPTA have the same construction and properties as wedge belts to BS 3790 and DIN 7753 Part 1.

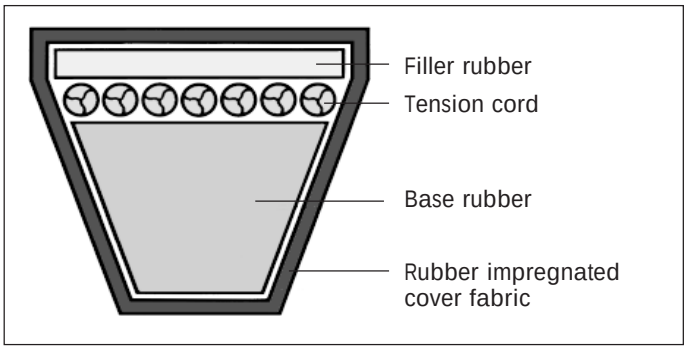


*Table 2*

| Section | | | 3V/9N | 5V/15N | 8V/25N |
|---|---|---|---|---|---|
| Belt top width | $b_o$ | ≈ | 9 | 15 | 25 |
| Belt heigth | h | ≈ | 8 | 13 | 23 |
| Recommended minimum pulley datum diameter | $d_{a\ min}$ | | 63 | 140 | 335 |
| Belt weight (kg / m) | | ≈ | 0.074 | 0.195 | 0.575 |
| Max. flexing rate per sec. | $f_{B\ max}$ | ≈ | 100 | | |
| Max. belt speed (m / s) | $v_{max}$ | ≈ | 42 | | |

### Standardisation / Dimensions

The three wedge belt sections standardised in the USA are 3V / 9N, 5V / 15N and 8V / 25N. The cross section dimensions of these belts and the lengths by which they are identified are not in accordance with BS 3790 or DIN 7753.

The section 3V / 9N roughly corresponds to SPZ; and 5V / 15N to the section SPB. There is no comparable BS / DIN / ISO wedge belt section for 8V / 25N. It is possible to use belts of 3V / 9N and 5V / 15N section in SPZ-Z / 10 or SPB-B / 17 pulleys, respectively; but the use of SPZ or SPB belts in RMA / MPTA standard pulleys is not normally recommended. The top width of the American pulley grooves are narrower than those of the corresponding BS / DIN / ISO pulleys. This can cause wear on the upper edges of SPZ and SPB section belts and can lead to premature failure.

**Optibelt SK wedge belts in SPB section have been so designed that they are also suitable for use with 5V / 15N pulleys.**

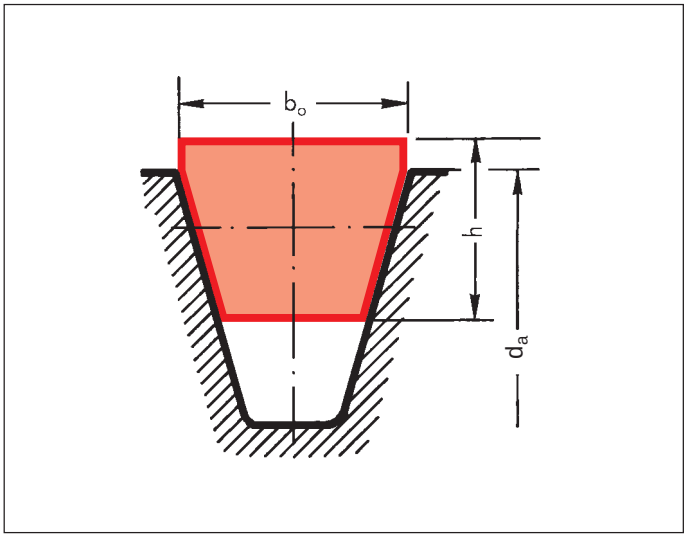


The belt length designation refers to the effective outside length.

Example:

| Inch designation | Metric designation |
|---|---|
| 3V 750 | 9N 1905 |
| 3V = belt top width (3 / 8") | 9 = belt top width (9 mm) |
| | N = designation for single V-belt |
| 750 = outside length in inches x 10 | 1905 = effective outside length in mm (1 inch = 25.4 mm) |

$$L_a = \frac{750 \cdot 25.4}{10}$$

$L_a$ = 1905 mm

### Applications

The use of Optibelt SK wedge belt drives in sections 3V / 9N and 5V / 15N is recommended for machines exported to countries such as the USA and Canada where these belt sections are standardised and used predominantly.

Section 8V / 25N is primarily employed in very heavy duty drives such as mills or stone crushers. As these wedge belts transmit very high levels of power, they can sometimes form a more compact drive than the SPC section.

For this reason, the 8V / 25N section has continued to be used in Europe for such applications. A further advantage is the fact that single wedge belts can be replaced by Kraftbands, without changing the pulley geometry, should unexpected belt vibration problems develop.

### Drive Calculation

Drive calculations follow procedures described in this manual. Power ratings for 3V / 9N and 5V / 15N sections are the same as those for SPZ and SPB sections respectively but, for 3V / 9N and 5V / 15N the pulley outside diameter is the basis for calculation, not the pitch or datum diameter. Slight differences in the theoretical drive speed and the speed ratio are not significant in practice.

# Standard Range

## optibelt *RED POWER II* High Performance Wedge Belts

### Construction

Optibelt Red Power II wedge belts.

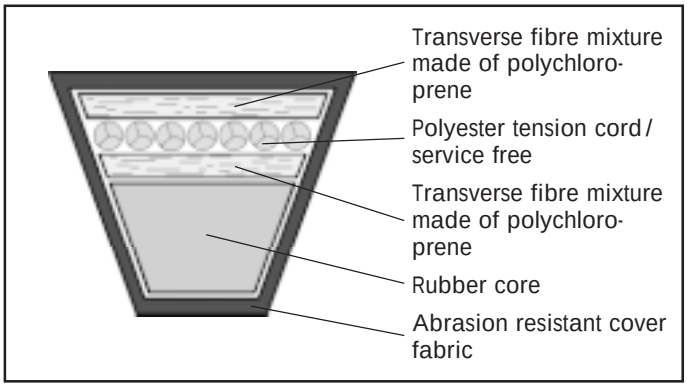


The tension cord for all sections and cross sections consists of a special polyester cord. Due to the special treatment of the tension cord the Optibelt Red Power II wedge belt is very low stretch and service free, so that retensioning is not necessary.

The fibre mixture over and under the tension cord guarantees highly dynamic load of the belt and provides good flexibility in combination with the polyester tension cord.

The cover fabric is extremely wear resistant, flexible and abrasion proof.

### Properties

The high-quality components in connection with product manufacturing make the Optibelt Red Power II a service free V-belt. Production is continuously monitored using state-of-the-art static and dynamic testing devices.

Application with drives using idler pulleys is possible due to the special set-up of the Optibelt Red Power II.

Its properties:

- service free
- strong power rating
- favourable cost
- SetConstant
- environmentally friendly

Optibelt Red Power II are oil-resistant, heat-resistant and dust protected as standard.

Using the electrically conductive Optibelt Red Power II requires testing the stipulated properties according to ISO 1813. With our acceptance test certificate according to EN 10204 “3.1.B” we prove its anti-static properties.

### V-belt tensioning

For the initial fitting of Optibelt Red Power II the same calculation methods are used as for standard Optibelt V-belts. The tensioning values are to be calculated on the same basis or to be taken from the table on page 129. Once correctly tensioned Optibelt Red Power II V-belts need no retensioning.

### Applications

Optibelt Red Power II wedge belts were especially developed for mechanical engineering. The fields of application are among others compressors, pumps, presses, fans and other heavy duty drives.

### Standardisation / Dimensions

Optibelt Red Power II wedge belts with the sections SPZ, SPA, SPB, SPC, 3V/9N, 5V/25N are standardised according to DIN 7753 Part 1, ISO 4184 and RMA/MPTA.

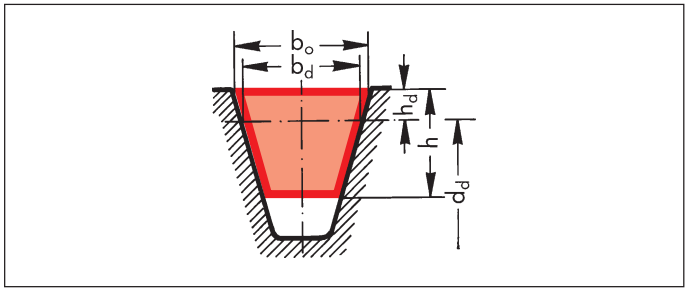


| Section | | | SPZ | SPA | SPB | SPC |
|---|---|---|---|---|---|---|
| Belt top width | $b_o$ | ≈ | 9.7 | 12.7 | 16.3 | 22 |
| Datum width | $b_d$ | | 8.5 | 11 | 14 | 19 |
| Belt heigth | h | ≈ | 8 | 10 | 13 | 18 |
| Distance down to datum line | $h_d$ | ≈ | 2 | 2,8 | 3,5 | 4,8 |
| Recommended minimum pulley datum diameter | $d_{d\ min}$ | | 63 | 90 | 140 | 224 |
| Belt weight (kg/m) | | ≈ | 0.074 | 0.123 | 0.195 | 0.377 |
| Maximum flex rate (per sec.) | $f_{B\ max}$ | ≈ | 100 | | | |
| Maximum belt speed (m/s) | $v_{max}$ | ≈ | 42 | | | |

| Section | | | 3V/9N | 5V/15N | 8V/25N |
|---|---|---|---|---|---|
| Belt top width | $b_o$ | ≈ | 9 | 15 | 25 |
| Datum width | h | ≈ | 8 | 13 | 23 |
| Recommended minimum pulley datum diameter | $d_{a\ min}$ | | 63 | 140 | 335 |
| Belt weight (kg/m) | | ≈ | 0.074 | 0.195 | 0.575 |
| Maximum flex rate (per sec.) | $f_{B\ max}$ | ≈ | 100 | | |
| Maximum belt speed (m/s) | $v_{max}$ | ≈ | 42 | | |

# Standard Range

## optibelt *VB* Classical V-Belts to BS 3790 and DIN 2215

### Construction / Properties

Optibelt VB classical V-belts are manufactured using the same production processes as those for Optibelt SK wedge belts.

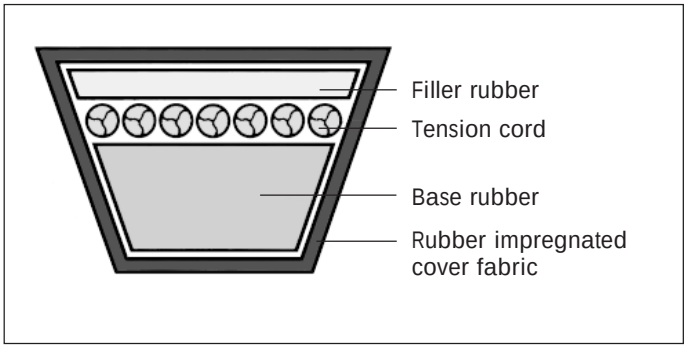


The components used are perfectly suited to the power ratings $P_N$ shown in later tables. These values are significantly higher than those quoted in BS 3790 or DIN 2218 and therefore offer a greater factor of safety on critical drives.

- Optibelt VB classical V-belts have a belt width to belt height ratio of approx. 1:1.6.
- The maximum belt speed $v_{max}$ = 30 m / s should not be exceeded.
- The permissible flex rate is considerably lower that that for wedge belts, at $f_{B\ max}$ = 80 per second.

### Applications

Optibelt VB classical V-belts are employed primarily as replacements on industrial drives. For new drives, it is almost always recommended that wedge belts be specified for reasons of space and cost. However, special drives, such as V-flat, often can only use classical V-belts. Similarly, difficult drives for agricultural and horticultural machinery are often unsuitable for wedge belts by virtue of the use of small pulleys or back bend idlers.For these applications special belt constructions may be necessary. It is not possible within this Manual to describe all of the special constructions or the calculation data applicable to them. It is therefore requested that all details of such drives are forwarded to our Applications Engineering Department for calculation and recommendation.

### Standardisation / Dimensions

The Optibelt range also includes sections 5, 8, 20 and 25 from an earlier edition of DIN 2215. These sections should, where possible, be avoided on replacement and rationalisation grounds.

**The British and ISO Standards specify the datum length for measuring and identifying the belt length. The datum length is the circumferential length of the belt measured at a datum width lp. The earlier DIN standard length designation using the inside length $L_i$ is replaced by the datum length $L_d$. For the conversion factors from pitch to inside length, please see page 141.**

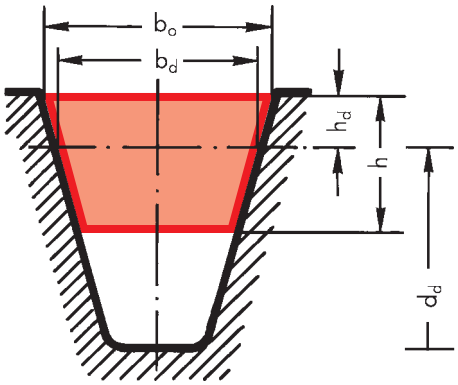


*Table 3*

| Section | DIN 2215 | | (5) | 6 | (8) | 10 | 13 | 17 | (20) | 22 | (25) | 32 | 40 |
|---|---|---|---|---|---|---|---|---|---|---|---|---|---|
| | BS 3790 / ISO 4184 | | – | Y | – | Z | A | B | – | C | – | D | E |
| Belt top width | $b_o$ | ≈ | 5 | 6 | 8 | 10 | 13 | 17 | 20 | 22 | 25 | 32 | 40 |
| Datum width | $b_d$ | | 4.2 | 5.3 | 6.7 | 8.5 | 11 | 14 | 17 | 19 | 21 | 27 | 32 |
| Belt heigth | h | ≈ | 3 | 4 | 5 | 6 | 8 | 11 | 12,5 | 14 | 16 | 20 | 25 |
| Distance down to datum line | $h_d$ | ≈ | 1.3 | 1.6 | 2.0 | 2.5 | 3.3 | 4.2 | 4.8 | 5.7 | 6.3 | 8.1 | 12 |
| Recommended minimum pulley datum diameter | $d_{d\ min}$ | | 20 | 28 | 40 | 50 | 71 | 112 | 160 | 180 | 250 | 355 | 500 |
| Belt weight (kg / m) | | ≈ | 0.018 | 0.026 | 0.042 | 0.064 | 0.109 | 0.190 | 0.266 | 0.324 | 0.420 | 0.690 | 0.958 |
| Max. flexing rate (per sec.) | $f_{B\ max}$ | ≈ | 80 | | | | | | | | | | |
| Max. belt speed (m / s) | $v_{max}$ | ≈ | 30 | | | | | | | | | | |

# Standard Range

## optibelt *SUPER TX M=S* V-Belts – raw edge, moulded cogged – BS/DIN/ISO, RMA/MPTA

The advantages of the Optibelt Super TX M=S V-belts are evident where –

- extremely small pulley diameters
- high belt speeds
- extraordinary power transmission requirements
- high ambient temperatures

render the use of wrapped V-belts uneconomical and impractical.

Optibelt Super TX M=S V-belts sections XPZ, XPA, XPB, XPC, 3VX/9NX, 5VX/15NX, ZX/X10, AX/X13, BX/X17 and CX/X22 offer the best technical and economic solutions for these conditions through their use of high grade components coupled to the most advanced production machinery.

### Construction/Properties

Optibelt Super TX M=S belts consist of

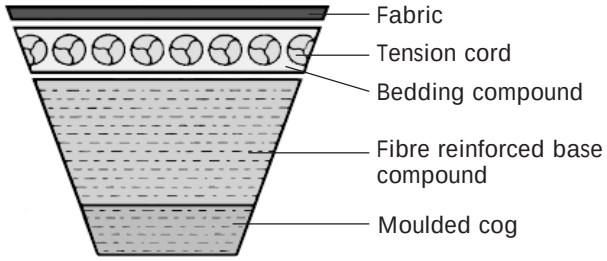


The base compound consists of a polychloroprene rubber mixture filled with fibres arranged to lie across the belt section. These provide an effective support to the tension cord.

The result is

- very high flexibility
- high transverse stiffness
- considerably increased abrasion/wear resistance and
- insensitivity to slip

The use of a new type of polyester cord, specially developed Optibelt Super TX M=S V-belts imparts

- remarkably low stretch properties

to the belt.

This specially designed tension cord is securely locked into the bedding compound. Perfect adhesion between the components is ensured even under the highest dynamic loading conditions.

The fabric layers at the top of the belt support the tension cord and contribute to the

- greater belt flexibility.

The fibre reinforced base compound, in conjunction with the Optibelt tension cord and the moulded cog, offers increased and more efficient transmission of power.

The moulded cogs reduce bending stress and give outstanding flexibility. As a result, significantly smaller pulleys than those used with conventional fabric wrapped V-belts can be employed.

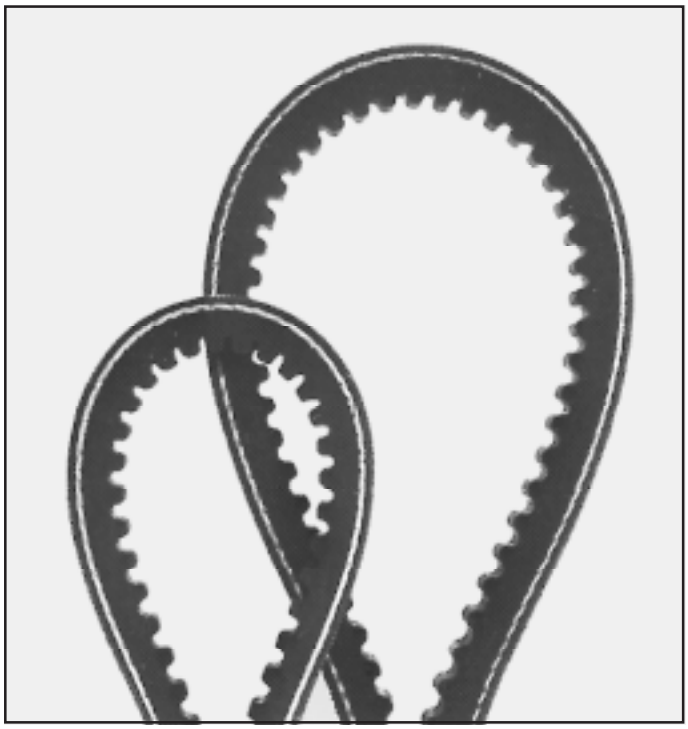

With Optibelt Super TX M=S V-belts drive ratios (I) of up to 12 to 1 are possible.

Multi-stage drives can be eliminated.

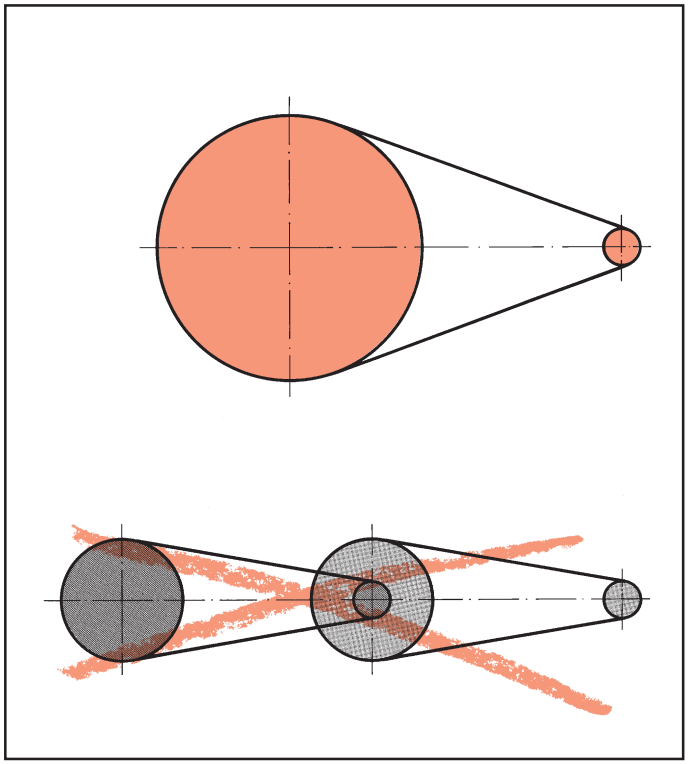

# Standard Range

## optibelt *SUPER TX M=S* V-Belts – raw edge, moulded cogged – BS/DIN/ISO, RMA/MPTA

Optibelt Super TX M=S V-belts are more heat and oil resistant than wrapped V-belts as new, high quality rubber compounds are used.

Weight and space requirements are reduced by their ability to transmit higher power even with small diameter pulleys often resulting in a

- significant reduction in cost.

### Power Comparison

Pulley datum diameter $d_d$ = 140 mm
Ratio i = 1:1

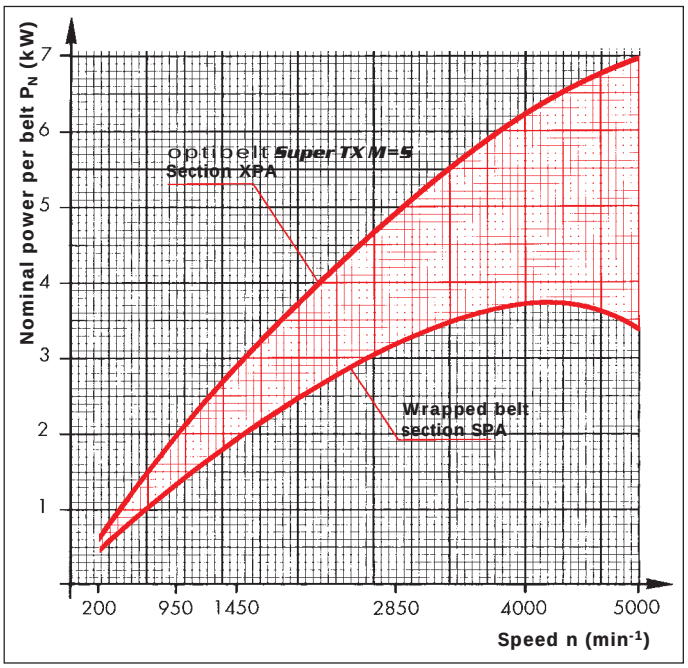


### Drive Calculation

Drive designs using Optibelt Super TX M=S belts should be undertaken following the example given on pages 59 to 61. The higher power ratings given in the relevant tables, apply. These are based on a theoretical laboratory running time of 25,000 hours.

### Belt Tension/Static Shaft Loading

Belt tension and static shaft loading are calculated as for wrapped belts. The shaft loading is usually no greater than that for the same drive using wrapped belts. It is often possible, due to a reduction in the number of belts used, that the shaft loading could be lower. The individual Super TX belt requires a higher tension than the wrapped belt in order to utilise its greater power transmission capability.

The precision ground sides of the Optibelt Super TX M=S V-belts ensure uniform seating in the pulley grooves, resulting in smoother running.

### Applications

The use of Optibelt Super TX M=S belts in borderline cases is recommended wherever difficulties are anticipated with wrapped V-belts.

### Standardisation/Dimensions

The cross sections and dimensions of Optibelt Super TX M=S V-belts correspond to BS 3790:1981, DIN 7753 Part 1, DIN 2215, ISO 4184 and RMA/MPTA.

The basis for the length measurement is the datum length ($L_d$) to BS/DIN/ISO.

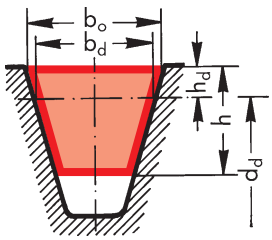


*Table 4*

| Section | Belt top width $b_o$ ≈ | Datum with $b_d$ | Belt height h ≈ | Distance down to datum line $h_d$ ≈ | Belt weight (kg/m) ≈ |
|---|---|---|---|---|---|
| XPZ | 9.7 | 8.5 | 8 | 2 | 0.065 |
| XPA | 12.7 | 11 | 10 | 2.8 | 0.105 |
| XPB | 16.3 | 14 | 13 | 3.5 | 0.183 |
| XPC | 22 | 19 | 18 | 4.8 | 0.340 |
| 3VX/9NX | 9 | — | 8 | — | 0.065 |
| 5VX/15NX | 15 | — | 13 | — | 0.183 |
| ZX/X10 | 10 | 8.5 | 6 | 2.5 | 0.062 |
| AX/X13 | 13 | 11 | 8 | 3.3 | 0.099 |
| BX/X17 | 17 | 14 | 11 | 4.2 | 0.165 |
| CX/X22 | 22 | 19 | 14 | 5.7 | 0.276 |

### Pulleys

Optibelt Super TX M=S V-belts are used with pulleys to BS 3790, DIN 2211, DIN 2217, ISO 4183 and RMA/MPTA. Considerably smaller minimum pulley datum diameters are acceptable.

*Table 5*

| Recommend minimum pulley datum diameter (mm) | | | |
|---|---|---|---|
| Section | raw edge, moulded cogged | Section | wrapped |
| XPZ | 56 | SPZ | 63 |
| XPA | 71 | SPA | 90 |
| XPB | 112 | SPB | 140 |
| XPC | 180 | SPC | 224 |
| 3VX/9NX | 56 | 3V/9N | 63 |
| 5VX/15NX | 112 | 5V/15N | 140 |
| ZX/X10 | 40 | Z/10 | 50 |
| AX/X13 | 63 | A/13 | 71 |
| BX/X17 | 90 | B/17 | 112 |
| CX/X22 | 140 | C/22 | 180 |

# Standard Range
## optibelt *KB* Kraftbands

### Construction

The Optibelt KB Kraftbands are made up of individual V-belts rigidly connected by a cover plate. This compact drive element with single-belt-characteristics is also known as a joined V-belt. According to application Kraftbands are fitted with two, three, four or five ribs. It is also possible to provide the cover plate with specially patterned surfaces.

Raw edge, moulded cogged Optibelt KBX Kraftbands with the belt sections 3VX/9JX, 5VX/15JX, XPZ, XPA, AX/HAX, BX/HBX are available upon request in lengths from 1250 to 3550 mm.

Optibelt KB

Optibelt KBX

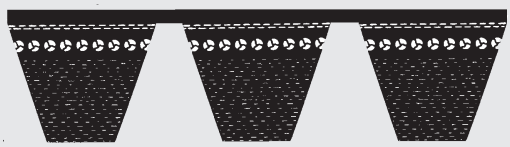

### Applications

Optibelt KB Kraftbands are predominantly employed for solving problems associated with:

- pulsating run
- large centre distances in combination with small pulley diameters (long span lengths)
- vertical shafts
- reversing drives
- V-flat drives
- coupling drives
- conveyor systems (materials handling technology)

In mechanical engineering Kraftbands are successfully used for example in screen vibrators, saw mills, stone crushers, road construction machinery, pulpers, compressors, fans, lathes, grinding and milling machines.

In agricultural machinery Optibelt KB Kraftbands are also used as coupling belts. Due to the single belt characteristics is is possible to achieve smooth engagement.

For conveying, Optibelt KB Kraftbands can be supplied with special top surfaces.

With these patterned top surfaces they are especially suitable for transporting containers and heavy material, for example for loading aircraft. See also the chapter on conveyor belts.

PKR 0

PKR 3

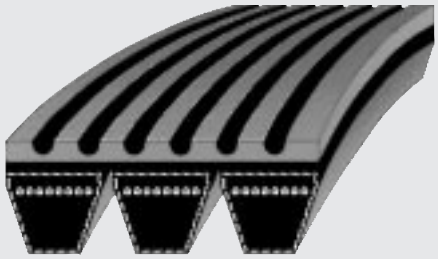

Kraftbands must be protected from direct contact with undesired material such as stones, grit, wood shavings etc. In such operating conditions the drive has to be protected by protective grid or similar devices.

### Standardisation – Optibelt KB Kraftband

Optibelt-KB Kraftbands with high-performance wedge belts are manufactured according to international practice using sections 3V/9J, 5V/15J, 8V/25J. They comply with the standard ISO 8419 lengths in the reference system. The pulleys are standardised to ISO 5290. 8419 lengths. The pulleys are standardised to ISO 5290.

# Standard Range
## optibelt *KB* Kraftbands

The ISO Committee TC 41/SC1 has used the American Standard RMA/MPTA as the basis for this international standard. The sections 3V, 5V, and 8V have been designated 9J, 15J and 25J respectively.

**Example:** 9J

9 = approx. 9 mm nominal top width of pulley groove
J = joined

### Standardisation – Classical V-Belts

In the course of international and national standardisation, Optibelt-KB Kraftbands using classical V-belts have been brought into line with the USA Standard RMA/MPTA (A,B,C,D)and the USA Standard ASAE S 211. ...(HA, HB, HC, HD). The RMA/MPTA standard applies for the use of Kraftbands in mechanical engineering; the agricultural machinery standard ASAE S 211. ...applies when using Kraftbands in agricultural machinery. Despite the different section designation, the belt cross sections are identical in both standards.

The pulleys are standardised according to ISO 5291.

### Optibelt-KB Kraftband SPZ, SPA, SPB and SPC

Optibelt KB Kraftbands are employed for extreme shock loads, large centre distances in combination with comparatively small pulley diameters and vertical drives. They are used for coupling drives and for conveying works. With the same power transmission, the Kraftband offers better running properties and/or safety.

Optibelt Kraftbands with sections SPZ, SPA and SPC can be applied in standard V-grooved pulleys according to DIN 2211 and ISO 4183.

### Drive Calculation

Drives using Optibelt-KB Kraftbands in mechanical engineering are to be fitted as shown in the calculation examples on pages 78 to 80 of this manual using the power ratings of the relevant belt sections. In ISO 5290, the nominal top width of the pulley groove is specified as the base value. The position of the datum diameter is given as an approximate value. For the geometric and power calculation, the outside diameter is used. Small computational differences in rotational frequency and speed ratio have no practical effect.

For Kraftbands with classical V-belts, as a rule, the calculation uses the datum diameter as well. The power ratings correspond to the sections of the classical V-belts.

For conversion factors for Optibelt-KB Kraftbands, see page 142.

**Drives on agricultural machinery employ special design calculations and methods. We, therefore, request that you send us your technical details.**

Kraftband sets must be used for drives with more than 5 ribs. The following combinations should be used.

*Table 6*

| No. of ribs | Kraftband combination |
|---|---|
| 2 | 2 |
| 3 | 3 |
| 4 | 4 |
| 5 | 5 |
| 6 | 3/3 |
| 7 | 3/4 |
| 7 | 4/4 |
| 9 | 5/4 |
| 10 | 5/5 |
| 11 | 4/3/4 |
| 12 | 4/4/4 |
| 13 | 4/5/4 |
| 14 | 5/4/5 |
| 15 | 5/5/5 |
| 16 | 4/4/4/4 |
| 17 | 4/4/5/4 |
| 18 | 5/4/4/5 |
| 19 | 5/4/5/5 |
| 20 | 5/5/5/5 |
| 21 | 4/4/5/4/4 |
| 22 | 5/4/4/4/5 |
| 23 | 5/4/5/4/5 |
| 24 | 5/5/4/5/5 |
| 25 | 5/5/5/5/5 |
| 26 | 5/4/4/4/4/5 |
| 27 | 5/5/4/4/4/5 |
| 28 | 5/5/4/4/5/5 |
| 29 | 5/5/5/4/5/5 |
| 30 | 5/5/5/5/5/5 |
| 31 | 5/4/4/5/4/4/5 |
| 32 | 5/5/4/4/4/5/5 |
| 33 | 5/5/5/4/4/5/5 |
| 34 | 5/5/5/4/5/5/5 |
| 35 | 5/5/5/5/5/5/5 |
| 36 | 5/5/4/4/4/4/5/5 |
| 37 | 5/5/5/4/4/4/5/5 |
| 38 | 5/5/5/4/4/5/5/5 |
| 39 | 5/5/5/5/4/5/5/5 |
| 40 | 5/5/5/5/5/5/5/5 |

### Ordering Example

The drive of a mill is equipped with Optibelt KB Kraftbands, size 5V 1600/15J 4064 mm $L_a$. It was calculated with 18 ribs. In total, 4 Kraftbands are required - 2 belts each with 4 ribs and 2 belts each with 5 ribs (see Table 6).

The order wording would then read:
1 set comprising 2 Optibelt KB Kraftbands 4-5V 1600/15J 4064 mm $L_a$ and 2 Optibelt KB Kraftbands 5-5V 1600/15J 4064 mm $L_a$.

4 or 5 = number of ribs
5V/15J = section
1600 = outside length in inches: 10
4064 = outside length in mm

# Standard Range

## optibelt *SUPER VX* and *SUPER DVX* Variable Speed Belts – raw edge – moulded cogged – DIN 7719/ISO 1604

### Optibelt Super VX Variable Speed Belts – raw edge – moulded cogged –

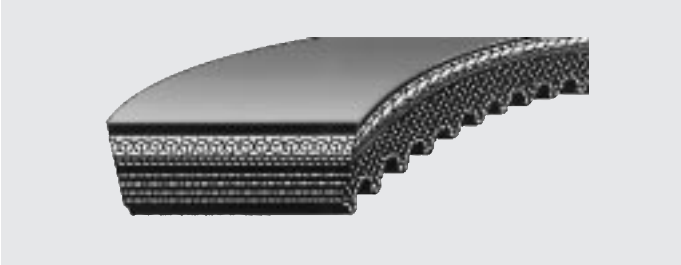

Rising demands made on the variable speed belt by the continuous increase in transmitted power led to the development of the raw edge, moulded cogged, variable speed belt.

The base compound consists of a chloroprene and rubber mixture filled with transversely oriented fibres. The high grade and exceptionally low stretch polyester or Aramid tension cord is embedded in a rubber cushioning compound. It is effectively supported by the reinforced base compound and by layers of compound impregnated fabric around the outside of the section. For exceptionally difficult drives layers of special cross cord material can be used between the base and cushion compounds.

The special properties of the raw edge, moulded cogged, variable speed belt are:

- high power transmission capability
- excellent flexibility in the direction of travel
- extreme transverse rigidity
- especially smooth running
- superior resistance to abrasion and slip
- long service life

**Sections**

Belt widths of 13 - 100 mm
Belt thicknesses of 5 - 25 mm

**Dimensions**

Lengths ranging from 500 to 5000 mm

Standardised dimensions to DIN/ISO and USA Standard RMA/MPTA

**Applications**

| | |
|---|---|
| industrial machinery | special drives |
| variable speed drives | compactors |
| printing machinery | multi-colour offset drives |
| gearboxes | variable diameter pulley sets |
| agricultural machinery | thresher drum drives |
| textile machinery | winding machinery |
| machine tools | lathes |
| automotive technology | snowmobile drives |

### Optibelt Super DVX Variable Speed Belts – raw edge – moulded double cogged –

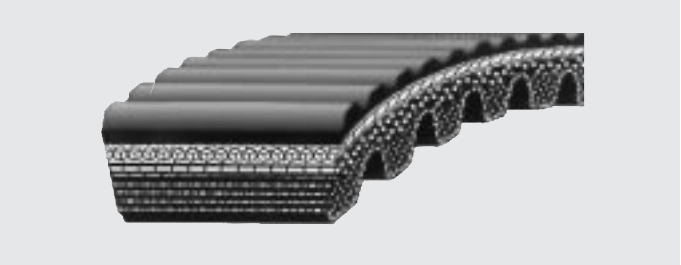

Further increases in demand on the performance of drive elements and the trend towards designing ever smaller, space saving drive units, led to the development of the double cogged, raw edge Optibelt Super DVX variable speed belt.

Double cogged Optibelt variable speed belts make it possible to employ the smallest diameter pulleys, even below Standard recommendations. The double cogged design improves heat dissipation thereby significantly reducing the belt running temperature. The production method and the structure of the belt have been derived from the raw edge Super VX variable speed belt. Depending upon the application, this belt can also be equipped with layers of special cross cord material in the base compound. The belt is double cogged, with the depth and spacing of the cogs matched to the specific belt section. The polyester or Aramid tension cord ensures ideal power transmission, increased service life, and extremely low stretch characteristics.

The features of the Super DVX variable speed belt can be summarised as follows:

- acceptance of extremely high axial forces
- high flexibility and low flex fatigue
- improved heat dissipation
- use with the smallest pulley diameters
- extremely smooth running at high belt speeds
- long service life

**Sections**

Belt widths of 20 - 85 mm
Belt thicknesses of 10 - 30 mm

**Dimensions**

Lengths ranging from 600 to 3500 mm

Sections and dimensions comparable to DIN/ISO

### Optibelt VS Variable Speed Belts – wrapped

The first generation variable speed belt was the Optibelt VS. In its design, the Optibelt VS is similar to the wrapped, classical V-belt or wedge belt.

This belt construction is still available.

**Sections and dimensions:** upon request

# Standard Range

## optibelt DK Double Section V-Belts

### Construction

A cross through the Optibelt DK double section V-belt reveals a hexagon made up of two congruent trapeziums. The neutral axis containing the tension cord is exactly half way up the.

Optibelt DK double section V-belts comprise:

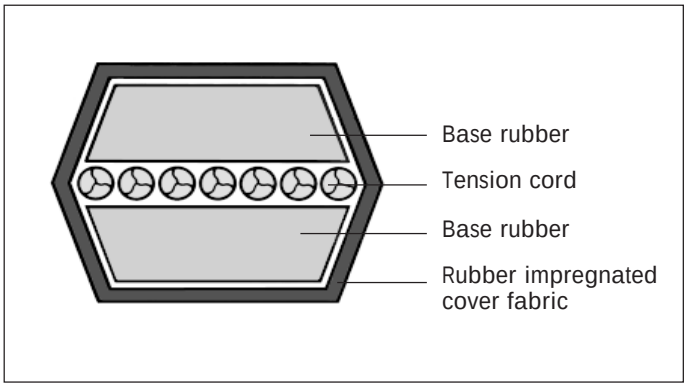


### Properties / Applications

The polyester tension cord positioned at the centre of the imparts extreme flexibility and low stretch properties to the Optibelt DK double section V-belt. The belt is therefore particularly suited for flexing in different directions in the same plane. Optibelt DK double section V-belts are used where several pulleys are arranged in one plane and the direction of rotation of one or more of the driven pulleys must be changed without crossing the belts. Because of the positioning of the tension cord in the neutral axis and the special shape of the double section V-belt, the tension cord is not subjected to any force other than tension unlike standard V-belts bent around an outside idler. The Optibelt DK double section V-belt comes into its own on typical serpentine arrangements. Special constructions are also possible. In the main, double section V-belts are used on agricultural machinery. They are, however, also finding increasing use in industrial machinery applications.

### Standardisation

The cross dimensions of the Optibelt DK double section V-belts correspond to DIN 7722 and ISO 5289.

These are thes HAA, HBB, HCC and HDD, that equate to the USA Standard ASAE S 211. ..., thereby ensuring an international interchange facility.

The effective / nominal length of the Optibelt DK double section V-belt is measured on the effective / outside diameter of the measured pulley. This length equates roughly to length of the belt at its widest part, the middle length.

Conversion factors are as follows:

Section AA / HAA effective length = middle length – 4 mm
Section BB / HBB effective length = middle length – 8 mm
Section CC / HCC effective length = middle length + 3 mm
Section DD / HDD effective length = middle length !

Experience has shown that, in practical use / ordering, these conversion factors can be ignored.

### Grooved Pulleys

No special pulleys are required for Optibelt DK double section V-belts. Pulleys conforming to ISO 4183, BS 3790,DIN 2211, DIN 2217 and ASAE S 211. ... are suitable.

Section AA / HAA in grooved pulleys for A / 13-SPA
Section BB / HBB in grooved pulleys for B / 17-SPB
Section CC / HCC in grooved pulleys for C / 22-SPC
Section DD / HDD in grooved pulleys for D / 32

### Special Sections

For special applications, we also supply double section V-belts withs 22 x 22 and 25 x 22. These are not standardised.

### Drive Calculation

Drive calculations for Optibelt DK double section V-belts differ from those given in this manual for two pulley drives. Multi pulley calculations are so complicated that they cannot be shown here.

Effective lengths, rotational speeds, transmission ratios and belt speeds are determined by the effective / outside pulley diameters.

Our engineers will be pleased to assist in the design of drives using Optibelt DK double section V-belts.

*Table 7*

| Section | DIN / ISO section | HAA | HBB | HCC | HDD | – | – |
|---|---|---|---|---|---|---|---|
| | Abreviated designation | AA | BB | CC | DD | 22 x 22 | 25 x 22 |
| Belt width | b ≈ | 13 | 17 | 22 | 32 | 22 | 25 |
| Belt height | h ≈ | 10 | 13 | 17 | 25 | 22 | 22 |
| Recommended minimum pulley datum diameter | $d_{a\ min}$ | 80 | 125 | 224 | 355 | 280 | 280 |
| Belt weight (kg / m) | ≈ | 0.150 | 0.250 | 0.440 | 0.935 | 0.511 | 0.625 |
| Max. belt speed (m / s) | $v_{max.}$ ≈ | 30 | | | | | |

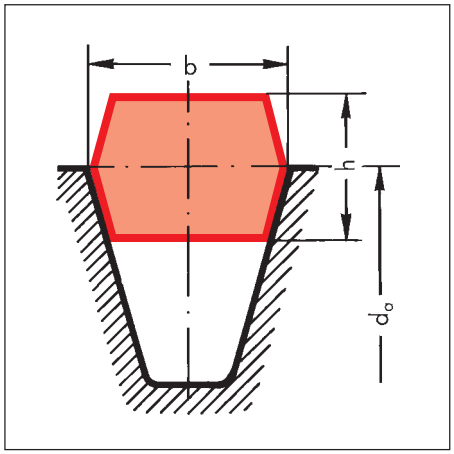

# Standard Properties

**According to the respective requirements, all Optibelt V-belts are manufactured using carefully selected basic materials and continuously updated technical procedures.**

**Regular routine checks during production, sophisticated lab tests and careful testing of the raw materials used guarantee a uniformly high level of quality that can be expected from every Optibelt drive element. Reliability and long service life are considered the most important criteria.**

### Oil Resistant

Oil resistance prevents damaging through mineral oils and mineral fats, insofar as those substances are not continuously and in great quantities in contact with the V-belts. Animal and vegetable fats as well as water-soluble cooling and cutting oils result in any case in a reduction of the service life. For higher concentrations, we recommend the use of our special constructions "05" and Super TX V-belts respectively.

### Heat Resistant

Standard V-Belts allow ambient temperatures of up to approximately + 70°C. Higher temperatures lead to a premature ageing and hardening of the V-belts. Therefore, we recommend in such cases the use of our special construction XHR. For details see page 17.

### Dust protection

Dust reduces the service life of V-belts enormously. Wear-resistant fabric covers make Optibel V-belts resistant to dust. This is demonstrated by its continual application in cement factories, mills, in the stone processing industries, and in the mining industry.

### M=S Matched Sets

This stands for raw-edge moulded cogged V-belts that can be used in a set without measuring.
Due to specific manufacturing techniques, extremely narrow length tolerances can be achieved so that V-belts of a nominal length can be optionally combined. A precise edging results in a smooth running operation. The even power transmission of all V-belts ensures a high efficiency and thus helps save energy. Set code numbers are not necessary, there is no set bundling. As a consequence, storage and costs can be reduced.

### S=C plus "SetConstant".

This stands for wrapped V-belts that can be used in a set without measuring.

**The advantages are the following:**

- Saves energy, high efficiency of approximately 97% more level transmission of performance
- disposes of the well-known narrow S=C plus tolerances: always by the nominal measure
- extremely low stretch
- longer service life
- Set code numbers are not required
- reduces vibrations
- requires only little adjustment
- reduces self-heating, thus ageing-resistant
- longer maintenance intervals

Example for S=C plus length tolerances for a high-performance wedge belt with 5000 mm datum length.

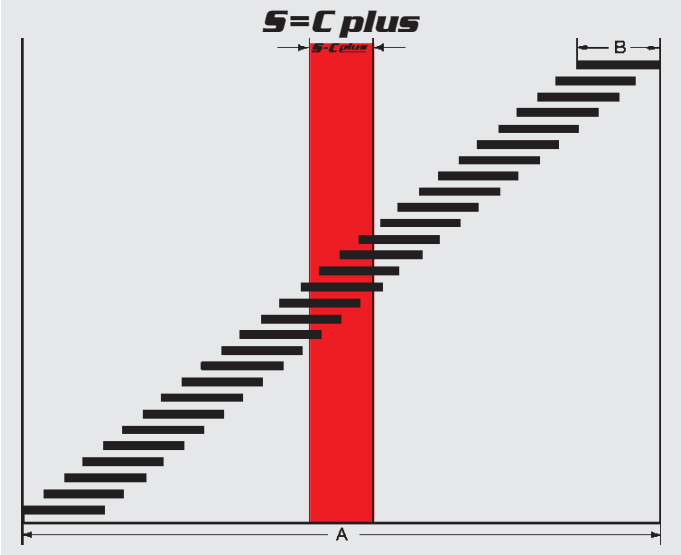


The dimension (A) is the tolerance permitted according to DIN of an individual V-belt with a length of 5000 mm. If you want to assemble sets for multi-groove drives, the individual elements may not show deviations of more than 6 mm (B) among each other.

The tolerance of the Optibelt S=C plus V-belt is considerably lower than the set tolerance permitted according to the standard.

S=C plus V-belts are always near the nominal length.

# Special Constructions

### Anti-Static

Optibelt V-belts do have anti-static properties. In the case of V-belts with inadequate antistatic properties, the electrostatic charge can be so high that there is a risk of ignition due to sparking. The use of anti-static belts requires a check of the required properties in accordance with ISO 1813. We present proof of the anti-static properties of the belts in the form of our final inspection certificate according to EN 10204 ”3.1.B”.

We charge an extra fee for this additional service. We strongly recommend your to order anti-static belts always separately.

### Extra Heat Resistant V-Belts, Special Construction XHR

The servicelife of standard Optibelt V-belts can be greatly reduced due to the effects of temperature.

In case of ambient temperatures that vary constantly between approx. + 70 °C up to approx. + 90 °C, we recommend our special construction XHR. Special rubber compounds largely prevent premature ageing and brittleness. In borderline cases, trials are recommended, as individual drive parameters such as belt speed and pulley diameter also have an influence on the belt life.

The following diagram illustrates the high degree to which the ambient temperature influences the service life of V-belts. It shows that the special construction XHR provides within the high-temperature range for a longer service life in comparison to the standard design. However, you cannot expect the same service life as under normal conditions. Alternatively you can also use Optibelt Super TX under these conditions.

### Extra Cold Resistant V-Belts Special Construction XCR

Minimum order quantities on request.

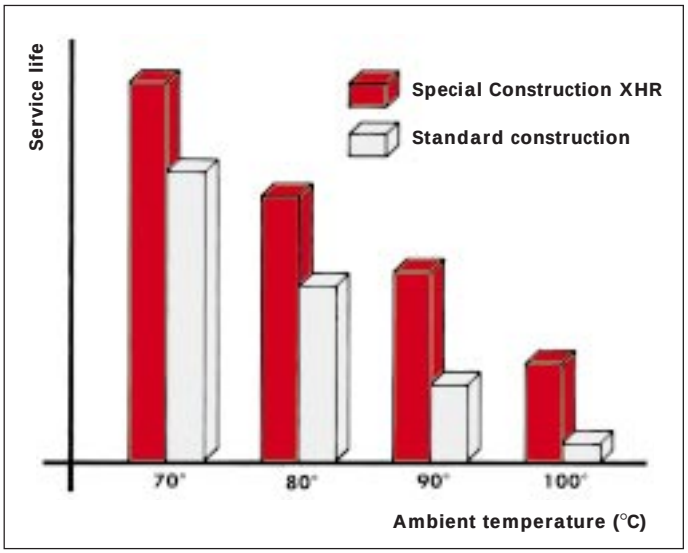


### Smooth Running Selected V-belts, Special Construction LR

Drives that have to fulfil high requirements with regard to smooth running - that is with variations of shaft centre distances - like for example lathes and grinders, and are supposed to guarantee a vibration free operation, may be equipped with Optibelt V-belts “selected smooth running”. Shaft centre distance fluctuations are measured electronically on test machines. The measurements comply with the Optibelt Works Standards or the conditions agreed with our customers.

### Mining Industry

Optibelt SK wedge belts and Optibelt VB classical V-belts are approved by the State Mining Office of North Rhine-Westphalia (LOBA NW) and the National Coal Board and can be used in underground mining as well as in spaces and areas above ground that are exposed to fire and explosion risks. Please request information on sections and lengths separately.

### Applications with Other Special Constructions

For particular applications such as general engineering machinery, agricultural machinery and horticulture, further special constructions are also available in intermediate sizes for

- special drives with tensioning, guide and idler pulleys
- coupling functions
- shock loads
- extreme operating conditions

These Optibelt V-belt special constructions can incorporate different tension cord types and arrangements with a variety of rubber mixtures, different fabric qualities and a differing number of fabric covers and top surface elements.

All special executions and intermediate lengths must be ordered in sets or in multiples thereof.

It is not possible to describe all criteria within the framework of these descriptions. For further information please contact our Applications Engineering Department.

optibelt
Power Transmission

# Standard Range

## optibelt SK Wedge Belts to BS 3790/DIN 7753 Part 1/ISO 4184

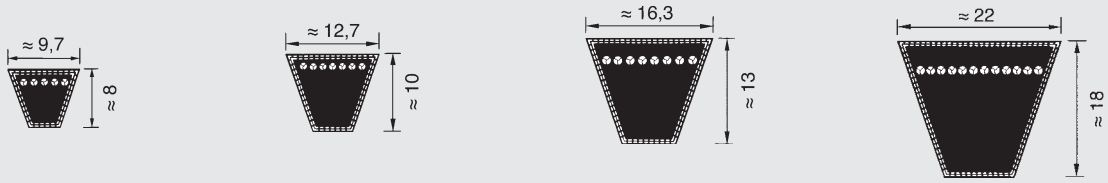


SPZ SPA SPB SPC

| Section SPZ | | | Section SPA | | | | Section SPB | Section SPC |
|---|---|---|---|---|---|---|---|---|
| Datum length ISO (mm) $L_d$ | | | Datum length ISO (mm) $L_d$ | | | | Datum length ISO (mm) $L_d$ | Datum length ISO (mm) $L_d$ |
| 487 | 1037 | **1637** | 732 | **1382** | **2120** | **3350** | **1250** | **2000** |
| 512 | 1047 | **1662** | 757 | **1400** | **2132** | **3382** | **1320** | **2120** |
| 562 | 1060 | **1687** | 782 | **1407** | **2182** | **3550** | **1400** | **2240** |
| 587 | 1077 | **1700** | 800 | **1432** | **2207** | **3750** | **1500** | **2360** |
| 612 | 1087 | **1737** | 807 | **1457** | **2232** | **4000** | **1600** | **2500** |
| 630 | 1112 | **1762** | 832 | **1482** | **2240** | **4250** | **1700** | **2650** |
| 637 | 1120 | **1787** | 850 | **1500** | **2282** | **4500** | **1800** | **2800** |
| 662 | 1137 | **1800** | 857 | **1507** | **2300** | | **1900** | **3000** |
| 670 | **1162** | **1812** | 882 | **1532** | **2307** | | **2000** | **3150** |
| 687 | **1180** | **1837** | 900 | **1557** | **2332** | | **2120** | **3350** |
| 710 | **1187** | **1862** | 907 | **1582** | **2360** | | **2240** | **3550** |
| 722 | **1202** | **1887** | 932 | **1600** | **2382** | | **2360** | **3750** |
| 737 | **1212** | **1900** | 950 | **1607** | **2432** | | **2500** | **4000** |
| 750 | **1237** | **1937** | 957 | **1632** | **2482** | | **2650** | **4250** |
| 762 | **1250** | **1987** | 982 | **1657** | **2500** | | **2800** | **4500** |
| 772 | **1262** | **2000** | 1000 | **1682** | **2532** | | **3000** | **4750** |
| 787 | **1287** | **2037** | 1007 | **1700** | **2582** | | **3150** | **5000** |
| 800 | **1312** | **2120** | 1032 | **1707** | **2607** | | **3250** | **5300** |
| 812 | **1320** | **2137** | 1060 | **1732** | **2632** | | **3350** | **5600** |
| 825 | **1337** | **2187** | 1082 | **1757** | **2650** | | **3550** | **6000** |
| 837 | **1347** | **2240** | 1107 | **1782** | **2682** | | **3750** | **6300** |
| 850 | **1362** | **2287** | 1120 | **1800** | **2732** | | **4000** | **6700** |
| 862 | **1387** | **2360** | 1132 | **1807** | **2782** | | **4250** | **7100** |
| 875 | **1400** | **2500** | 1157 | **1832** | **2800** | | **4500** | **7500** |
| 887 | **1412** | **2650** | 1180 | **1857** | **2832** | | **4750** | **8000** |
| 900 | **1437** | **2800** | **1207** | **1882** | **2847** | | **5000** | **8500** |
| 912 | **1462** | **3000** | **1232** | **1900** | **2882** | | **5300** | **9000** |
| 925 | **1487** | **3150** | **1250** | **1907** | **2932** | | **5600** | **9500** |
| 937 | **1500** | **3350** | **1257** | **1932** | **2982** | | **6000** | **10000** |
| 950 | **1512** | **3550** | **1272** | **1957** | **3000** | | **6300** | 10600 |
| 962 | **1537** | | **1282** | **1982** | **3032** | | **6700** | 11200 |
| 987 | **1562** | | **1307** | **2000** | **3082** | | **7100** | 12500 |
| 1000 | **1587** | | **1320** | **2032** | **3150** | | **7500** | |
| 1012 | **1600** | | **1332** | **2057** | **3182** | | **8000** | |
| 1024 | **1612** | | **1357** | **2082** | **3282** | | | |
| Maximum production length: 4 500 mm<br>Minimum order quantity:<br>Over 1800 mm =<br>20 belts for non standard lengths<br>60 belts for certain special constructions<br>Weight: ≈ 0.074 kg/m | | | Maximum production length: 4 500 mm<br>Minimum order quantity:<br>Over 1800 mm =<br>31 belts for standard lengths<br>93 belts for certain special constructions<br>Weight: ≈ 0.123 kg/m | | | | Max. production length: 10 000 mm<br>Minimum order quantity:<br>Over 1800 mm =<br>25 belts for standard lengths<br>75 belts for certain special constructions<br>Weight: ≈ 0.195 kg/m | Max. production length: 18 000 mm<br>Minimum order quantity:<br>Over 2000 mm =<br>16 belts for standard lengths<br>48 belts for certain special constructions<br>Weight: ≈ 0.377 kg/m |

Datum length ≙ pitch length.



Lengths in **bold print** are in the S=C plus range.

optibelt
Power Transmission

# Standard Range

## optibelt SK Wedge Belts to USA Standard RMA/MPTA

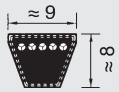


3V/9N

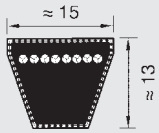


5V/15N

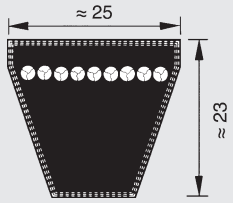


8V/25N

| Section 3V/9N | | Section 5V/15N | | Section 8V/25N | |
|---|---|---|---|---|---|
| Designation | Designation (outside length mm) $L_a$ | Designation | Designation (outside length mm) $L_a$ | Designation | Designation (outside length mm) $L_a$ |
| 3V 250 | 9N 635 | **5V 530** | **15N 1346** | **8V 1000** | **25N 2540** |
| 3V 265 | 9N 673 | **5V 560** | **15N 1422** | **8V 1120** | **25N 2845** |
| 3V 280 | 9N 711 | **5V 600** | **15N 1524** | **8V 1180** | **25N 2997** |
| 3V 300 | 9N 762 | **5V 630** | **15N 1600** | **8V 1250** | **25N 3175** |
| 3V 315 | 9N 800 | **5V 670** | **15N 1702** | **8V 1320** | **25N 3353** |
| 3V 335 | 9N 851 | **5V 710** | **15N 1803** | **8V 1400** | **25N 3556** |
| 3V 355 | 9N 902 | **5V 750** | **15N 1905** | **8V 1500** | **25N 3810** |
| 3V 375 | 9N 952 | **5V 800** | **15N 2032** | **8V 1600** | **25N 4064** |
| 3V 400 | 9N 1016 | **5V 850** | **15N 2159** | **8V 1700** | **25N 4318** |
| 3V 425 | 9N 1079 | **5V 900** | **15N 2286** | **8V 1800** | **25N 4572** |
| 3V 450 | 9N 1143 | **5V 950** | **15N 2413** | **8V 1900** | **25N 4826** |
| 3V 475 | 9N 1206 | **5V 1000** | **15N 2540** | **8V 2000** | **25N 5080** |
| **3V 500** | **9N 1270** | **5V 1060** | **15N 2692** | **8V 2120** | **25N 5385** |
| **3V 530** | **9N 1346** | **5V 1120** | **15N 2845** | **8V 2240** | **25N 5690** |
| **3V 560** | **9N 1422** | **5V 1180** | **15N 2997** | **8V 2360** | **25N 5994** |
| **3V 600** | **9N 1524** | **5V 1250** | **15N 3175** | **8V 2500** | **25N 6350** |
| **3V 630** | **9N 1600** | **5V 1320** | **15N 3353** | **8V 2650** | **25N 6731** |
| **3V 670** | **9N 1702** | **5V 1400** | **15N 3556** | **8V 2800** | **25N 7112** |
| **3V 710** | **9N 1803** | **5V 1500** | **15N 3810** | **8V 3000** | **25N 7620** |
| **3V 750** | **9N 1905** | **5V 1600** | **15N 4064** | **8V 3150** | **25N 8001** |
| **3V 800** | **9N 2032** | **5V 1700** | **15N 4318** | **8V 3350** | **25N 8509** |
| **3V 850** | **9N 2159** | **5V 1800** | **15N 4572** | **8V 3550** | **25N 9017** |
| **3V 900** | **9N 2286** | **5V 1900** | **15N 4826** | **8V 3750** | **25N 9525** |
| **3V 950** | **9N 2413** | **5V 2000** | **15N 5080** | 8V 4000 | 25N 10160 |
| **3V 1000** | **9N 2540** | **5V 2120** | **15N 5385** | 8V 4250 | 25N 10795 |
| **3V 1060** | **9N 2692** | **5V 2240** | **15N 5690** | 8V 4500 | 25N 11430 |
| **3V 1120** | **9N 2845** | **5V 2360** | **15N 5994** | 8V 4750 | 25N 12065 |
| **3V 1180** | **9N 2997** | **5V 2500** | **15N 6350** | 8V 5000 | 25N 12700 |
| **3V 1250** | **9N 3175** | **5V 2650** | **15N 6731** | | |
| **3V 1320** | **9N 3353** | **5V 2800** | **15N 7112** | | |
| **3V 1400** | **9N 3556** | **5V 3000** | **15N 7620** | | |
| | | **5V 3150** | **15N 8001** | | |
| | | **5V 3350** | **15N 8509** | | |
| | | **5V 3550** | **15N 9017** | | |

Maximum production length: 4 250 mm $L_a$
Minimum order quantity:
Over 1800 mm $L_a$ =
20 belts for non standard lengths
60 belts for certain special constructions
Weight: ≈ 0.074 kg/m

Maximum production length: 10 000 mm $L_a$
Minimum order quantity:
Over 1800 mm $L_a$ =
25 belts for non standard lengths
75 belts for certain special constructions
Weight: ≈ 0.195 kg/m

Maximum standard production length: 18 000 mm $L_a$
Over 18 000 to 19 000 mm on request
Minimum order quantity:
Over 2540 mm $L_a$ =
11 belts for non standard lengths
33 belts for certain special constructions
Weight: ≈ 0.575 kg/m

Lengths in **bold print** are in the S=C plus range.

optibelt
Power Transmission

# Standard Range

## optibelt *RED POWER II* High Performance Wedge Belt
## USA Standard RMA/MPTA

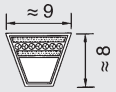


3V/9N

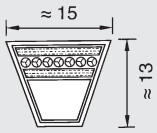


5V/15N

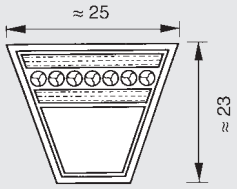


8V/25N

| Section 3V/9N | | Section 5V/15N | | Section 8V/25N | |
|---|---|---|---|---|---|
| Designation | Designation (outside length mm) $L_a$ | Designation | Designation (outside length mm) $L_a$ | Designation | Designation (outside length mm) $L_a$ |
| 3V 475 | 9N 1206 | 5V 530 | 15N 1346 | 8V 1000 | 25N 2540 |
| 3V 500 | 9N 1270 | 5V 560 | 15N 1422 | 8V 1120 | 25N 2845 |
| 3V 530 | 9N 1346 | 5V 600 | 15N 1524 | 8V 1180 | 25N 2997 |
| 3V 560 | 9N 1422 | 5V 630 | 15N 1600 | 8V 1250 | 25N 3175 |
| 3V 600 | 9N 1524 | 5V 670 | 15N 1702 | 8V 1320 | 25N 3353 |
| 3V 630 | 9N 1600 | 5V 710 | 15N 1803 | 8V 1400 | 25N 3556 |
| 3V 670 | 9N 1702 | 5V 750 | 15N 1905 | 8V 1500 | 25N 3810 |
| 3V 710 | 9N 1803 | 5V 800 | 15N 2032 | 8V 1600 | 25N 4064 |
| 3V 750 | 9N 1905 | 5V 850 | 15N 2159 | 8V 1700 | 25N 4318 |
| 3V 800 | 9N 2032 | 5V 900 | 15N 2286 | 8V 1800 | 25N 4572 |
| 3V 850 | 9N 2159 | 5V 950 | 15N 2413 | 8V 1900 | 25N 4826 |
| 3V 900 | 9N 2286 | 5V 1000 | 15N 2540 | 8V 2000 | 25N 5080 |
| 3V 950 | 9N 2413 | 5V 1060 | 15N 2692 | 8V 2120 | 25N 5385 |
| 3V 1000 | 9N 2540 | 5V 1120 | 15N 2845 | 8V 2240 | 25N 5690 |
| 3V 1060 | 9N 2692 | 5V 1180 | 15N 2997 | 8V 2360 | 25N 5994 |
| 3V 1120 | 9N 2845 | 5V 1250 | 15N 3175 | 8V 2500 | 25N 6350 |
| 3V 1180 | 9N 2997 | 5V 1320 | 15N 3353 | 8V 2650 | 25N 6731 |
| 3V 1250 | 9N 3175 | 5V 1400 | 15N 3556 | 8V 2800 | 25N 7112 |
| 3V 1320 | 9N 3353 | 5V 1500 | 15N 3810 | 8V 3000 | 25N 7620 |
| 3V 1400 | 9N 3556 | 5V 1600 | 15N 4064 | 8V 3150 | 25N 8001 |
| | | 5V 1700 | 15N 4318 | 8V 3350 | 25N 8509 |
| | | 5V 1800 | 15N 4572 | | |
| | | 5V 1900 | 15N 4826 | | |
| | | 5V 2000 | 15N 5080 | | |
| | | 5V 2120 | 15N 5385 | | |
| | | 5V 2240 | 15N 5690 | | |
| | | 5V 2360 | 15N 5994 | | |
| | | 5V 2500 | 15N 6350 | | |
| | | 5V 2650 | 15N 6731 | | |
| | | 5V 2800 | 15N 7112 | | |
| | | 5V 3000 | 15N 7620 | | |
| | | 5V 3150 | 15N 8001 | | |

Maximum production length: 4 000 mm $L_a$
Minimum order quantity:
1206 mm $L_a$ – 2032 mm $L_a$ =
80 belts for non standard lengths
Over 2032mm $L_a$ =
98 belts for non standard lengths

Weight: ≈ 0,074 kg/m

Maximum production length: 8 000 mm $L_a$
Minimum order quantity:
1270 mm $L_a$ – 2032 mm $L_a$ =
50 belts for non standard lengths
Over 2032 mm $L_a$ =
72 belts for non standard lengths

Weight: ≈ 0,195 kg/m

Maximum production length: 8 500 mm $L_a$
Minimum order quantity:
Over 2540 mm $L_a$ =
40 belts for non standard lengths

Weight: ≈ 0,575 kg/m



Lengths in **bold print** are in the S=C plus range.

optibelt
Power Transmission

# Standard Range

## optibelt *RED POWER II* High Performance Wedge Belt
## BS 3790/DIN 7753 Part 1/ISO 4184

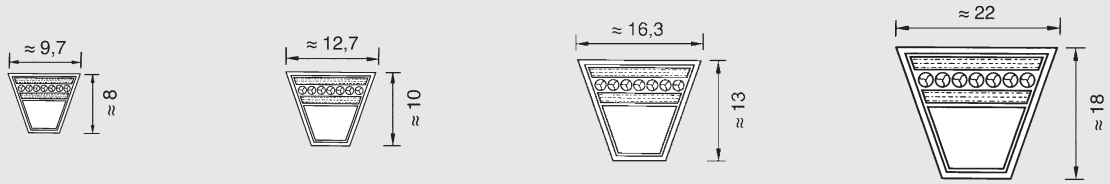


SPZ SPA SPB SPC

| Section SPZ | | | Section SPA | | | | Section SPB | Section SPC |
|---|---|---|---|---|---|---|---|---|
| Datum length ISO (mm) $L_d$ | | | Datum length ISO (mm) $L_d$ | | | | Datum length ISO (mm) $L_d$ | Datum length ISO (mm) $L_d$ |
| 1202 | 1587 | 2137 | 1207 | 1700 | 2282 | 3082 | 1250 | 2000 |
| 1212 | 1600 | 2187 | 1232 | 1707 | 2300 | 3150 | 1320 | 2120 |
| 1237 | 1612 | 2240 | 1250 | 1732 | 2307 | 3182 | 1400 | 2240 |
| 1250 | 1637 | 2287 | 1257 | 1757 | 2332 | 3282 | 1500 | 2360 |
| 1262 | 1662 | 2360 | 1282 | 1782 | 2360 | 3350 | 1600 | 2500 |
| 1287 | 1687 | 2500 | 1307 | 1800 | 2382 | 3382 | 1700 | 2650 |
| 1312 | 1700 | 2650 | 1320 | 1807 | 2432 | 3550 | 1800 | 2800 |
| 1320 | 1737 | 2800 | 1332 | 1832 | 2482 | 3750 | 1900 | 3000 |
| 1337 | 1762 | 3000 | 1357 | 1857 | 2500 | 4000 | 2000 | 3150 |
| 1362 | 1787 | 3150 | 1382 | 1882 | 2532 | | 2120 | 3350 |
| 1387 | 1800 | 3350 | 1400 | 1900 | 2582 | | 2240 | 3550 |
| 1400 | 1837 | 3550 | 1407 | 1907 | 2607 | | 2360 | 3750 |
| 1412 | 1862 | | 1432 | 1932 | 2632 | | 2500 | 4000 |
| 1437 | 1887 | | 1457 | 1957 | 2650 | | 2650 | 4250 |
| 1462 | 1900 | | 1482 | 1982 | 2682 | | 2800 | 4500 |
| 1487 | 1937 | | 1500 | 2000 | 2732 | | 3000 | 4750 |
| 1500 | 1987 | | 1507 | 2032 | 2782 | | 3150 | 5000 |
| 1512 | 2000 | | 1532 | 2057 | 2800 | | 3350 | 5300 |
| 1537 | 2037 | | 1557 | 2082 | 2832 | | 3550 | 5600 |
| 1562 | 2120 | | 1582 | 2120 | 2847 | | 3750 | 6000 |
| | | | 1600 | 2132 | 2882 | | 4000 | 6300 |
| | | | 1607 | 2182 | 2932 | | 4250 | 6700 |
| | | | 1632 | 2207 | 2982 | | 4500 | 7100 |
| | | | 1657 | 2232 | 3000 | | 4750 | 7500 |
| | | | 1682 | 2240 | 3032 | | 5000 | 8000 |
| | | | | | | | 5300 | |
| | | | | | | | 5600 | |
| | | | | | | | 6000 | |
| | | | | | | | 6300 | |
| | | | | | | | 6700 | |
| | | | | | | | 7100 | |
| | | | | | | | 7500 | |
| | | | | | | | 8000 | |
| Maximum production length: 4 000 mm<br>Minimum order quantity:<br>1202 mm – 2120 mm =<br>76 belts for non standard lengths<br>Over 2120 mm =<br>70 belts for non standard lengths<br>Weight: ≈ 0,074 kg/m | | | Maximum production length: 4 000 mm<br>Minimum order quantity:<br>1207 mm – 2120 mm =<br>62 belts for non standard lengths<br>Over 2120 mm =<br>78 belts for non standard lengths<br>Weight: ≈ 0,123 kg/m | | | | Max. prod. length: 8 000 mm<br>Minimum order quantity:<br>1250 mm – 2120 mm =<br>50 belts for non standard lengths<br>Over 2120 mm =<br>72 belts for non standard lengths<br>Weight: ≈ 0,195 kg/m | Max. prod. length: 8 000 mm<br>Minimum order quantity:<br>Over 2000 mm =<br>44 belts for non standard lengths<br>Weight: ≈ 0,377 kg/m |

Datum length $L_d$ ≙ pitch length $L_w/L_p$.

Lengths in **bold print** are in the S=C plus range.

optibelt
Power Transmission

# Standard Range

## optibelt *VB* Classical V-Belts to DIN 2215/ISO 4184

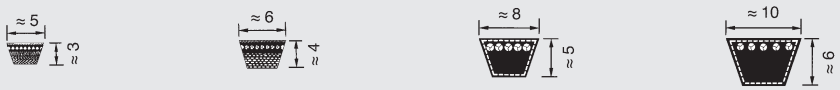


5 | Y/6 | 8 | Z/10

| Section 5* | | Section Y/6* | | Section 8 | | Section Z/10 | | | | | | | | |
|---|---|---|---|---|---|---|---|---|---|---|---|---|---|---|
| Datum length ISO $L_d$ (mm) | Inside length $L_i$ (mm) | Datum length ISO $L_d$ (mm) | Inside length $L_i$ (mm) | Datum length ISO $L_d$ (mm) | Inside length $L_i$ (mm) | Belt No. | Datum length ISO $L_d$ (mm) | Inside length $L_i$ (mm) | Belt No. | Datum length ISO $L_d$ (mm) | Inside length $L_i$ (mm) | Belt No. | Datum length ISO $L_d$ (mm) | Inside length $L_i$ (mm) |
| 200 | 190 | 295 | 280 | 335* | 315* | Z 11 | 312* | 290* | Z 38 1/2 | 997 | 975 | **Z 68** | **1747** | **1725** |
| 239 | 229 | 315 | 300 | 375* | 355* | Z 12 1/2 | 337* | 315* | Z 39 | 1022 | 1000 | **Z 69** | **1772** | **1750** |
| 270 | 260 | 350 | 335 | 420* | 400* | Z 14 | 397* | 375* | Z 40 | 1038 | 1016 | **Z 70** | **1797** | **1775** |
| 290 | 280 | 415 | 400 | 445* | 425* | Z 15 | 422* | 400* | Z 40 1/2 | 1052 | 1030 | **Z 71** | **1822** | **1800** |
| 310 | 300 | 440 | 425 | 470* | 450* | Z 16 | 447* | 425* | Z 41 | 1063 | 1041 | **Z 73** | **1872** | **1850** |
| 325 | 315 | 465 | 450 | 495* | 475* | Z 17 | 472* | 450* | Z 41 1/2 | 1072 | 1050 | **Z 75** | **1922** | **1900** |
| 332 | 322 | 515 | 500 | 510* | 490* | Z 18 | 497* | 475* | Z 42 | 1082 | 1060 | **Z 78** | **1997** | **1975** |
| 345 | 335 | 555 | 540 | 550* | 530* | Z 19 | 502* | 480* | Z 43 | 1102 | 1080 | **Z 79** | **2022** | **2000** |
| 385 | 375 | 615 | 600 | 580* | 560* | Z 19 3/4 | 522* | 500* | Z 43 1/4 | 1122 | 1100 | **Z 83 1/2** | **2142** | **2120** |
| 435 | 425 | 865 | 850 | 595* | 575* | Z 20 | 537* | 515* | Z 44 | 1142 | 1120 | **Z 88** | **2262** | **2240** |
| 485 | 475 | | | 620* | 600* | Z 20 1/2 | 547* | 525* | Z 45 | 1172 | 1150 | **Z 93** | **2382** | **2360** |
| 510 | 500 | | | 650* | 630* | Z 21 | 552* | 530* | Z 46 | 1187 | 1165 | **Z 98** | **2522** | **2500** |
| 540 | 530 | | | 690* | 670* | Z 21 1/4 | 562* | 540* | Z 46 1/2 | 1202 | 1180 | | | |
| 564 | 554 | | | 720* | 700* | Z 22 | 582* | 560* | Z 47 | 1216 | 1194 | | | |
| 610 | 600 | | | 730* | 710* | Z 23 | 597 | 575 | Z 48 | 1237 | 1215 | | | |
| | | | | 770* | 750* | Z 24 | 622 | 600 | Z 48 1/2 | 1247 | 1225 | | | |
| | | | | 795* | 775* | Z 25 | 652 | 630 | Z 49 | 1272 | 1250 | | | |
| | | | | 820* | 800* | Z 26 | 672 | 650 | Z 50 | 1292 | 1270 | | | |
| | | | | 845 | 825 | Z 27 | 692 | 670 | Z 51 | 1317 | 1295 | | | |
| | | | | 870 | 850 | Z 27 1/2 | 722 | 700 | Z 52 | 1342 | 1320 | | | |
| | | | | 895 | 875 | Z 28 | 732 | 710 | Z 53 | 1368 | 1346 | | | |
| | | | | 920 | 900 | Z 28 1/2 | 747 | 725 | Z 54 | 1393 | 1371 | | | |
| | | | | 970 | 950 | Z 29 | 752 | 730 | Z 55 | 1422 | 1400 | | | |
| | | | | 1020 | 1000 | Z 29 1/2 | 772 | 750 | Z 56 | 1444 | 1422 | | | |
| | | | | 1040 | 1020 | Z 30 | 787 | 765 | Z 57 | 1472 | 1450 | | | |
| | | | | 1070 | 1050 | Z 31 | 797 | 775 | Z 58 | 1497 | 1475 | | | |
| | | | | 1095 | 1075 | Z 31 1/2 | 822 | 800 | Z 59 | 1522 | 1500 | | | |
| | | | | 1140 | 1120 | Z 32 | 842 | 820 | Z 60 | 1546 | 1524 | | | |
| | | | | 1220 | 1200 | Z 33 | 847 | 825 | **Z 61** | **1572** | **1550** | | | |
| | | | | 1270 | 1250 | Z 33 1/2 | 872 | 850 | **Z 62** | **1597** | **1575** | | | |
| | | | | | | Z 34 | 887 | 865 | **Z 63** | **1622** | **1600** | | | |
| | | | | | | Z 35 | 897 | 875 | **Z 64** | **1648** | **1626** | | | |
| | | | | | | Z 36 | 922 | 900 | **Z 65** | **1673** | **1651** | | | |
| | | | | | | Z 37 | 947 | 925 | **Z 66** | **1697** | **1675** | | | |
| | | | | | | Z 38 | 972 | 950 | **Z 67** | **1722** | **1700** | | | |
| Other sizes on request<br>Weight: ≈ 0,018 kg/m | | Other sizes on request<br>Weight: ≈ 0,026 kg/m | | Weight: ≈ 0,042 kg/m | | Maximum production length: 4 500 mm<br>Minimum order quantity:<br>Over 1800 mm =<br>20 belts for non standard lengths<br>60 belts for certain special constructions<br>Weight: ≈ 0,064 kg/m | | | | | | | | |

Datum length ≙ pitch length. *** raw edge, moulded cogged V-belts.** Other sizes on request.



Lengths in **bold print** are in the S=C plus range.

optibelt
Power Transmission

# Standard Range

## optibelt *VB* Classical V-Belts to DIN 2215/ISO 4184

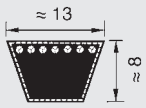


**A/13**

### Section A/13

| Belt No. | Datum length ISO $L_d$ (mm) | Inside length $L_i$ (mm) | Belt No. | Datum length ISO $L_d$ (mm) | Inside length $L_i$ (mm) | Belt No. | Datum length ISO $L_d$ (mm) | Inside length $L_i$ (mm) | Belt No. | Datum length ISO $L_d$ (mm) | Inside length $L_i$ (mm) |
|---|---|---|---|---|---|---|---|---|---|---|---|
| A 16 | 437 | 407 | A 41 | 1071 | 1041 | A 69 | 1780 | 1750 | A 105 | 2697 | 2667 |
| A 18 | 487 | 457 | A 41 1/2 | 1080 | 1050 | A 70 | 1805 | 1775 | A 107 | 2755 | 2725 |
| A 19 | 510 | 480 | A 42 | 1090 | 1060 | A 71 | 1830 | 1800 | A 108 | 2773 | 2743 |
| A 20 | 538 | 508 | A 42 1/2 | 1105 | 1075 | A 72 | 1855 | 1825 | A 110 | 2830 | 2800 |
| A 21 | 565 | 535 | A 43 | 1130 | 1100 | A 73 | 1884 | 1854 | A 112 | 2875 | 2845 |
| A 22 | 590 | 560 | A 43 1/2 | 1135 | 1105 | A 74 | 1910 | 1880 | A 114 | 2926 | 2896 |
| A 23 | 605 | 575 | A 44 | 1150 | 1120 | A 75 | 1930 | 1900 | A 116 | 2976 | 2946 |
| A 23 1/2 | 630 | 600 | A 45 | 1173 | 1143 | A 76 | 1960 | 1930 | A 118 | 3030 | 3000 |
| A 24 | 640 | 610 | A 45 1/2 | 1180 | 1150 | A 77 | 1986 | 1956 | A 120 | 3078 | 3048 |
| A 25 | 660 | 630 | A 46 | 1198 | 1168 | A 78 | 2010 | 1980 | A 124 | 3180 | 3150 |
| A 26 | 680 | 650 | A 46 1/2 | 1210 | 1180 | A 79 | 2030 | 2000 | A 128 | 3280 | 3250 |
| A 26 1/2 | 700 | 670 | A 47 | 1230 | 1200 | A 80 | 2062 | 2032 | A 132 | 3380 | 3350 |
| A 27 | 716 | 686 | A 47 1/2 | 1245 | 1215 | A 81 | 2090 | 2060 | A 136 | 3484 | 3454 |
| A 27 1/2 | 730 | 700 | A 48 | 1250 | 1220 | A 82 | 2113 | 2083 | A 140 | 3580 | 3550 |
| A 28 | 740 | 710 | A 48 1/2 | 1255 | 1225 | A 83 | 2130 | 2100 | A 144 | 3688 | 3658 |
| A 29 | 760 | 730 | A 49 | 1280 | 1250 | A 83 1/2 | 2150 | 2120 | A 148 | 3780 | 3750 |
| A 29 1/2 | 780 | 750 | A 50 | 1300 | 1270 | A 84 | 2164 | 2134 | A 158 | 4030 | 4000 |
| A 30 | 797 | 767 | A 51 | 1330 | 1300 | A 84 1/2 | 2180 | 2150 | A 167 | 4280 | 4250 |
| A 31 | 805 | 775 | A 52 | 1350 | 1320 | A 85 | 2190 | 2160 | A 187 | 4780 | 4750 |
| A 31 1/2 | 830 | 800 | A 53 | 1380 | 1350 | A 86 | 2230 | 2200 | A 197 | 5030 | 5000 |
| A 32 | 843 | 813 | A 54 | 1405 | 1375 | A 87 | 2240 | 2210 | | | |
| A 32 1/2 | 855 | 825 | A 55 | 1430 | 1400 | A 88 | 2270 | 2240 | | | |
| A 33 | 871 | 841 | A 56 | 1452 | 1422 | A 89 | 2291 | 2261 | | | |
| A 34 | 880 | 850 | A 57 | 1480 | 1450 | A 90 | 2316 | 2286 | | | |
| A 34 1/2 | 905 | 875 | A 58 | 1505 | 1475 | A 91 | 2341 | 2311 | | | |
| A 35 | 919 | 889 | A 59 | 1530 | 1500 | A 92 | 2367 | 2337 | | | |
| A 35 1/2 | 930 | 900 | A 60 | 1555 | 1525 | A 93 | 2390 | 2360 | | | |
| A 36 | 944 | 914 | A 61 | 1580 | 1550 | A 94 | 2418 | 2388 | | | |
| A 37 | 955 | 925 | A 62 | 1605 | 1575 | A 95 | 2443 | 2413 | | | |
| A 37 1/2 | 980 | 950 | A 63 | 1630 | 1600 | A 96 | 2468 | 2438 | | | |
| A 38 | 995 | 965 | A 64 | 1655 | 1625 | A 97 | 2494 | 2464 | | | |
| A 38 1/2 | 1005 | 975 | A 65 | 1680 | 1650 | A 98 | 2530 | 2500 | | | |
| A 39 | 1030 | 1000 | A 66 | 1706 | 1676 | A 100 | 2570 | 2540 | | | |
| A 40 | 1046 | 1016 | A 67 | 1730 | 1700 | A 102 | 2621 | 2591 | | | |
| A 40 1/2 | 1060 | 1030 | A 68 | 1755 | 1725 | A 104 | 2680 | 2650 | | | |

Maximum production length: 10 000 mm
Minimum order quantity:
Over 1800 mm =
31 belts for non standard lengths
93 belts for certain special constructions

Weight: ≈ 0,109 kg/m

Datum length ≙ pitch length. Other sizes on request.

Lengths in **bold print** are in the S=C plus range.

optibelt
Power Transmission

# Standard Range

## optibelt *VB* Classical V-Belts to DIN 2215/ISO 4184

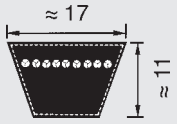


**B/17**

### Section B/17

| Belt No. | Datum length ISO $L_d$ (mm) | Inside length $L_i$ (mm) | Belt No. | Datum length ISO $L_d$ (mm) | Inside length $L_i$ (mm) | Belt No. | Datum length ISO $L_d$ (mm) | Inside length $L_i$ (mm) | Belt No. | Datum length ISO $L_d$ (mm) | Inside length $L_i$ (mm) |
|---|---|---|---|---|---|---|---|---|---|---|---|
| B 23 | 610 | 570 | **B 51** | **1340** | **1300** | **B 87** | **2250** | **2210** | **B 140** | **3590** | **3550** |
| B 24 | 655 | 615 | **B 52** | **1360** | **1320** | **B 88** | **2280** | **2240** | **B 142** | **3640** | **3600** |
| B 25 | 670 | 630 | **B 52½** | **1375** | **1335** | **B 89** | **2301** | **2261** | **B 144** | **3698** | **3658** |
| B 26 | 690 | 650 | **B 53** | **1390** | **1350** | **B 90** | **2326** | **2286** | **B 146** | **3740** | **3700** |
| B 26½ | 710 | 670 | **B 53½** | **1400** | **1360** | **B 91** | **2340** | **2300** | **B 148** | **3790** | **3750** |
| B 27 | 726 | 686 | **B 54** | **1412** | **1372** | **B 92** | **2377** | **2337** | **B 150** | **3850** | **3810** |
| B 28 | 750 | 710 | **B 55** | **1440** | **1400** | **B 93** | **2400** | **2360** | **B 151** | **3890** | **3850** |
| B 29 | 765 | 725 | **B 56** | **1462** | **1422** | **B 94** | **2428** | **2388** | **B 152** | **3901** | **3861** |
| B 30 | 790 | 750 | **B 57** | **1490** | **1450** | **B 94½** | **2440** | **2400** | **B 154** | **3952** | **3912** |
| B 31 | 815 | 775 | **B 58** | **1513** | **1473** | **B 95** | **2453** | **2413** | **B 155** | **3990** | **3950** |
| B 32 | 840 | 800 | **B 59** | **1540** | **1500** | **B 96** | **2478** | **2438** | **B 156** | **4002** | **3962** |
| B 32½ | 865 | 825 | **B 60** | **1565** | **1525** | **B 96½** | **2490** | **2450** | **B 158** | **4040** | **4000** |
| B 33 | 876 | 836 | **B 61** | **1590** | **1550** | **B 97** | **2505** | **2465** | **B 160** | **4104** | **4064** |
| B 34 | 890 | 850 | **B 62** | **1615** | **1575** | **B 98** | **2540** | **2500** | **B 162** | **4155** | **4115** |
| B 34½ | 915 | 875 | **B 63** | **1640** | **1600** | **B 99** | **2555** | **2515** | **B 165** | **4240** | **4200** |
| B 35 | 929 | 889 | **B 64** | **1665** | **1625** | **B 100** | **2580** | **2540** | **B 167** | **4290** | **4250** |
| B 36 | 940 | 900 | **B 65** | **1690** | **1650** | **B 101** | **2605** | **2565** | **B 173** | **4434** | **4394** |
| B 37 | 965 | 925 | **B 66** | **1716** | **1676** | **B 102** | **2640** | **2600** | **B 175** | **4490** | **4450** |
| B 37½ | 990 | 950 | **B 67** | **1740** | **1700** | **B 103** | **2656** | **2616** | **B 177** | **4540** | **4500** |
| B 38 | 1005 | 965 | **B 68** | **1765** | **1725** | **B 104** | **2690** | **2650** | **B 180** | **4612** | **4572** |
| B 38½ | 1015 | 975 | **B 69** | **1790** | **1750** | **B 105** | **2707** | **2667** | **B 187** | **4790** | **4750** |
| B 39 | 1040 | 1000 | **B 69½** | **1801** | **1761** | **B 106** | **2740** | **2700** | **B 195** | **4993** | **4953** |
| B 40 | 1056 | 1016 | **B 70** | **1815** | **1775** | **B 107** | **2758** | **2718** | **B 197** | **5040** | **5000** |
| B 40½ | 1070 | 1030 | **B 71** | **1840** | **1800** | **B 108** | **2790** | **2750** | **B 208** | **5340** | **5300** |
| B 41 | 1080 | 1040 | **B 72** | **1869** | **1829** | **B 110** | **2840** | **2800** | **B 210** | **5374** | **5334** |
| B 41½ | 1090 | 1050 | **B 73** | **1890** | **1850** | **B 112** | **2885** | **2845** | **B 220** | **5640** | **5600** |
| B 42 | 1100 | 1060 | **B 74** | **1920** | **1880** | **B 114** | **2940** | **2900** | **B 236** | **6040** | **6000** |
| B 42½ | 1115 | 1075 | **B 75** | **1940** | **1900** | **B 115** | **2961** | **2921** | **B 240** | **6136** | **6096** |
| B 43 | 1130 | 1090 | **B 76** | **1970** | **1930** | **B 116** | **2990** | **2950** | **B 248** | **6340** | **6300** |
| B 43¼ | 1140 | 1100 | **B 77** | **1990** | **1950** | **B 118** | **3040** | **3000** | **B 264** | **6740** | **6700** |
| B 44 | 1160 | 1120 | **B 78** | **2021** | **1981** | **B 120** | **3088** | **3048** | **B 276** | **7040** | **7000** |
| B 45 | 1190 | 1150 | **B 79** | **2040** | **2000** | **B 122** | **3139** | **3099** | **B 280** | **7140** | **7100** |
| B 45½ | 1203 | 1163 | **B 80** | **2072** | **2032** | **B 124** | **3190** | **3150** | | | |
| B 46 | 1215 | 1175 | **B 81** | **2100** | **2060** | **B 126** | **3240** | **3200** | | | |
| B 46½ | 1220 | 1180 | **B 82** | **2123** | **2083** | **B 128** | **3290** | **3250** | | | |
| **B 47** | **1240** | **1200** | B 83 | 2140 | 2100 | B 130 | 3342 | 3302 | | | |
| **B 48** | **1255** | **1215** | B 83½ | 2160 | 2120 | B 132 | 3390 | 3350 | | | |
| **B 48½** | **1265** | **1225** | B 84 | 2174 | 2134 | B 134 | 3444 | 3404 | | | |
| **B 49** | **1290** | **1250** | B 85 | 2200 | 2160 | B 136 | 3490 | 3450 | | | |
| **B 50** | **1315** | **1275** | B 86 | 2240 | 2200 | B 138 | 3545 | 3505 | | | |

Maximum production length: 15 500 mm
Minimum order quantity:
Over 1800 mm =
21 belts for non standard lengths
63 belts for certain special constructions

Weight: ≈ 0,196 kg/m

Datum length ≙ pitch length. Other sizes on request.



Lengths in **bold print** are in the S=C plus range.

optibelt
Power Transmission

# Standard Range

## optibelt *VB* Classical V-Belts to DIN 2215/ISO 4184

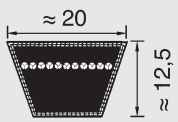


**20**

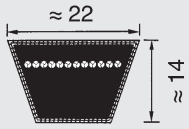


**C/22**

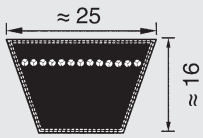


**25**

| Section 20 | | Section C/22 | | | | | | Section 25 | |
|---|---|---|---|---|---|---|---|---|---|
| Datum length ISO $L_d$ (mm) | Inside length $L_i$ (mm) | Belt No. | Datum length ISO $L_d$ (mm) | Inside length $L_i$ (mm) | Belt No. | Datum length ISO $L_d$ (mm) | Inside length $L_i$ (mm) | Datum length ISO $L_d$ (mm) | Inside length $L_i$ (mm) |
| 950 | 900 | C 43 | 1148 | 1090 | **C 102** | **2649** | **2591** | 1460 | 1400 |
| 1050 | 1000 | **C 47** | **1258** | **1200** | **C 104** | **2700** | **2642** | 1560 | 1500 |
| 1170 | 1120 | **C 48** | **1273** | **1215** | **C 105** | **2725** | **2667** | 1660 | 1600 |
| 1230 | 1180 | **C 49** | **1308** | **1250** | **C 106** | **2750** | **2692** | 1760 | 1700 |
| **1300** | **1250** | **C 51** | **1353** | **1295** | **C 108** | **2808** | **2750** | 1860 | 1800 |
| **1370** | **1320** | **C 52** | **1378** | **1320** | **C 110** | **2858** | **2800** | 1960 | 1900 |
| **1450** | **1400** | **C 53** | **1408** | **1350** | **C 112** | **2903** | **2845** | 2060 | 2000 |
| **1550** | **1500** | **C 54** | **1433** | **1375** | **C 114** | **2954** | **2896** | 2180 | 2120 |
| **1650** | **1600** | **C 55** | **1458** | **1450** | **C 115** | **2979** | **2921** | 2300 | 2240 |
| **1750** | **1700** | **C 56** | **1483** | **1425** | **C 116** | **3008** | **2950** | 2420 | 2360 |
| **1850** | **1800** | **C 57** | **1508** | **1450** | **C 117** | **3023** | **2965** | 2560 | 2500 |
| **1950** | **1900** | **C 58** | **1533** | **1475** | **C 118** | **3058** | **3000** | 2710 | 2650 |
| **2050** | **2000** | **C 59** | **1558** | **1500** | **C 120** | **3106** | **3048** | 2760 | 2700 |
| **2170** | **2120** | **C 60** | **1582** | **1524** | **C 122** | **3157** | **3099** | 2860 | 2800 |
| **2290** | **2240** | **C 61** | **1608** | **1550** | **C 124** | **3208** | **3150** | 3060 | 3000 |
| **2410** | **2360** | **C 62** | **1632** | **1574** | **C 126** | **3258** | **3200** | 3210 | 3150 |
| **2550** | **2500** | **C 63** | **1658** | **1600** | **C 128** | **3308** | **3250** | 3410 | 3350 |
| **2700** | **2650** | **C 65** | **1708** | **1650** | **C 130** | **3360** | **3302** | 3610 | 3550 |
| **2850** | **2800** | **C 66** | **1734** | **1676** | **C 132** | **3408** | **3350** | 3810 | 3750 |
| **3050** | **3000** | **C 67** | **1758** | **1700** | **C 134** | **3462** | **3404** | 4060 | 4000 |
| **3200** | **3150** | **C 68** | **1785** | **1727** | **C 136** | **3508** | **3450** | 4310 | 4250 |
| **3400** | **3350** | **C 69** | **1808** | **1750** | **C 138** | **3563** | **3505** | 4560 | 4500 |
| **3600** | **3550** | **C 70** | **1836** | **1778** | **C 140** | **3608** | **3550** | 4810 | 4750 |
| **3800** | **3750** | **C 71** | **1858** | **1800** | **C 142** | **3665** | **3607** | 5060 | 5000 |
| **4050** | **4000** | **C 72** | **1887** | **1829** | **C 144** | **3716** | **3658** | 5360 | 5300 |
| **4550** | **4500** | **C 73** | **1912** | **1854** | **C 146** | **3758** | **3700** | 5660 | 5600 |
| **5050** | **5000** | **C 74** | **1938** | **1880** | **C 148** | **3808** | **3750** | 6060 | 6000 |
| **6050** | **6000** | **C 75** | **1958** | **1900** | **C 150** | **3868** | **3810** | 6360 | 6300 |
| | | **C 76** | **1988** | **1930** | **C 158** | **4058** | **4000** | 6760 | 6700 |
| | | **C 77** | **2014** | **1956** | **C 162** | **4158** | **4100** | 7160 | 7100 |
| | | **C 78** | **2039** | **1981** | **C 166** | **4274** | **4216** | 7560 | 7500 |
| | | **C 79** | **2058** | **2000** | **C 167** | **4308** | **4250** | 8060 | 8000 |
| | | **C 80** | **2090** | **2032** | **C 168** | **4325** | **4267** | 8560 | 8500 |
| | | **C 81** | **2118** | **2060** | **C 170** | **4376** | **4318** | 9060 | 9000 |
| | | **C 82** | **2141** | **2083** | **C 173** | **4452** | **4394** | | |
| | | **C 83** | **2166** | **2108** | **C 175** | **4503** | **4445** | | |
| | | **C 83½** | **2178** | **2120** | **C 177** | **4558** | **4500** | | |
| | | **C 84** | **2192** | **2134** | **C 180** | **4630** | **4572** | | |
| | | **C 85** | **2217** | **2159** | **C 187** | **4808** | **4750** | | |
| | | **C 86** | **2242** | **2184** | **C 190** | **4884** | **4826** | | |
| | | **C 87** | **2268** | **2210** | **C 195** | **5011** | **4953** | | |
| | | **C 88** | **2298** | **2240** | **C 197** | **5058** | **5000** | | |
| | | **C 89** | **2319** | **2261** | **C 208** | **5358** | **5300** | | |
| | | **C 90** | **2344** | **2286** | **C 210** | **5392** | **5334** | | |
| | | **C 92** | **2395** | **2337** | **C 220** | **5658** | **5600** | | |
| | | **C 93** | **2418** | **2360** | **C 225** | **5773** | **5715** | | |
| | | **C 94** | **2446** | **2388** | **C 236** | **6058** | **6000** | | |
| | | **C 95** | **2471** | **2413** | **C 240** | **6154** | **6096** | | |
| | | **C 96** | **2496** | **2438** | **C 248** | **6358** | **6300** | | |
| | | **C 96½** | **2508** | **2450** | **C 264** | **6758** | **6700** | | |
| | | **C 97** | **2522** | **2464** | **C 270** | **6916** | **6858** | | |
| | | **C 98** | **2558** | **2500** | **C 280** | **7158** | **7100** | | |
| | | **C 99** | **2583** | **2525** | **C 295** | **7558** | **7500** | | |
| | | **C 100** | **2598** | **2540** | **C 300** | **7678** | **7620** | | |
| | | **C 101** | **2618** | **2560** | **C 315** | **8058** | **8000** | | |

Maximum production length:
10 000 mm
Minimum order quantity:
Over 1800 mm =
18 belts for non standard lengths
54 belts for certain special constructions
Weight: ≈ 0,266 kg/m

Maximum standard production length: 18 000 mm
Over 18 000 to 19 000 mm on request
Minimum order quantity:
Over 1800 mm =
16 belts for non standard lengths
48 belts for certain special constructions
Weight: ≈ 0,324 kg/m

Maximum standard production length:
18 000 mm
Over 18 000 to 19 000 mm
on request
Minimum order quantity:
Over 1800 mm =
14 belts for non standard lengths
42 belts for certain special constructions
Weight: ≈ 0,420 kg/m

Datum length ≙ pitch length. Other sizes on request.

Lengths in **bold print** are in the S=C plus range.

optibelt
Power Transmission

# Standard Range

## optibelt *VB* Classical V-Belts to DIN 2215/ISO 4184

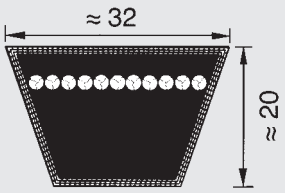


D/32

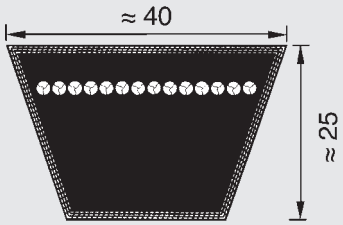


E/40

### Section D/32

| Belt No. | Datum length ISO $L_d$ (mm) | Inside length $L_i$ |
|---|---|---|
| **D 79** | **2075** | **2000** |
| **D 98** | **2575** | **2500** |
| **D 104** | **2725** | **2650** |
| **D 110** | **2875** | **2800** |
| **D 118** | **3075** | **3000** |
| **D 120** | **3123** | **3048** |
| **D 124** | **3225** | **3150** |
| **D 128** | **3326** | **3251** |
| **D 132** | **3425** | **3350** |
| **D 135** | **3500** | **3425** |
| **D 136** | **3529** | **3454** |
| **D 140** | **3625** | **3550** |
| **D 144** | **3733** | **3658** |
| **D 148** | **3825** | **3750** |
| **D 154** | **4000** | **3925** |
| **D 158** | **4075** | **4000** |
| **D 162** | **4190** | **4115** |
| **D 167** | **4325** | **4250** |
| **D 173** | **4469** | **4394** |
| **D 177** | **4575** | **4500** |
| **D 180** | **4647** | **4572** |
| **D 187** | **4825** | **4750** |
| **D 195** | **5028** | **4953** |
| **D 197** | **5075** | **5000** |
| **D 208** | **5375** | **5300** |
| **D 210** | **5409** | **5334** |
| **D 220** | **5675** | **5600** |
| **D 225** | **5790** | **5715** |
| **D 236** | **6075** | **6000** |
| **D 240** | **6171** | **6096** |
| **D 248** | **6375** | **6300** |
| **D 264** | **6775** | **6700** |
| **D 270** | **6933** | **6858** |
| **D 280** | **7175** | **7100** |
| **D 295** | **7575** | **7500** |
| **D 300** | **7695** | **7620** |
| **D 315** | **8075** | **8000** |
| **D 330** | **8457** | **8382** |
| **D 335** | **8575** | **8500** |
| **D 354** | **9075** | **9000** |
| **D 374** | **9575** | **9500** |
| **D 394** | **10075** | **10000** |
| D 441 | 11275 | 11200 |

Maximum standard production length: 18 000 mm
Over 18 000 to 19 000 mm on request
Minimum order quantity:
Over 2000 mm =
11 belts for non standard lengths
33 belts for certain special constructions

Weight: ≈ 0,668 kg/m

### Section E/40

| Belt No. | Datum length ISO $L_d$ (mm) | Inside length $L_i$ |
|---|---|---|
| **E 118** | **3080** | **3000** |
| **E 158** | **4080** | **4000** |
| **E 197** | **5080** | **5000** |
| **E 220** | **5680** | **5600** |
| **E 236** | **6080** | **6000** |
| **E 248** | **6380** | **6300** |
| **E 280** | **7180** | **7100** |
| **E 295** | **7580** | **7500** |
| **E 315** | **8080** | **8000** |
| **E 354** | **9080** | **9000** |
| **E 394** | **10080** | **10000** |
| E 441 | 11280 | 11200 |
| E 492 | 12580 | 12500 |

Maximum production length: 19 000 mm
Minimum order quantity for **all** sizes:
7 belts
21 belts for certain special constructions

Weight: ≈ 0,958 kg/m

Datum length ≙ pitch length. Other sizes on request.



Lengths in **bold print** are in the S=C plus range.

optibelt
Power Transmission

# Standard Range

## optibelt *SUPER TX M=S* Wedge Belts – Raw Edge, Moulded Cogged – DIN 7753 Part 1/ ISO 4184 and RMA/MPTA

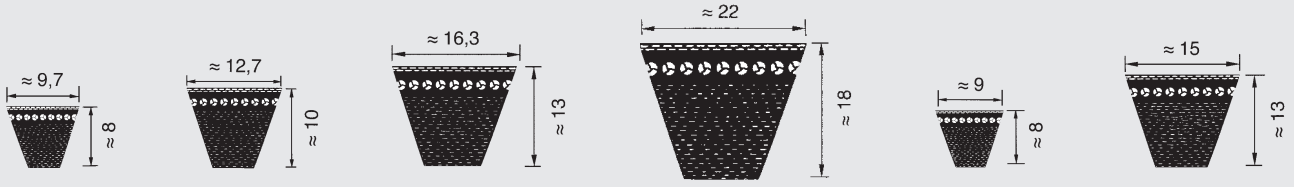


XPZ XPA XPB XPC 3VX/9NX 5VX/15NX

| Section XPZ | Section XPA | Section XPB | Section XPC | Section 3VX/9NX | | Section 5VX/15NX | |
|---|---|---|---|---|---|---|---|
| Datum length ISO $L_d$ (mm) | Datum length ISO $L_d$ (mm) | Datum length ISO $L_d$ (mm) | Datum length ISO $L_d$ (mm) | Designation | Designation $L_a$ (outside length mm) | Designation | Designation $L_a$ (outside length mm) |
| 587 | 732 | 1250 | 2000 | **3VX 250** | 9NX 635 | **5VX 500** | 15NX 1270 |
| 612 | 757 | 1320 | 2120 | **3VX 265** | 9NX 673 | **5VX 530** | 15NX 1346 |
| 630 | 782 | 1400 | 2240 | **3VX 280** | 9NX 711 | **5VX 560** | 15NX 1422 |
| 637 | 800 | 1500 | 2360 | **3VX 300** | 9NX 762 | **5VX 600** | 15NX 1524 |
| 662 | 807 | 1600 | 2500 | **3VX 315** | 9NX 800 | **5VX 630** | 15NX 1600 |
| 670 | 832 | 1700 | 2650 | **3VX 335** | 9NX 851 | **5VX 670** | 15NX 1702 |
| 687 | 850 | 1800 | 2800 | **3VX 355** | 9NX 902 | **5VX 710** | 15NX 1803 |
| 710 | 857 | 1900 | 3000 | **3VX 375** | 9NX 952 | **5VX 750** | 15NX 1905 |
| 737 | 882 | 2000 | 3150 | **3VX 400** | 9NX 1016 | **5VX 800** | 15NX 2032 |
| 750 | 900 | 2120 | 3350 | **3VX 425** | 9NX 1079 | **5VX 850** | 15NX 2159 |
| 762 | 907 | 2240 | 3550 | **3VX 450** | 9NX 1143 | **5VX 900** | 15NX 2286 |
| 772 | 932 | 2360 | | **3VX 475** | 9NX 1206 | **5VX 950** | 15NX 2413 |
| 787 | 950 | 2500 | | **3VX 500** | 9NX 1270 | **5VX 1000** | 15NX 2540 |
| 800 | 957 | 2650 | | **3VX 530** | 9NX 1346 | **5VX 1060** | 15NX 2692 |
| 812 | 982 | 2800 | | **3VX 560** | 9NX 1422 | **5VX 1120** | 15NX 2845 |
| 825 | 1000 | 3000 | | **3VX 600** | 9NX 1524 | **5VX 1180** | 15NX 2997 |
| 837 | 1007 | 3150 | | **3VX 630** | 9NX 1600 | **5VX 1250** | 15NX 3175 |
| 850 | 1030 | 3350 | | **3VX 670** | 9NX 1702 | **5VX 1320** | 15NX 3353 |
| 862 | 1060 | 3550 | | **3VX 710** | 9NX 1803 | **5VX 1400** | 15NX 3556 |
| 875 | 1082 | | | **3VX 750** | 9NX 1905 | | |
| 887 | 1107 | | | **3VX 800** | 9NX 2032 | | |
| 900 | 1120 | | | **3VX 850** | 9NX 2159 | | |
| 912 | 1132 | | | **3VX 900** | 9NX 2286 | | |
| 925 | 1157 | | | **3VX 950** | 9NX 2413 | | |
| 937 | 1180 | | | **3VX 1000** | 9NX 2540 | | |
| 950 | 1207 | | | **3VX 1060** | 9NX 2692 | | |
| 962 | 1232 | | | **3VX 1120** | 9NX 2845 | | |
| 987 | 1250 | | | **3VX 1180** | 9NX 2997 | | |
| 1000 | 1257 | | | **3VX 1250** | 9NX 3175 | | |
| 1012 | 1272 | | | **3VX 1320** | 9NX 3353 | | |
| 1037 | 1282 | | | **3VX 1400** | 9NX 3556 | | |
| 1060 | 1307 | | | | | | |
| 1077 | 1320 | | | | | | |
| 1087 | 1332 | | | | | | |
| 1112 | 1357 | | | | | | |
| 1120 | 1382 | | | | | | |
| 1137 | 1400 | | | | | | |
| 1162 | 1432 | | | | | | |
| 1180 | 1457 | | | | | | |
| 1187 | 1482 | | | | | | |
| Weight: ≈ 0,065 kg/m | Weight: ≈ 0,111 kg/m | Weight: ≈ 0,183 kg/m | Weight: ≈ 0,340 kg/m | Weight: ≈ 0,065 kg/m | | Weight: ≈ 0,183 kg/m | |

Datum length ≙ pitch length. Other sizes on request.

optibelt
Power Transmission

# Standard Range

## optibelt SUPER TX M=S V-Belt – Raw Edge, Moulded Cogged – to BS 3790/DIN 2215/ISO 4184

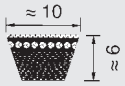


ZX/X10

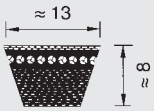


AX/X13

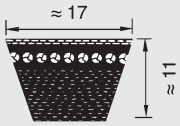


BX/X17

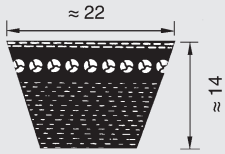


CX/X22

| Section ZX/X10 | | Section AX/X13 | | Section BX/X17 | | Section CX/X22 | |
|---|---|---|---|---|---|---|---|
| Belt No. | Datum length ISO $L_d$ (mm) | Belt No. | Datum length ISO $L_d$ (mm) | Belt No. | Datum length ISO $L_d$ (mm) | Belt No. | Datum length ISO $L_d$ (mm) |
| ZX 23 | 597 | AX 23 | 605 | BX 23 | 610 | CX 39 | 1058* |
| ZX 24 | 622 | AX 23½ | 630 | BX 25 | 670 | CX 43 | 1148* |
| ZX 25 | 652 | AX 24 | 640 | BX 26 | 690 | CX 49 | 1308* |
| ZX 26 | 672 | AX 25 | 660 | BX 28 | 750 | CX 52 | 1378* |
| ZX 27 | 692 | AX 26½ | 700 | BX 29 | 765 | CX 55 | 1458* |
| ZX 28 | 732 | AX 27 | 716 | BX 30 | 790 | CX 59 | 1558* |
| ZX 29 | 752 | AX 28 | 740 | BX 31 | 815 | CX 62 | 1632* |
| ZX 29½ | 772 | AX 29 | 760 | BX 32 | 840 | CX 67 | 1758* |
| ZX 31½ | 822 | AX 30 | 797 | BX 33 | 876 | CX 68 | 1758* |
| ZX 32 | 842 | AX 31 | 830 | BX 34 | 890 | CX 71 | 1858* |
| ZX 33 | 847 | AX 32 | 843 | BX 34½ | 915 | CX 75 | 1958* |
| ZX 33½ | 872 | AX 33 | 871 | BX 35 | 929 | CX 79 | 2058* |
| ZX 35 | 897 | AX 34 | 880 | BX 36 | 940 | CX 81 | 2118* |
| ZX 36 | 922 | AX 35 | 919 | BX 37 | 965 | CX 85 | 2217* |
| ZX 37 | 947 | AX 35½ | 930 | BX 38 | 1005 | CX 88 | 2298* |
| ZX 38 | 972 | AX 36 | 944 | BX 39 | 1040 | CX 90 | 2344* |
| ZX 40 | 1038* | AX 37 | 955 | BX 40 | 1056 | CX 93 | 2418* |
| ZX 42 | 1082* | AX 37½ | 980 | BX 41 | 1080 | CX 96 | 2496* |
| ZX 46½ | 1202* | AX 38 | 995 | BX 42 | 1100 | CX 98 | 2558* |
| ZX 52 | 1342* | AX 39 | 1030 | BX 43 | 1130 | CX 110 | 2858* |
| ZX 55 | 1422* | AX 40 | 1046 | BX 44 | 1160 | CX 118 | 3058* |
| ZX 59 | 1522* | AX 41½ | 1080 | BX 45 | 1190 | CX 124 | 3208* |
| | | AX 42 | 1090 | BX 45½ | 1203 | CX 132 | 3408* |
| | | AX 43 | 1130 | BX 46 | 1215 | | |
| | | AX 44 | 1150 | BX 46½ | 1220 | | |
| | | AX 45½ | 1180 | BX 47 | 1240 | | |
| | | AX 46 | 1198 | BX 48 | 1255 | | |
| | | AX 47 | 1230 | BX 49 | 1290 | | |
| | | AX 48 | 1250 | BX 50 | 1315 | | |
| | | AX 49 | 1280 | BX 51 | 1340 | | |
| | | AX 50 | 1300 | BX 52 | 1360 | | |
| | | AX 51 | 1330 | BX 53 | 1390 | | |
| | | AX 52 | 1350 | BX 54 | 1412 | | |
| | | AX 53 | 1380 | BX 55 | 1440 | | |
| | | AX 54 | 1405 | BX 57 | 1490 | | |
| | | AX 55 | 1430 | BX 58 | 1513 | | |
| | | AX 56 | 1452 | BX 59 | 1540 | | |
| | | AX 57 | 1480 | BX 61 | 1590 | | |
| | | AX 58 | 1505 | BX 62 | 1615 | | |
| | | AX 59 | 1530 | BX 63 | 1640 | | |
| | | AX 62 | 1605 | BX 67 | 1740 | | |
| | | AX 63 | 1630 | BX 69 | 1790 | | |
| | | AX 67 | 1730 | BX 71 | 1840 | | |
| | | AX 70 | 1805 | BX 73 | 1890 | | |
| | | AX 71 | 1830 | BX 75 | 1940 | | |
| | | AX 75 | 1930 | BX 79 | 2040 | | |
| | | AX 79 | 2030 | BX 88 | 2280 | | |
| | | AX 88 | 2270 | BX 93 | 2400 | | |
| | | AX 93 | 2390 | BX 98 | 2540 | | |
| | | AX 98 | 2530 | BX 103 | 2656* | | |
| | | AX 104 | 2680* | BX 104 | 2690* | | |
| | | AX 110 | 2830* | BX 110 | 2840* | | |
| | | AX 118 | 3030* | BX 118 | 3040* | | |
| | | AX 124 | 3180* | BX 124 | 3190* | | |
| | | AX 132 | 3380* | BX 132 | 3390* | | |
| Weight: ≈ 0,062 kg/m | | Weight: ≈ 0,099 kg/m | | Weight: ≈ 0,165 kg/m | | Weight: ≈ 0,276 kg/m | |

Datum length ≙ pitch length. Other sizes on request. *Non stock items.

# Standard Range

## optibelt *KB* Kraftbands with Wedge Belts to DIN / ISO

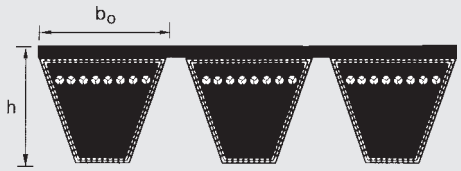


| Section | SPZ | SPA | SPB | SPC |
|---|---|---|---|---|
| $b_o \approx$ (mm) | 9,7 | 12,7 | 16,5 | 22,0 |
| h $\approx$ (mm) | 10,5 | 12,5 | 15,6 | 22,6 |

| Section SPZ | Section SPA | Section SPB | Section SPC |
|---|---|---|---|
| Datum length ISO $L_d$ (mm) | Datum length ISO $L_d$ (mm) | Datum length ISO $L_d$ (mm) | Datum length ISO $L_d$ (mm) |
| 1250 | 1250 | 2000 | 3000 |
| 1400 | 1400 | 2120 | 3150 |
| 1500 | 1500 | 2240 | 3350 |
| 1600 | 1600 | 2360 | 3550 |
| 1700 | 1700 | 2500 | 3750 |
| 1800 | 1800 | 2650 | 4000 |
| 1900 | 1900 | 2800 | 4250 |
| 2000 | 2000 | 3000 | 4500 |
| 2120 | 2120 | 3150 | 4750 |
| 2240 | 2240 | 3350 | 5000 |
| 2360 | 2360 | 3550 | 5300 |
| 2500 | 2500 | 3750 | 5600 |
| 2650 | 2650 | 4000 | 6000 |
| 2800 | 2800 | 4250 | 6300 |
| 3000 | 3000 | 4500 | 6700 |
| 3150 | 3150 | 4750 | 7100 |
| 3350 | 3350 | 5000 | 7500 |
| 3550 | 3550 | 5300 | 8000 |
| | 3750 | 5600 | 8500 |
| | 4000 | 6000 | 9000 |
| | 4250 | 6300 | 9500 |
| | 4500 | 6700 | 10000 |
| | | 7100 | 10600 |
| | | 7500 | 11200 |
| | | 8000 | 11800 |
| | | | 12500 |
| Maximum production length:<br>4500 mm $L_d$<br>Non standard lengths from 1800 mm $L_d$<br>**Minimum order quantity for special lengths:**<br>8 belts with 5 ribs or<br>10 belts with 4 ribs or<br>14 belts with 3 ribs or<br>21 belts with 2 ribs<br>or a multiple thereof<br>Weight: ≈ 0,120 kg/m per rib<br>**Minimum order quantities for Aramid belts on request.** | Maximum production length:<br>4500 mm $L_d$<br>Non standard lengths from 1800 mm $L_d$<br>**Minimum order quantity for all sizes:**<br>6 belts with 5 ribs or<br>8 belts with 4 ribs or<br>11 belts with 3 ribs or<br>16 belts with 2 ribs<br>or a multiple thereof<br>Weight: ≈ 0,166 kg/m per rib<br>**Minimum order quantities for Aramid belts on request.** | Maximum production length:<br>10000 mm $L_d$<br>Non standard lengths from 2000 mm $L_d$<br>**Minimum order quantity for special lengths:**<br>4 belts with 5 ribs or<br>5 belts with 4 ribs or<br>7 belts with 3 ribs or<br>11 belts with 2 ribs<br>or a multiple thereof<br>Weight: ≈ 0,261 kg/m per rib<br>**Minimum order quantities for Aramid belts on request.** | Maximum production length:<br>12500 mm $L_d$<br>Non standard lengths from 3000 mm $L_d$<br>**Minimum order quantity for all sizes:**<br>3 belts with 5 ribs or<br>4 belts with 4 ribs or<br>5 belts with 3 ribs or<br>8 belts with 2 ribs<br>or a multiple thereof<br>Weight: ≈ 0,555 kg/m per rib<br>**Minimum order quantities for Aramid belts on request.** |

Datum length ≙ pitch length. Other sizes on request.

optibelt
Power Transmission

# Standard Range

## optibelt *KB* Kraftbands with Wedge Belts to RMA/MPTA

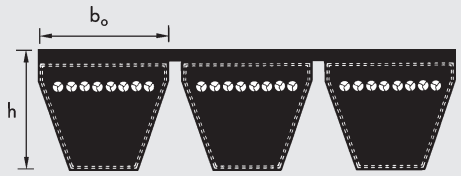


| Section | 3V/9J | 5V/15J | 8V/25J |
|---|---|---|---|
| $b_o \approx$ (mm) | 9,0 | 15,0 | 25,0 |
| h $\approx$ (mm) | 9,9 | 15,1 | 25,5 |

### Section 3V/9J

| Designation | Designation (outside length mm) $L_a$ |
|---|---|
| 3V 500 | 9J 1270 |
| 3V 530 | 9J 1346 |
| 3V 560 | 9J 1422 |
| 3V 600 | 9J 1524 |
| 3V 630 | 9J 1600 |
| 3V 670 | 9J 1702 |
| 3V 710 | 9J 1803 |
| 3V 750 | 9J 1905 |
| 3V 800 | 9J 2032 |
| 3V 850 | 9J 2159 |
| 3V 900 | 9J 2286 |
| 3V 950 | 9J 2413 |
| 3V 1000 | 9J 2540 |
| 3V 1060 | 9J 2692 |
| 3V 1120 | 9J 2845 |
| 3V 1180 | 9J 2997 |
| 3V 1250 | 9J 3175 |
| 3V 1320 | 9J 3353 |
| 3V 1400 | 9J 3556 |

Maximum production length: 4250 mm $L_a$
Non standard lengths from 1800 mm $L_a$
**Minimum order quantity for special lengths:**
9 belts with 5 ribs or
12 belts with 4 ribs or
16 belts with 3 ribs or
24 belts with 2 ribs
or a multiple thereof
Weight: ≈ 0,102 kg/m per rib
**Minimum order quantities for Aramid belts on request.**

### Section 5V/15J

| Designation | Designation (outside length mm) $L_a$ |
|---|---|
| 5V 560 | 15J 1422 |
| 5V 600 | 15J 1524 |
| 5V 630 | 15J 1600 |
| 5V 670 | 15J 1702 |
| 5V 710 | 15J 1803 |
| 5V 750 | 15J 1905 |
| 5V 800 | 15J 2032 |
| 5V 850 | 15J 2159 |
| 5V 900 | 15J 2286 |
| 5V 950 | 15J 2413 |
| 5V 1000 | 15J 2540 |
| 5V 1060 | 15J 2692 |
| 5V 1120 | 15J 2845 |
| 5V 1180 | 15J 2997 |
| 5V 1250 | 15J 3175 |
| 5V 1320 | 15J 3353 |
| 5V 1400 | 15J 3556 |
| 5V 1500 | 15J 3810 |
| 5V 1600 | 15J 4064 |
| 5V 1700 | 15J 4318 |
| 5V 1800 | 15J 4572 |
| 5V 1900 | 15J 4826 |
| 5V 2000 | 15J 5080 |
| 5V 2120 | 15J 5385 |
| 5V 2240 | 15J 5690 |
| 5V 2360 | 15J 5994 |
| 5V 2500 | 15J 6350 |
| 5V 2650 | 15J 6731 |
| 5V 2800 | 15J 7112 |
| 5V 3000 | 15J 7620 |
| 5V 3150 | 15J 8001 |
| 5V 3350 | 15J 8509 |
| 5V 3550 | 15J 9017 |

Maximum production length: 10 000 mm $L_a$
Non standard lengths from 1800 mm $L_a$
**Minimum order quantity for special lengths:**
6 belts with 5 ribs or
7 belts with 4 ribs or
10 belts with 3 ribs or
15 belts with 2 ribs
or a multiple thereof
Weight: ≈ 0,252 kg/m per rib
**Minimum order quantities for Aramid belts on request.**

### Section 8V/25J

| Designation | Designation (outside length mm) $L_a$ |
|---|---|
| 8V 1000 | 25J 2540 |
| 8V 1060 | 25J 2692 |
| 8V 1120 | 25J 2845 |
| 8V 1180 | 25J 2997 |
| 8V 1250 | 25J 3175 |
| 8V 1320 | 25J 3353 |
| 8V 1400 | 25J 3556 |
| 8V 1500 | 25J 3810 |
| 8V 1600 | 25J 4064 |
| 8V 1700 | 25J 4318 |
| 8V 1800 | 25J 4572 |
| 8V 1900 | 25J 4826 |
| 8V 2000 | 25J 5080 |
| 8V 2120 | 25J 5385 |
| 8V 2240 | 25J 5690 |
| 8V 2360 | 25J 5994 |
| 8V 2500 | 25J 6350 |
| 8V 2650 | 25J 6731 |
| 8V 2800 | 25J 7112 |
| 8V 3000 | 25J 7620 |
| 8V 3150 | 25J 8001 |
| 8V 3350 | 25J 8509 |
| 8V 3550 | 25J 9017 |
| 8V 3750 | 25J 9525 |
| 8V 4000 | 25J 10160 |
| 8V 4250 | 25J 10795 |
| 8V 4500 | 25J 11430 |
| 8V 4750 | 25J 12065 |

Maximum standard length: 15 000 mm $L_a$
Over 15 000 to 18 000 mm on request
Non standard lengths from 2540 mm $L_a$
**Minimum order quantity for all sizes:**
2 belts with 5 ribs or
2 belts with 4 ribs or
3 belts with 3 ribs
or a multiple thereof
Weight: ≈ 0,693 kg/m per rib
**Minimum order quantities for Aramid belts on request.**



Other sizes on request.

# Standard Range

## optibelt *KBX* Kraftbands – Raw Edge, Moulded Cogged – to USA Standard RMA/MPTA

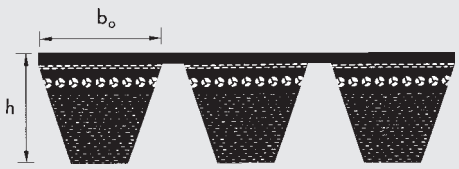


| Section | 3VX/9JX | 5VX/15JX |
|---|---|---|
| $b_o \approx$ (mm) | 9,0 | 15,0 |
| h $\approx$ (mm) | 9,9 | 15,1 |

| Section 3VX/9JX | | Section 5VX/15JX | |
|---|---|---|---|
| Designation | Designation $L_a$ (outside length mm) | Designation | Designation $L_a$ (outside length mm) |
| **3VX 500** | 9JX 1270 | **5VX 500** | 15JX 1270 |
| **3VX 530** | 9JX 1346 | **5VX 530** | 15JX 1346 |
| **3VX 560** | 9JX 1422 | **5VX 560** | 15JX 1422 |
| **3VX 600** | 9JX 1524 | **5VX 600** | 15JX 1524 |
| **3VX 630** | 9JX 1600 | **5VX 630** | 15JX 1600 |
| **3VX 670** | 9JX 1702 | **5VX 670** | 15JX 1702 |
| **3VX 710** | 9JX 1803 | **5VX 710** | 15JX 1803 |
| **3VX 750** | 9JX 1905 | **5VX 750** | 15JX 1905 |
| **3VX 800** | 9JX 2032 | **5VX 800** | 15JX 2032 |
| **3VX 850** | 9JX 2159 | **5VX 850** | 15JX 2159 |
| **3VX 900** | 9JX 2286 | **5VX 900** | 15JX 2286 |
| **3VX 950** | 9JX 2413 | **5VX 950** | 15JX 2413 |
| **3VX 1000** | 9JX 2540 | **5VX 1000** | 15JX 2540 |
| **3VX 1060** | 9JX 2692 | **5VX 1060** | 15JX 2692 |
| **3VX 1120** | 9JX 2845 | **5VX 1120** | 15JX 2845 |
| **3VX 1180** | 9JX 2997 | **5VX 1180** | 15JX 2997 |
| **3VX 1250** | 9JX 3175 | **5VX 1250** | 15JX 3175 |
| **3VX 1320** | 9JX 3353 | **5VX 1320** | 15JX 3353 |
| **3VX 1400** | 9JX 3556 | **5VX 1400** | 15JX 3556 |

**Minimum order quantity on request.**

**Kraftbands with the Sections XPZ, XPA, XPB, AX/HAX and BX/HBX can be supplied on request.**

| | | | |
|---|---|---|---|
| Weight: ≈ 0,117 kg/m per rib | | Weight: ≈ 0,241 kg/m per rib | |

Other sizes on request.

optibelt
Power Transmission

# Standard Range

## optibelt *KB* Kraftbands with Classical V-Belts to DIN / ISO, ASAE

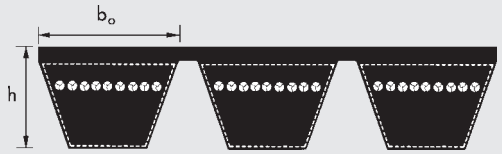


| Section | A / HA | B / HB | C / HC | D / HD |
|---|---|---|---|---|
| $b_o \approx$ (mm) | 13,0 | 17,0 | 22,0 | 32,0 |
| h $\approx$ (mm) | 9,9 | 13,0 | 16,2 | 22,4 |

### Section A / HA

| (Section A) Inside length Belt No. | $L_i$ (mm) | (Section HA) Outside length $L_a$ (mm) |
|---|---|---|
| 47 | 1200 | 1236 |
| 51 | 1300 | 1336 |
| 56 | 1422 | 1458 |
| 57 | 1450 | 1486 |
| 59 | 1500 | 1536 |
| 64 | 1625 | 1661 |
| 67 | 1700 | 1736 |
| 71 | 1800 | 1836 |
| 75 | 1900 | 1936 |
| 79 | 2000 | 2036 |
| 88 | 2240 | 2276 |
| 98 | 2500 | 2536 |
| 100 | 2540 | 2570 |
| 104 | 2650 | 2686 |
| 112 | 2845 | 2881 |
| 120 | 3048 | 3084 |
| 128 | 3250 | 3286 |
| 144 | 3658 | 3694 |
| 158 | 4000 | 4036 |
| 167 | 4250 | 4286 |
| 187 | 4750 | 4786 |

Maximum production length: 8 000 mm
Non standard lengths from 1800 mm
**Minimum order quantity for non listed sizes:**
1200 to 2000 mm
6 belts with 5 ribs or
8 belts with 4 ribs or
10 belts with 3 ribs or
16 belts with 2 ribs
or a multiple thereof
2001 to 8000 mm
6 belts with 5 ribs or
8 belts with 4 ribs or
11 belts with 3 ribs or
16 belts with 2 ribs
or a multiple thereof
Weight: ≈ 0,163 kg / m per rib
**Minimum order quantities for Aramid belts on request.**

### Section B / HB

| (Section B) Inside length Belt No. | $L_i$ (mm) | (Section HB) Outside length $L_a$ (mm) | (Section B) Inside length Belt No. | $L_i$ (mm) | (Section HB) Outside length $L_a$ (mm) |
|---|---|---|---|---|---|
| 47 | 1200 | 1262 | 146 | 3700 | 3762 |
| 51 | 1300 | 1362 | 148 | 3750 | 3812 |
| 55 | 1400 | 1462 | 158 | 4000 | 4062 |
| 59 | 1500 | 1562 | 167 | 4250 | 4312 |
| 61 | 1550 | 1612 | 177 | 4500 | 4562 |
| 63 | 1600 | 1662 | 187 | 4750 | 4812 |
| 64 | 1625 | 1687 | 197 | 5000 | 5062 |
| 67 | 1700 | 1762 | 208 | 5300 | 5362 |
| 71 | 1800 | 1862 | 220 | 5600 | 5662 |
| 73 | 1850 | 1912 | | | |
| 75 | 1900 | 1962 | | | |
| 79 | 2000 | 2062 | | | |
| 83 | 2100 | 2162 | | | |
| 88 | 2240 | 2302 | | | |
| 91 | 2300 | 2362 | | | |
| 94 1/2 | 2400 | 2462 | | | |
| 98 | 2500 | 2562 | | | |
| 102 | 2600 | 2662 | | | |
| 106 | 2700 | 2762 | | | |
| 112 | 2845 | 2907 | | | |
| 118 | 3000 | 3062 | | | |
| 120 | 3048 | 3110 | | | |
| 128 | 3250 | 3312 | | | |
| 132 | 3350 | 3412 | | | |
| 140 | 3550 | 3612 | | | |

Maximum production length: 10000 mm
Non standard lengths from 1800 mm
**Minimum order quantity for non listed sizes:**
5 belts with 5 ribs or
6 belts with 4 ribs or
9 belts with 3 ribs or
13 belts with 2 ribs
or a multiple thereof
Weight: 1≈ 0,266 kg / m per rib
**Minimum order quantities for Aramid belts on request.**

### Section C / HC

| (Section C) Inside length Belt No. | $L_i$ (mm) | (Section HC) Outside length $L_a$ (mm) |
|---|---|---|
| 90 | 2286 | 2361 |
| 98 | 2500 | 2575 |
| 108 | 2750 | 2825 |
| 120 | 3048 | 3123 |
| 128 | 3250 | 3325 |
| 140 | 3550 | 3625 |
| 146 | 3700 | 3775 |
| 151 | 3850 | 3925 |
| 167 | 4250 | 4325 |
| 177 | 4500 | 4575 |
| 187 | 4750 | 4825 |
| 197 | 5000 | 5075 |
| 208 | 5300 | 5375 |
| 220 | 5600 | 5675 |
| 236 | 6000 | 6075 |
| 248 | 6300 | 6375 |

Max. production length: 12 000 mm
Non standard lengths from 2286 mm
**Minimum order quantity for special lengths:**
2286 to 10 000 mm
4 belts with 5 ribs or
5 belts with 4 ribs or
6 belts with 3 ribs or
10 belts with 2 ribs
or a multiple thereof
10 001 to 12 000 mm
3 belts with 5 ribs or
4 belts with 4 ribs or
5 belts with 3 ribs or
8 belts with 2 ribs
or a multiple thereof
Weight: ≈ 0,447 kg / m per rib
**Minimum order quantities for Aramid belts on request.**

### Section D / HD

| (Section D) Inside length Belt No. | $L_i$ (mm) | (Section HD) Outside length $L_a$ (mm) |
|---|---|---|
| 98 | 2500 | 2611 |
| 110 | 2800 | 2911 |
| 120 | 3048 | 3159 |
| 128 | 3250 | 3361 |
| 144 | 3658 | 3769 |
| 158 | 4000 | 4111 |
| 162 | 4115 | 4226 |
| 173 | 4394 | 4505 |
| 180 | 4572 | 4683 |
| 195 | 4953 | 5064 |
| 210 | 5334 | 5445 |
| 225 | 5715 | 5826 |
| 240 | 6096 | 6207 |
| 255 | 6477 | 6588 |
| 270 | 6858 | 6969 |
| 285 | 7239 | 7350 |
| 300 | 7620 | 7731 |
| 315 | 8000 | 8111 |
| 330 | 8382 | 8493 |
| 345 | 8763 | 8874 |
| 360 | 9144 | 9255 |
| 390 | 9906 | 10017 |
| 420 | 10668 | 10779 |
| 450 | 11430 | 11541 |
| 480 | 12200 | 12311 |
| 540 | 13716 | 13827 |
| 600 | 15240 | 15351 |
| 660 | 16764 | 16875 |
| 700 | 17780 | 17891 |

Max. production length: 12 200 mm
Non standard lengths from 2500 mm
**Minimum order quantities for all sizes:**
2 belts with 5 ribs or
2 belts with 4 ribs or
3 belts with 3 ribs or
5 belts with 2 ribs
or a multiple thereof
Weight: ≈ 0,798 kg / m per rib
**Minimum order quantities for Aramid belts on request.**

Other sizes on request.

optibelt
Power Transmission

# Standard Range

## optibelt *RED POWER II* Kraftbands with High Performance Wedge Belts DIN / ISO

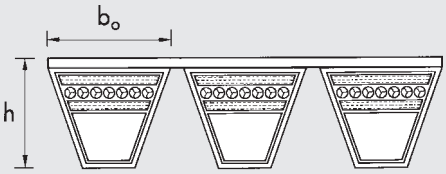


| Section | SPZ | SPA | SPB | SPC |
|---|---|---|---|---|
| $b_o \approx$ (mm) | 9,7 | 12,7 | 16,5 | 22,0 |
| h $\approx$ (mm) | 10,5 | 12,5 | 15,6 | 22,6 |

| Section SPZ | Section SPA | Section SPB | Section SPC |
|---|---|---|---|
| Datum length ISO $L_d$ (mm) | Datum length ISO $L_d$ (mm) | Datum length ISO $L_d$ (mm) | Datum length ISO $L_d$ (mm) |
| 1250 | 1250 | 2000 | 3000 |
| 1400 | 1400 | 2120 | 3150 |
| 1500 | 1500 | 2240 | 3350 |
| 1600 | 1600 | 2360 | 3550 |
| 1700 | 1700 | 2500 | 3750 |
| 1800 | 1800 | 2650 | 4000 |
| 1900 | 1900 | 2800 | 4250 |
| 2000 | 2000 | 3000 | 4500 |
| 2120 | 2120 | 3150 | 4750 |
| 2240 | 2240 | 3350 | 5000 |
| 2360 | 2360 | 3550 | 5300 |
| 2500 | 2500 | 3750 | 5600 |
| 2650 | 2650 | 4000 | 6000 |
| 2800 | 2800 | 4250 | 6300 |
| 3000 | 3000 | 4500 | 6700 |
| 3150 | 3150 | 4750 | 7100 |
| 3350 | 3350 | 5000 | 7500 |
| 3550 | 3550 | 5300 | 8000 |
| | 3750 | 5600 | |
| | 4000 | 6000 | |
| | 4250 | 6300 | |
| | 4500 | 6700 | |
| | | 7100 | |
| | | 7500 | |
| | | 8000 | |
| Maximum production length: 4 500 mm $L_d$<br>Non standard lengths from 1800 mm $L_d$<br>Minimum order quantity<br>for special lengths:<br>8 belts with 5 ribs or<br>10 belts with 4 ribs or<br>14 belts with 3 ribs or<br>21 belts with 2 ribs<br>or a multiple thereof<br>Weight:<br>≈ 0,120 kg/m per rib | Maximum production length: 4 500 mm $L_d$<br>Non standard lengths from 1800 mm $L_d$<br>Minimum order quantity<br>for special lengths:<br>6 belts with 5 ribs or<br>8 belts with 4 ribs or<br>11 belts with 3 ribs or<br>16 belts with 2 ribs<br>or a multiple thereof<br>Weight:<br>≈ 0,166 kg/m per rib | Maximum production length: 8 000 mm $L_d$<br>Non standard lengths from 2000 mm $L_d$<br>Minimum order quantity<br>for special lengths:<br>12 belts with 5 ribs or<br>15 belts with 4 ribs or<br>20 belts with 3 ribs or<br>30 belts with 2 ribs<br>or a multiple thereof<br>Weight:<br>≈ 0,261 kg/m per rib | Maximum production length: 8 000 mm $L_d$<br>Non standard lengths from 3000 mm $L_d$<br>Minimum order quantity<br>for all sizes:<br>8 belts with 5 ribs or<br>11 belts with 4 ribs or<br>14 belts with 3 ribs or<br>22 belts with 2 ribs<br>or a multiple thereof<br>Weight:<br>≈ 0,555 kg/m per rib |

Datum length $L_d$ ≙ pitch length $L_w$ / $L_p$. Other sizes on request.

optibelt
Power Transmission

# Standard Range

## optibelt *RED POWER II* Kraftbands with High Performance Wedge Belts DIN / ISO, RMA / MPTA

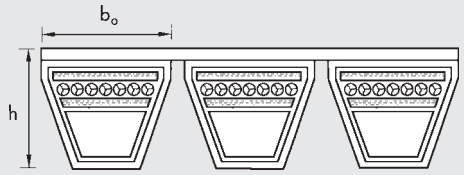


| Section | 3V / 9J | 5V / 15J | 8V / 25J |
|---|---|---|---|
| $b_o \approx$ (mm) | 9,0 | 15,0 | 25,0 |
| h $\approx$ (mm) | 9,9 | 15,1 | 25,5 |

### Section 3V / 9J

| Designation | Designation (outside length mm) $L_a$ |
|---|---|
| **3V 500** | 9J 1270 |
| **3V 530** | 9J 1346 |
| **3V 560** | 9J 1422 |
| **3V 600** | 9J 1524 |
| **3V 630** | 9J 1600 |
| **3V 670** | 9J 1702 |
| **3V 710** | 9J 1803 |
| **3V 750** | 9J 1905 |
| **3V 800** | 9J 2032 |
| **3V 850** | 9J 2159 |
| **3V 900** | 9J 2286 |
| **3V 950** | 9J 2413 |
| **3V 1000** | 9J 2540 |
| **3V 1060** | 9J 2692 |
| **3V 1120** | 9J 2845 |
| **3V 1180** | 9J 2997 |
| **3V 1250** | 9J 3175 |
| **3V 1320** | 9J 3353 |
| **3V 1400** | 9J 3556 |

Maximum production length: 4 000 mm $L_a$
Non standard lengths from 1800 mm $L_a$
Minimum order quantities for special lengths:

| 1270 to 2032 mm $L_a$ | Over 2032 mm $L_a$ |
|---|---|
| 19 belts with 5 ribs or | 23 belts with 5 ribs or |
| 24 belts with 4 ribs or | 29 belts with 4 ribs or |
| 32 belts with 3 ribs or | 38 belts with 3 ribs or |
| 48 belts with 2 ribs | 58 belts with 2 ribs |
| or a multiple thereof | or a multiple thereof |

Weight:
≈ 0,102 kg / m per rib

### Section 5V / 15J

| Designation | Designation (outside length mm) $L_a$ |
|---|---|
| **5V 560** | 15J 1422 |
| **5V 600** | 15J 1524 |
| **5V 630** | 15J 1600 |
| **5V 670** | 15J 1702 |
| **5V 710** | 15J 1803 |
| **5V 750** | 15J 1905 |
| **5V 800** | 15J 2032 |
| **5V 850** | 15J 2159 |
| **5V 900** | 15J 2286 |
| **5V 950** | 15J 2413 |
| **5V 1000** | 15J 2540 |
| **5V 1060** | 15J 2692 |
| **5V 1120** | 15J 2845 |
| **5V 1180** | 15J 2997 |
| **5V 1250** | 15J 3175 |
| **5V 1320** | 15J 3353 |
| **5V 1400** | 15J 3556 |
| **5V 1500** | 15J 3810 |
| **5V 1600** | 15J 4064 |
| **5V 1700** | 15J 4318 |
| **5V 1800** | 15J 4572 |
| **5V 1900** | 15J 4826 |
| **5V 2000** | 15J 5080 |
| **5V 2120** | 15J 5385 |
| **5V 2240** | 15J 5690 |
| **5V 2360** | 15J 5994 |
| **5V 2500** | 15J 6350 |
| **5V 2650** | 15J 6731 |
| **5V 2800** | 15J 7112 |
| **5V 3000** | 15J 7620 |
| **5V 3150** | 15J 8001 |

Maximum production length: 8 000 mm $L_a$
Non standard lengths from 1800 mm $L_a$
Minimum order quantities for special lengths:

| 1270 to 2032 mm $L_a$ | Over 2032 mm $L_a$ |
|---|---|
| 12 belts with 5 ribs or | 13 belts with 5 ribs or |
| 15 belts with 4 ribs or | 16 belts with 4 ribs or |
| 20 belts with 3 ribs or | 22 belts with 3 ribs or |
| 30 belts with 2 ribs | 33 belts with 2 ribs |
| or a multiple thereof | or a multiple thereof |

Weight:
≈ 0,252 kg / m per rib

### Section 8V / 25J

| Designation | Designation (outside length mm) $L_a$ |
|---|---|
| **8V 1000** | 25J 2540 |
| **8V 1060** | 25J 2692 |
| **8V 1120** | 25J 2845 |
| **8V 1180** | 25J 2997 |
| **8V 1250** | 25J 3175 |
| **8V 1320** | 25J 3353 |
| **8V 1400** | 25J 3556 |
| **8V 1500** | 25J 3810 |
| **8V 1600** | 25J 4064 |
| **8V 1700** | 25J 4318 |
| **8V 1800** | 25J 4572 |
| **8V 1900** | 25J 4826 |
| **8V 2000** | 25J 5080 |
| **8V 2120** | 25J 5385 |
| **8V 2240** | 25J 5690 |
| **8V 2360** | 25J 5994 |
| **8V 2500** | 25J 6350 |
| **8V 2650** | 25J 6731 |
| **8V 2800** | 25J 7112 |
| **8V 3000** | 25J 7620 |
| **8V 3150** | 25J 8001 |
| **8V 3350** | 25J 8509 |

Maximum production length: 8 500 mm $L_a$
Non standard lengths from 2540 mm $L_a$
Minimum order quantities for all sizes:
8 belts with 5 ribs or
10 belts with 4 ribs or
13 belts with 3 ribs or
20 belts with 2 ribs
or a multiple thereof

Weight:
≈ 0,693 kg / m per rib



Other sizes on request.

optibelt
Power Transmission

# Standard Range

## optibelt *SUPER VX* Variable Speed Belts – Raw Edge, Moulded Cogged – DIN 7719/ISO 1604

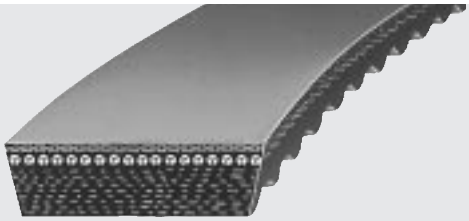

| Section / Inside length $L_i$ (mm) | ISO-Designation (Datum length) $L_d$ |
|---|---|
| **13 x 5** | |
| 468 | |
| 500 | |
| **17 x 5** | |
| 426 | W 16 450 |
| 476 | W 16 500 |
| 536 | W 16 560 |
| 570 | W 16 600 |
| 606 | W 16 630 |
| 776 | W 16 800 |
| **21 x 6** | |
| 530 | W 20 560 |
| 600 | W 20 630 |
| 610 | W 20 640 |
| 675 | W 20 710 |
| 770 | W 20 800 |
| 870 | W 20 900 |
| 970 | W 20 1000 |
| 1220 | W 20 1250 |
| **22 x 8** | |
| 485 | |
| 525 | |
| 565 | |
| 650 | |
| 700 | |
| 750 | |
| 800 | |
| 850 | |
| 900 | |
| 950 | |
| 1000 | |
| 1060 | |
| 1185 | |

| Section / Inside length $L_i$ (mm) | ISO-Designation (Datum length) $L_d$ |
|---|---|
| **26 x 8** | |
| 655 | W 25 690 |
| 672 | W 25 710 |
| 710 | W 25 750 |
| 750 | W 25 790 |
| 762 | W 25 800 |
| 800 | W 25 840 |
| 862 | W 25 900 |
| 962 | W 25 1000 |
| 1082 | W 25 1120 |
| **28 x 8** | |
| 600 | |
| 650 | |
| 700 | |
| 750 | |
| 800 | |
| 850 | |
| 900 | |
| 950 | |
| 1000 | |
| 1060 | |
| 1120 | |
| 1180 | |
| 1250 | |
| 1320 | |
| 1400 | |
| 1450 | |
| 1500 | |
| **30 x 10** | |
| 650 | |
| 665 | |
| 700 | |
| 800 | |
| 850 | |
| 875 | |
| 900 | |
| 950 | |
| 1000 | |
| 1035 | |
| 1050 | |
| 1120 | |
| 1200 | |
| 1320 | |
| 1340 | |
| 1500 | |
| 1600 | |

| Section / Inside length $L_i$ (mm) | ISO-Designation (Datum length) $L_d$ |
|---|---|
| **32 x 10** | |
| 750 | W 31,5 800 |
| 790 | W 31,5 840 |
| 820 | W 31,5 870 |
| 850 | W 31,5 900 |
| 900 | W 31,5 950 |
| 950 | W 31,5 1000 |
| 1000 | W 31,5 1050 |
| 1073 | W 31,5 1120 |
| 1120 | W 31,5 1170 |
| 1180 | W 31,5 1230 |
| 1200 | W 31,5 1250 |
| 1353 | W 31,5 1400 |
| **37 x 10** | |
| 660 | |
| 800 | |
| 850 | |
| 900 | |
| 950 | |
| 1000 | |
| 1020 | |
| 1060 | |
| 1120 | |
| 1180 | |
| 1250 | |
| 1320 | |
| 1400 | |
| 1500 | |
| 1600 | |
| 1700 | |
| 1800 | |
| **41 x 13** | |
| 925 | W 40 990 |
| 1000 | W 40 1060 |
| 1040 | W 40 1100 |
| 1060 | W 40 1120 |
| 1120 | W 40 1180 |
| 1180 | W 40 1240 |
| 1190 | W 40 1250 |
| 1250 | W 40 1310 |
| 1340 | W 40 1400 |
| 1440 | W 40 1500 |
| 1600 | W 40 1660 |
| 1740 | W 40 1800 |
| 1940 | W 40 2000 |

| Section / Inside length $L_i$ (mm) | ISO-Designation (Datum length) $L_d$ |
|---|---|
| **47 x 13** | |
| 1000 | |
| 1060 | |
| 1120 | |
| 1180 | |
| 1250 | |
| 1320 | |
| 1400 | |
| 1500 | |
| 1600 | |
| 1700 | |
| 1800 | |
| **52 x 16** | |
| 1180 | W 50 1250 |
| 1250 | W 50 1320 |
| 1325 | W 50 1400 |
| 1400 | W 50 1480 |
| 1525 | W 50 1600 |
| 1600 | W 50 1680 |
| 1725 | W 50 1800 |
| 1925 | W 50 2000 |
| 2165 | W 50 2240 |
| 2240 | W 50 2320 |
| **55 x 16** | |
| 1400 | |
| 1500 | |
| 1600 | |
| 1700 | |
| 1800 | |
| **65 x 20** | |
| 1706 | W 63 1800 |
| 1906 | W 63 2000 |

| Section / Inside length $L_i$ (mm) | ISO-Designation (Datum length) $L_d$ |
|---|---|
| **70 x 18** | |
| 1600 | |
| 1700 | |
| 1800 | |
| 1900 | |
| 2000 | |
| 2240 | |
| 2500 | |

**Standard production data**
Belt lengths up to 5000 mm
Belt top widths up to 100 mm
Belt thicknesses 5 to 25 mm
24° angle for sections 13 x 5; 17 x 5.
30° angle for sections 52 x 16; 55 x 16; 65 x 20 and 70 x 18.
27° angle for all other sections. Sizes in accordance with USA Standard RMA/MTPA and variable speed belts with angles of 22° to 42° can be supplied on request. Minimum order quantities are necessary.

**Tolerances**

| | | | |
|---|---|---|---|
| Length | ± 1 % of the nominal belt length | | |
| Angle | ± 1.5° of the nominal angle | | |
| Height | ≤ | 8 mm | = ± 0.8 mm |
| | > | 8 to 20 mm | = ± 1.0 mm |
| | > | 20 mm | = ± 1.5 mm |
| Width | ± 0.75 mm | | |

Other sizes and double cogged variable speed belts can be supplied on request.

optibelt
Power Transmission

# Standard Range

## optibelt *SUPER VX* Variable Speed Belts – Raw Edge, Moulded Cogged – According to USA-Standard RMA / MPTA

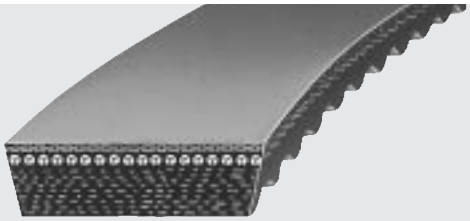

| RMA / MPTA designation | RMA / MPTA designation | RMA / MPTA designation | RMA / MPTA designation |
|---|---|---|---|
| 1422 V 235 | 1922 V 751 | 2530 V 934 | 3230 V 630 |
| 1422 V 240 | 1922 V 756 | 2530 V 990 | 3230 V 670 |
| 1422 V 270 | | | 3230 V 710 |
| 1422 V 290 | 1926 V 250 | 2830 V 337 | 3230 V 723 |
| 1422 V 300 | 1926 V 275 | 2830 V 363 | 3230 V 750 |
| 1422 V 330 | 1926 V 290 | 2830 V 366 | 3230 V 800 |
| 1422 V 340 | 1926 V 407 | 2830 V 367 | 3230 V 850 |
| 1422 V 360 | 1926 V 415 | 2830 V 393 | |
| 1422 V 400 | 1926 V 427 | 2830 V 396 | 3432 V 450 |
| 1422 V 420 | | 2830 V 422 | 3432 V 456 |
| 1422 V 440 | 2230 V 266 | | 3432 V 480 |
| 1422 V 460 | 2230 V 273 | 2926 V 471 | 3432 V 528 |
| 1422 V 470 | 2230 V 275 | 2926 V 486 | 3432 V 534 |
| 1422 V 480 | 2230 V 326 | 2926 V 521 | |
| 1422 V 540 | 2230 V 375 | 2926 V 546 | 4036 V 541 |
| 1422 V 600 | | 2926 V 574 | 4036 V 574 |
| 1422 V 660 | 2322 V 329 | 2926 V 586 | |
| | 2322 V 347 | 2926 V 606 | 4430 V 530 |
| 1430 V 215 | 2322 V 364 | 2926 V 616 | 4430 V 548 |
| | 2322 V 396 | 2926 V 636 | 4430 V 555 |
| 1922 V 277 | 2322 V 421 | 2926 V 646 | 4430 V 560 |
| 1922 V 282 | 2322 V 434 | 2926 V 666 | 4430 V 570 |
| 1922 V 298 | 2322 V 441 | 2926 V 686 | 4430 V 578 |
| 1922 V 321 | 2322 V 461 | 2926 V 726 | 4430 V 600 |
| 1922 V 332 | 2322 V 481 | 2926 V 750 | 4430 V 610 |
| 1922 V 338 | 2322 V 486 | 2926 V 776 | 4430 V 630 |
| 1922 V 363 | 2322 V 521 | 2926 V 786 | 4430 V 652 |
| 1922 V 381 | 2322 V 541 | | 4430 V 660 |
| 1922 V 386 | 2322 V 601 | 3226 V 392 | 4430 V 670 |
| 1922 V 403 | 2322 V 661 | 3226 V 400 | 4430 V 690 |
| 1922 V 426 | 2322 V 681 | 3226 V 433 | 4430 V 700 |
| 1922 V 443 | 2322 V 701 | 3226 V 450 | 4430 V 710 |
| 1922 V 454 | 2322 V 801 | 3226 V 505 | 4430 V 730 |
| 1922 V 460 | | 3226 V 545 | 4430 V 750 |
| 1922 V 484 | 2426 V 353 | 3226 V 585 | 4430 V 790 |
| 1922 V 526 | 2426 V 363 | 3226 V 603 | 4430 V 800 |
| 1922 V 544 | | 3226 V 650 | 4430 V 850 |
| 1922 V 604 | 2530 V 500 | 3226 V 663 | |
| 1922 V 630 | 2530 V 530 | 3226 V 723 | 4436 V 525 |
| 1922 V 646 | 2530 V 560 | 3226 V 783 | 4436 V 551 |
| 1922 V 666 | 2530 V 600 | 3226 V 843 | 4436 V 561 |
| 1922 V 686 | 2530 V 630 | | 4436 V 576 |
| 1922 V 706 | 2530 V 670 | 3230 V 419 | 4436 V 646 |
| 1922 V 721 | 2530 V 710 | 3230 V 528 | 4436 V 750 |
| 1922 V 726 | 2530 V 750 | 3230 V 560 | |
| | 2530 V 790 | 3230 V 585 | |
| | 2530 V 800 | 3230 V 600 | |



Standard products – minimum order quantity on request. Other sizes and double cogged variable speed belts on request.

optibelt
Power Transmission

# Standard Range

## optibelt *DK* Double Section V-Belts to DIN / ISO, ASAE

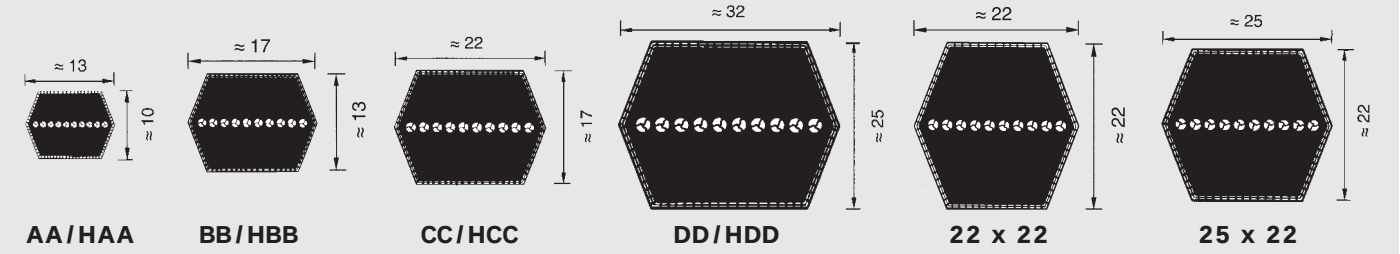


| Section AA / HAA | | Section BB / HBB | | | | Section CC / HCC | | Section DD / HDD | |
|---|---|---|---|---|---|---|---|---|---|
| Reference length (mm) | Belt No. | Reference length (mm) | Belt No. | Reference length (mm) | Belt No. | Reference length (mm) | Belt No. | Reference length (mm) | Belt No. |
| 2000 | 77 | 1980 | 75 | 3750 | 145 | 2280 | 86 | upon request | |
| 2032 | 78 | 2180 | 83 | 4010 | 155 | 2500 | 94 | | |
| 2370 | 91 | 2300 | 88 | 4040 | 156 | 2800 | 106 | | |
| 2500 | 96 | 2370 | 90 | 4200 | 162 | 3200 | 122 | | |
| 2650 | 102 | 2500 | 95 | 4470 | 173 | 3310 | 126 | | |
| 2667 | 103 | 2540 | 97 | 4500 | 174 | 3765 | 144 | | |
| 2800 | 108 | 2600 | 99 | 4750 | 184 | 4000 | 153 | | |
| 3300 | 128 | 2650 | 101 | 5000 | 194 | 4216 | 162 | Weight: ≈ 0,935 kg / m | |
| 3920 | 152 | 2740 | 105 | 5639 | 221 | 4300 | 165 | | |
| | | 2800 | 107 | 6900 | 270 | 4500 | 173 | **Section 22 x 22** | |
| | | 2850 | 109 | | | 5000 | 193 | | |
| | | 2900 | 111 | | | 5300 | 204 | 5180 | |
| | | 2920 | 112 | | | 5340 | 206 | 5220 | |
| | | 3000 | 115 | | | 5750 | 224 | 5850 | |
| | | 3030 | 116 | | | | | 6270 | |
| | | 3150 | 121 | | | | | | |
| | | 3250 | 125 | | | | | Weight: ≈ 0,511 kg / m | |
| | | 3280 | 126 | | | | | | |
| | | 3325 | 128 | | | | | | |
| | | 3390 | 131 | | | | | **Section 25 x 22** | |
| | | 3450 | 133 | | | | | | |
| | | 3500 | 135 | | | | | upon request | |
| | | 3550 | 137 | | | | | | |
| | | 3658 | 141 | | | | | | |
| | | 3730 | 144 | | | | | | |
| Weight: ≈ 0,150 kg / m | | Weight: ≈ 0,250 kg / m | | | | Weight: ≈ 0,440 kg / m | | Weight: ≈ 0,625 kg / m | |

Non standard lengths and special constructions from:

Section AA / HAA 1350 to 28 000 mm
Section BB / HBB 1350 to 28 000 mm
Section CC / HCC 1600 to 28 000 mm
Section DD / HDD 3000 to 10 000 mm
Section 22 x 22 3000 to 10 000 mm
Section 25 x 22 1600 to 28 000 mm

**Minimum order quantity for special lengths on request.**

Conversion factors from the belt number to the reference length:

**Section AA / HAA –** Belt No. x 25,4 = mm + 53 mm

**Section BB / HBB –** (up to Belt No. 210)
Belt No. x 25,4 = mm + 74 mm
(over Belt No. 210)
Belt No. x 25,4 = mm + 36 mm

**Section CC / HCC –** (up to Belt No. 210)
Belt No. x 25,4 = mm + 107 mm
(over Belt No. 210)
Belt No. x 25,4 = mm + 56 mm

**Section DD / HDD –** (up to Belt No. 210)
Belt No. x 25,4 = mm + 132 mm
(over Belt No. 210)
Belt No. x 25,4 = mm + 69 mm

# Standard Range

## optibelt *KS* V-Grooved Pulleys – optibelt *TB* Taper Bushes
## optibelt *RE* Variable Speed Pulleys

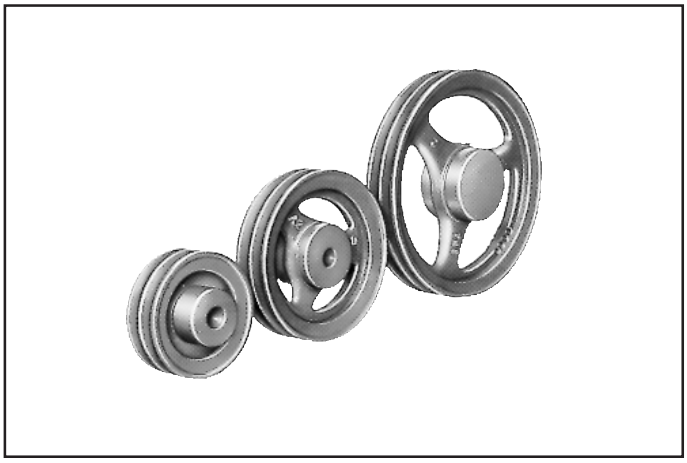

### Optibelt KS V-Grooved Pulleys

Optibelt-KS V-Grooved Pulleys are available in pilot bored and for taper bush versions for all common belt sections.

### Optibelt RE Variable Speed Pulleys

Optibelt-RE Variable Speed Pulleys allow for a multi-stage speed change between driving and driven pulley. They can be used with classical as well as variable speed belts.

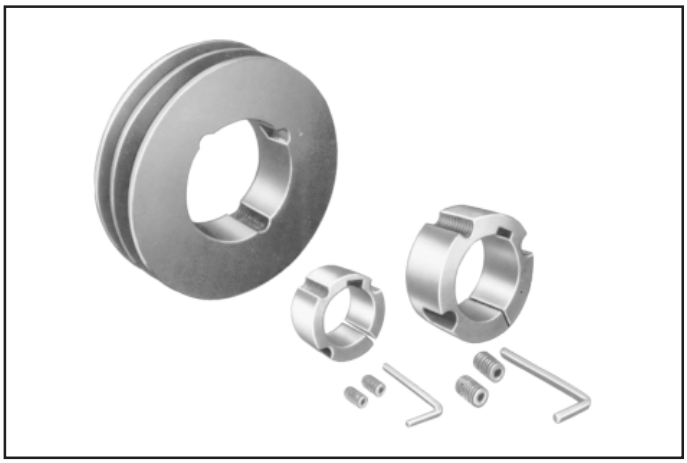

### Optibelt TB Taper Bushes

Optibelt TB Taper Bushes are used for simple installations of pulleys on shafts with or without keyway.

# Standard Range

## optibelt KS V-Grooved Pulleys, Types

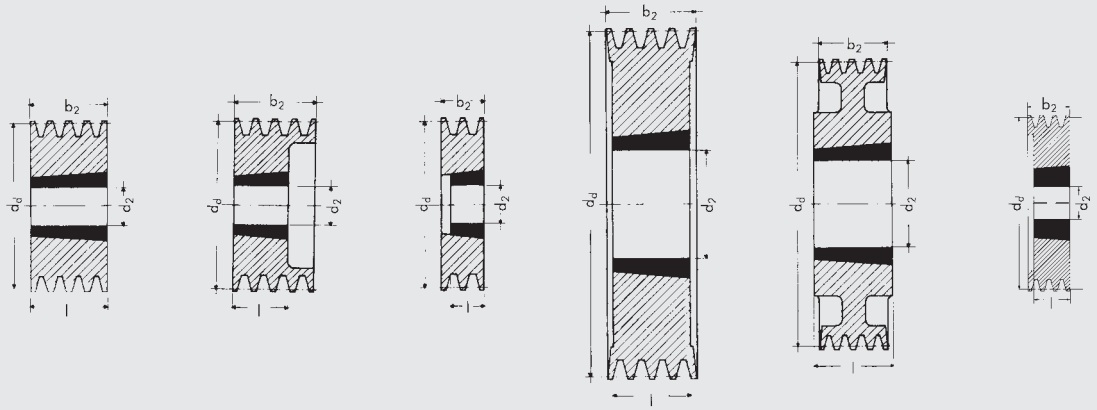


Type 1 Type 2 Type 3 Type 4 Type 5 Type 6

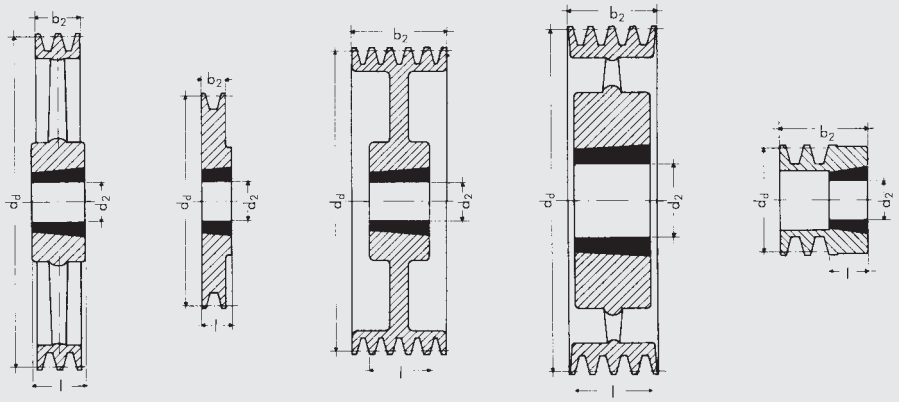


Type 7 Type 8 Type 9 Type 10 Type 11

Rights to technical modifications reserved

### Balancing

V-grooved pulleys are statically balanced in accordance with the guidelines in VDI 2060, as standard:

Quality level Q 16; for dia. $d_d \geq 400$ mm at n = 1500 r.p.m.; for dia. $d_d > 400$ mm at v = 30 m/s.

The pulleys are balanced without keys on smooth balancing spindles. Machines whose runners are balanced with a keyway entered in the end of the shaft have to be ordered with the following remark: “Balanced with pilot bore and empty key on smooth balancing spindles without fitted keyway.”

Balancing in one plane to quality level Q 6.3 on request.

We recommend balancing in two planes to quality level Q 6.3, or finer, when v ≥ > 30 m/s or the ratio or datum diameter to face width $d_d$: $b_2$ is < 4 at v > 20 m/s.

In such cases, the pulley operational speed must be stated.

Special pulleys and custom designed pulleys on request

# Standard Range

## Pulleys – Standards – Design Criteria – Types

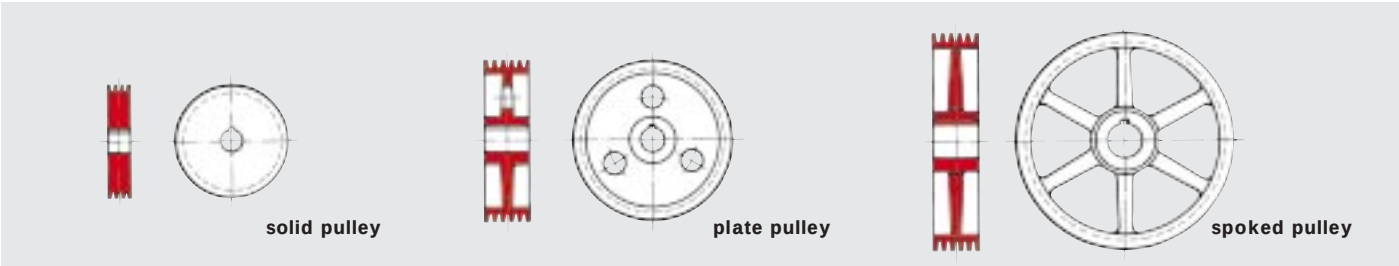


An essential component in V-belt drive systems is the V-belt pulley, or V- pulley as it is usually termed. These pulleys are predominantly made from GG 20 cast iron and are available pilot bored, finished bored or with a taper bush.

The British and DIN Standards are based on the ISO Standard as are the standards of all industrialised countries.

ISO 4183 Grooved Pulleys for Classical V-Belts and Wedge Belts.

V-belt pulleys with grooves for wedge belts to BS 3790:1981 and DIN 7753 Part 1 are also suitable for classical V-belts with the same datum width $b_d$ to BS 3790:1981 and DIN 2215. These are known as dual duty pulleys.

### Example

| | Belt | | Groove |
|---|---|---|---|
| Section | SPZ | Z/10 | SPZ – Z/10 |
| Top width | $b_o \approx 9{,}7$ | $b_o \approx 10$ | $b_1 \approx 9{,}7$ |
| Datum width | $b_d = 8{,}5$ | | $b_d = 8{,}5$ |
| Belt height/ groove depth | $h \approx 8$ | $h \approx 6$ | $t_{min} = 11$ |

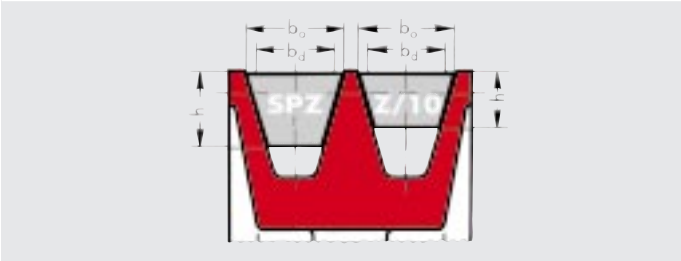


The following should be observed in the selection of pulleys:

- Use standard pulley diameters.
  If design considerations make this impossible, a standard diameter should, as a minimum requirement, be chosen for the largest pulley in the drive.
- Do not select a pulley smaller than the minimum recommended size in the interest of belt service life and overall drive efficiency.
- If manufacturing your own pulleys, the overall shape and machining must conform to the relevant Standards.
- Groove pulleys are generally balanced in one plane (statically), to quality level Q 16 as in VDI 2060.
- Balancing in two planes (dynamically), quality level Q 6.3, becomes necessary if:
  $v > 30$ m/s or
  the ratio of datum diameter to pulley face width $d_d$:$b_2$ is < 4 at $v > 20$ m/s.

**Note:** The timely replacement of pulleys damaged by corrosion or erosion prevents premature failure of the belts.

Furthermore, it is essential that the belts should never run with their inside circumference in contact with the bottom of the groove as this can quickly lead to damage and premature failure (Exception: special drives such as V-flat drives).

### Deep Grooved Pulleys

Deep grooved pulleys are employed for special drive situations such as,

- the use of guide idlers
- twist drives or
- drives subject to severe vibration.

The increased groove top width "$b_1$" and depth "t" of deep grooved pulleys improves the running characteristics of the belt, particularly as it enters the groove. Belt turnover and run out are prevented.

### Deep Grooved Pulleys are not suitable for use with Kraftbands

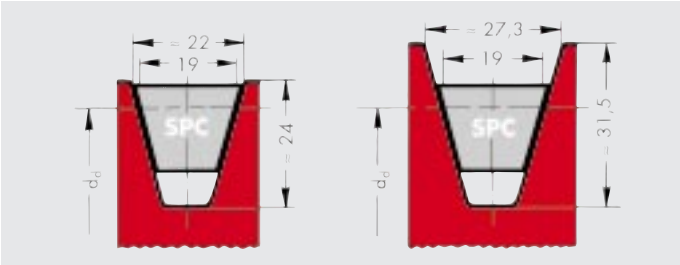

# Standard Range

## V-Grooved Pulleys DIN 2211 Page 1 for Wedge Belts and DIN 2217 Page 1 for Classical V-Belts

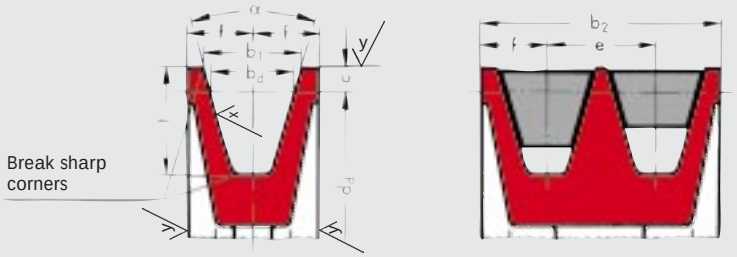


$\sqrt{x} = \sqrt{R_z\ 25}$

$\sqrt{y} = \sqrt{R_z\ 100}$

*Table 8*

| | | | | | | | | | | | | |
|---|---|---|---|---|---|---|---|---|---|---|---|---|
| **V-belt Section** | ISO designation | – | Y* | – | Z* | A* | B* | – | C* | – | D | E |
| | DIN 2215 designation | **5** | **6** | **8** | **10** | **13** | **17** | **20** | **22** | **25** | **32** | **40** |
| **Wedge belt Section** | DIN 7753 Part 1 and ISO designation | – | – | – | SPZ* | SPA* | SPB* | – | SPC* | – | – | – |
| $b_d$ | | 4.2 | 5.3 | 6.7 | 8.5 | 11.0 | 14.0 | 17.0 | 19.0 | 21.0 | 27.0 | 32.0 |
| $b_1 \approx$ | | 5.0 | 6.3 | 8.0 | 9.7 | 12.7 | 16.3 | 20.0 | 22.0 | 25.0 | 32.0 | 40.0 |
| c | | 1.3 | 1.6 | 2.0 | 2.0 | 2.8 | 3.5 | 5.1 | 4.8 | 6.3 | 8.1 | 12.0 |
| e | | 6 ± 0.3 | 8 ± 0.3 | 10 ± 0.3 | 12 ± 0.3 | 15 ± 0.3 | 19 ± 0.4 | 23 ± 0.4 | 25.5 ± 0.5 | 29 ± 0.5 | 37 ± 0.6 | 44.5 ± 0.7 |
| f | | 5 ± 0.5 | 6 ± 0.5 | 7 ± 0.6 | 8 ± 0.6 | 10 ± 0.6 | 12.5 ± 0.8 | 15 ± 0.8 | 17 ± 1.0 | 19 ± 1.0 | 24 ± 2.0 | 29 ± 2.0 |
| t | Endless belts | $6 +^{0.6}_{0}$ | $7 +^{0.6}_{0}$ | $9 +^{0.6}_{0}$ | $11 +^{0.6}_{0}$ | $14 +^{0.6}_{0}$ | $18 +^{0,6}_{0}$ | $18 +^{0.6}_{0}$ | $24 +^{0.6}_{0}$ | $22 +^{0.6}_{0}$ | $28 +^{0.6}_{0}$ | $33 +^{0.6}_{0}$ |
| | Open ended V-belting DIN 2216 | | | | | | | $21 +^{0.6}_{0}$ | | $26 +^{0.6}_{0}$ | $33 +^{0.6}_{0}$ | $38 +^{0.6}_{0}$ |
| $d_{d\ min}$ | V-Belts | 20 | 28 | 40 | 50 | 71 | 112 | 160 | 180 | 250 | 355 | 500 |
| | Wedge belts | – | – | – | 63 | 90 | 140 | – | 224 | – | – | – |
| α | | 32° ± 1° $d_d \leq 50$ | 32° ± 1° $d_d \leq 63$ | 32° ± 1° $d_d \leq 75$ | – | – | – | – | – | – | – | – |
| | | – | – | – | 34° ± 1° $d_d \leq 80$ | 34° ± 1° $d_d \leq 118$ | 34° ± 1° $d_d \leq 190$ | 34° ± 1° $d_d \leq 250$ | 34° ± 1° $d_d \leq 315$ | 34° ± 1° $d_d \leq 355$ | – | – |
| | | 36° ± 1° $d_d > 50$ | 36° ± 1° $d_d > 63$ | 36° ± 1° $d_d > 75$ | – | – | – | – | – | – | 36° ± 30' $d_d \leq 500$ | 36° ± 30' $d_d \leq 630$ |
| | | – | – | – | 38° ± 1° $d_d > 80$ | 38° ± 1° $d_d > 118$ | 38° ± 1° $d_d > 190$ | 38° ± 1° $d_d > 250$ | 38° ± 30' $d_d > 315$ | 38° ± 30' $d_d > 355$ | 38° ± 30' $d_d > 500$ | 38° ± 30' $d_d > 630$ |
| Face width for z number of grooves $b_2 = (z - 1)\ e + 2\ f$ | **1** | 10.0 | 12.0 | 14.0 | 16.0 | 20.0 | 25.0 | 30.0 | 34.0 | 38.0 | 48.0 | 58.0 |
| | **2** | 16.0 | 20.0 | 24.0 | 28.0 | 35.0 | 44.0 | 53.0 | 59.5 | 67.0 | 85.0 | 102.5 |
| | **3** | 22.0 | 28.0 | 34.0 | 40.0 | 50.0 | 63.0 | 76.0 | 85.0 | 96.0 | 122.0 | 147.0 |
| | **4** | 28.0 | 36.0 | 44.0 | 52.0 | 65.0 | 82.0 | 99.0 | 110.5 | 125.0 | 159.0 | 191.5 |
| | **5** | 34.0 | 44.0 | 54.0 | 64.0 | 80.0 | 101.0 | 122.0 | 136.0 | 154.0 | 196.0 | 236.0 |
| | **6** | 40.0 | 52.0 | 64.0 | 76.0 | 95.0 | 120.0 | 145.0 | 161.5 | 183.0 | 233.0 | 280.5 |
| | **7** | | 60.0 | 74.0 | 88.0 | 110.0 | 139.0 | 168.0 | 187.0 | 212.0 | 270.0 | 325.0 |
| | **8** | | | 84.0 | 100.0 | 125.0 | 158.0 | 191.0 | 212.5 | 241.0 | 307.0 | 369.5 |
| | **9** | | | | 112.0 | 140.0 | 177.0 | 214.0 | 238.0 | 270.0 | 344.0 | 414.0 |
| | **10** | | | | | 155.0 | 196.0 | 237.0 | 263.5 | 299.0 | 381.0 | 458.5 |
| | **11** | | | | | | 215.0 | 260.0 | 289.0 | 328.0 | 418.0 | 503.0 |
| | **12** | | | | | | | 283.0 | 314.5 | 357.0 | 455.0 | 547.5 |

(Figures in mm)

* These V-pulleys also accept Optibelt Super TX M=S V-belts.

# Standard Range

## V-Grooved Pulleys DIN 2211 Page 1 for Wedge Belts and DIN 2217 Page 1 for Classical V-Belts

*Table 9*

| **V-belt section** | ISO designation | – | Y | – | Z | A | B | – | C | – | D | E | Datum diameter $d_d$ | | Run out and side wobble tolerance |
|---|---|---|---|---|---|---|---|---|---|---|---|---|---|---|---|
| | DIN 2215 designation | **5** | **6** | **8** | **10** | **13** | **17** | **20** | **22** | **25** | **32** | **40** | | | |
| **Wedge belt section** | DIN 7753 Part 1 and ISO 4184 designation | – | – | – | SPZ | SPA | SPB | – | SPC | – | – | – | min | max | |
| **Datum diameter $d_d$** | | 20.0<br>22.0<br>25.0<br>28.0<br>31.5<br>35.5<br>40.0 | 28.0<br>31.5<br>35.5<br>40.0 | 40 | 40▪ | | | | | | | | 20.0<br>22.0<br>25.0<br>28.0<br>31.5<br>35.5<br>40.0 | 20.4<br>22.4<br>25.4<br>28.4<br>32.0<br>36.1<br>40.6 | |
| | | 45.0<br>50.0<br>56.0<br>63.0 | 45.0<br>50.0<br>56.0<br>63.0 | 45<br>50<br>56<br>63 | **45▪**<br>**50▪**<br>**56▪**<br>**63**<br>**67** | **63▪**<br>**67▪** | | | | | | | 45.0<br>50.0<br>56.0<br>63.0<br>67.0 | 45.7<br>50.8<br>56.9<br>64.0<br>68.0 | 0.2 |
| | | 71.0<br><br>80.0 | 71.0<br><br>80.0<br><br>90.0<br><br>100.0 | 71<br><br>80<br><br>90<br><br>100 | **71**<br>**75**<br>**80**<br>**85**<br>**90**<br>**95**<br>**100**<br>**106** | **71▪**<br>**75▪**<br>**80▪**<br>**85▪**<br>**90**<br>**95**<br>**100**<br>**106** | **90▪**<br>**95▪**<br>**100▪**<br>**106▪** | | | | | | 71.0<br>75.0<br>80.0<br>85.0<br>90.0<br>95.0<br>100.0<br>106.0 | 72.1<br>76.1<br>81.3<br>86.3<br>91.4<br>96.4<br>101.6<br>107.6 | |
| | | | 112.0<br><br>125.0 | 112<br><br>125<br><br>140<br><br>160 | **112**<br>**118**<br>**125**<br>**132**<br>**140**<br>**150**<br>**160** | **112**<br>**118**<br>**125**<br>**132**<br>**140**<br>**150**<br>**160** | **112▪**<br>**118▪**<br>**125▪**<br>**132▪**<br>**140**<br>**150**<br>**160** | <br><br><br><br><br><br>160 | <br><br><br><br>140•<br>150•<br>160• | | | | 112.0<br>118.0<br>125.0<br>132.0<br>140.0<br>150.0<br>160.0 | 113.8<br>119.9<br>127.0<br>134.1<br>142.2<br>152.4<br>162.6 | 0.3 |
| | | | | <br><br>180<br><br>200 | **170**<br>**180**<br>**190**<br>**200**<br>**212**<br>**224**<br><br><br>**250** | **170**<br>**180**<br>**190**<br>**200**<br>**212**<br>**224**<br>**225**<br>**236**<br>**250** | **170**<br>**180**<br>**190**<br>**200**<br>**212**<br>**224**<br>**225**<br>**236**<br>**250**<br>**265** | <br>180<br><br>200<br><br>224<br><br><br>250 | <br>**180▪**<br>190▪<br>**200▪**<br>**212▪**<br>**224**<br>**225**<br>**236**<br>**250**<br>**265** | <br><br><br><br><br><br><br><br>250 | | | 170.0<br>180.0<br>190.0<br>200.0<br>212.0<br>224.0<br>225.0<br>236.0<br>250.0<br>265.0 | 172.7<br>182.9<br>193.0<br>203.2<br>215.4<br>227.6<br>228.6<br>239.8<br>254.0<br>269.0 | 0.4 |
| | | | | | **280**<br>**300**<br>**315**<br><br>**355**<br><br>**400** | **280**<br>**300**<br>**315**<br><br>**355**<br><br>**400** | **280**<br>**300**<br>**315**<br>**335**<br>**355**<br>**375**<br>**400**<br>**425** | 280<br><br>315<br><br>355<br><br>400 | **280**<br>**300**<br>**315**<br>**335**<br>**355**<br>**375**<br>**400**<br>**425** | 280<br><br>315<br><br>355<br><br>400 | <br><br><br><br>355<br><br>400 | | 280.0<br>300.0<br>315.0<br>335.0<br>355.0<br>375.0<br>400.0<br>425.0 | 284.5<br>304.8<br>320.0<br>340.0<br>360.7<br>380.7<br>406.4<br>431.4 | 0.5 |
| | | | | | **450**<br><br>**500**<br>**560**<br>**630** | **450**<br><br>**500**<br>**560**<br>**630** | **450**<br><br>**500**<br>**560**<br>**630** | 450<br><br>500<br>560<br>630 | **450**<br>**475**<br>**500**<br>**560**<br>**630** | 450<br><br>500<br>560<br>630 | 450<br><br>500<br>560<br>630 | <br><br>500<br>560<br>630 | 450.0<br>475.0<br>500.0<br>560.0<br>630.0 | 457.2<br>482.2<br>508.0<br>569.0<br>640.1 | 0.6 |
| | | | | | **710** | 710<br>800<br>900<br>1000 | **710**<br>**800**<br>**900**<br>**1000** | 710<br>800<br>900<br>1000 | **710**<br>**800**<br>900<br>**1000** | 710<br>800<br>900<br>1000 | 710<br>800<br>900<br>1000 | 710<br>800<br>900<br>1000 | 710.0<br>800.0<br>900.0<br>1000.0 | 721.4<br>812.8<br>914.4<br>1016.0 | 0.8 |
| | | | | | | | | 1120<br>1250<br>1400<br>1600 | 1120<br>**1250**<br>1400<br>1600 | 1120<br>1250<br>1400<br>1600 | 1120<br>1250<br>1400<br>1600 | 1120<br>1250<br>1400<br>1600 | 1120.0<br>1250.0<br>1400.0<br>1600.0 | 1137.9<br>1270.0<br>1422.4<br>1625.6 | 1.0 |
| | | | | | | | | 1800<br>2000 | 1800<br>2000 | 1800<br>2000 | 1800<br>2000 | 1800<br>2000 | 1800.0<br>2000.0 | 1828.8<br>2032.0 | 1.2 |
| Admissible datum diameter variations relative to one another (mm) | | 0.3 | | | 0.4 | | | 0.6 | | | | | — | | |

For further details see standard DIN 2211 Page 1 and DIN 2217 Page 1. These V-grooved pulleys also accept Optibelt Super TX M=S V-belts.
**Figures in bold type** are the preferred datum diameters. For classical V-belts only. For Optibelt Super TX M=S wedge belts.

# Standard Range

## V-Grooved Pulleys USA Standard RMA / MPTA for Wedge Belts

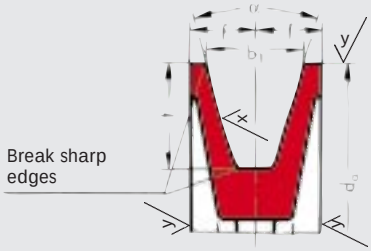


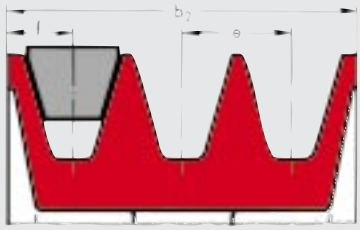

$\sqrt{x} = \sqrt{R_z\ 25}$

$\sqrt{y} = \sqrt{R_z\ 100}$

*Table 10*

| **Belt section** USA Standard RMA / MPTA | | **3V / 9N** | **5V / 15N** | **8V / 25N** |
|---|---|---|---|---|
| $b_1$ | | 8.89 ± 0.13 | 15.24 ± 0.13 | 25.4 ± 0.13 |
| e | | 10.30 ± 0.40 | 17.50 ± 0.40 | 28.6 ± 0.40 |
| f | | $9.00^{+2.00}_{-1.00}$ | $13.00^{+3.00}_{-1.00}$ | $19.0^{+6.00}_{-2.00}$ |
| $t_{min}$ | | 8.6 | 15.0 | 25.1 |
| $d_{a\ min}$ | | 63 | 140 | 315 |
| α | | 36° ± 25‘<br>$d_a$ 63 to 90 | —<br>— | — —<br>— |
| | | 38° ± 25’<br>$d_a$ > 90 to 150 | 38° ± 25’<br>$d_a$ 140 to 255 | 38° ± 25’<br>315 to 40 |
| | | 40° ± 25’<br>$d_a$ > 150 to 305 | 40° ± 25’<br>$d_a$ > 255 to 405 | 40° ± 25’<br>$d_a$ >405 to 570 |
| | | 42° ± 25’<br>$d_a$ > 305 | 42° ± 25’<br>$d_a$ > 405 | 42° ± 25’<br>$d_a$ > 570 |
| Face width $b_2$ for number of grooves z<br>$b_2 = (z - 1)\ e + 2\ f$ | **1** | 18.0 | 26.0 | 38.0 |
| | **2** | 28.3 | 43.5 | 66.6 |
| | **3** | 38.6 | 61.0 | 95.2 |
| | **4** | 48.9 | 78.5 | 123.8 |
| | **5** | 59.2 | 96.0 | 152.4 |
| | **6** | 69.5 | 113.5 | 181.0 |
| | **7** | 79.8 | 131.0 | 209.6 |
| | **8** | 90.1 | 148.5 | 238.2 |
| | **9** | 100.4 | 166.0 | 266.8 |
| | **10** | 110.7 | 183.5 | 295.4 |
| | **11** | 121.0 | 201.0 | 324.0 |
| | **12** | 131.3 | 218.5 | 352.6 |
| | | | (Values in mm) | |

For drives with several grooves the total of all deviations from the nominal value e for all groove distances of a pulley + / - 0.8 mm must not be exceeded. For further details see US-Standard RMA / MPTA.

**Note:**

The permissible variations of the V-grooved pulley according to US-Standard RMA / MPTA deviate only slightly from the values contained in ISO 5290 “Grooved pulleys for joined narrow belts” (Kraftbands). Therefore Optibelt KB Krafbands can be used for V-grooved pulleys manufactured according to both standards.
These V-grooved pulleys are also used for Optibelt Super TX M=S V-belts.

# Standard Range
## V-Pulleys for Kraftbands

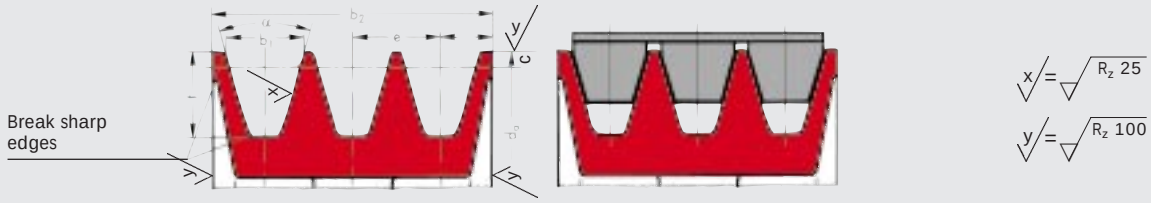


*Table 11: V-pulleys for Kraftbands with wedge belts according to ISO 5290*

| Section | $d_a$ | $\alpha°$ ± 30 | $b_1$ ≈' | $\delta h_{1max}$ | $\delta h_{2max}$ | $t_{min}$ | e | Tol e[1)] | Σ Tol e[2)] | $f_{min}$ | $d_{a\ min}$ |
|---|---|---|---|---|---|---|---|---|---|---|---|
| **3V/9J** | 67 to 90<br>> 90 to 150<br>> 150 to 300<br>> 300 | 36<br>38<br>40<br>42 | 8.9 | 0.20 | 0.30 | 8.9 | 10.3 | ± 0.25 | ± 0.5 | 9 | 67 |
| **5V/15J** | 180 to 250<br>> 250 to 400<br>> 400 | 38<br>40<br>42 | 15.2 | 0.25 | 0.40 | 15.2 | 17.5 | ± 0.25 | ± 0.5 | 13 | 180 |
| **8V/25J** | 315 to 400<br>> 400 to 560<br>> 560 | 38<br>40<br>42 | 25.4 | 0.30 | 0.50 | 25.4 | 28.6 | ± 0.40 | ± 0.8 | 19 | 315 |

For further details please see Standard ISO 5290.
1) Tolerance for the dimension 'e' between two adjacent grooves.
2) The sum of all deviations from the nominal dimension 'e' for all the groove spacings of a pulley must not exceed the tolerance shown.

The International Standard ISO 5290 specifies pulley groove dimensions for belt sections 3V/9J, 5V/15J, 8V/25J. The groove top width '$b_1$' is used as the basic reference dimension for standardisation of the grooves and the joined V-belts. The pulley groove and the joined V-belts are considered in the Standard ISO 5290 as a single unit.

The values of $\delta h_1$ and $\delta h_2$ were chosen to ensure that

1. the belt joining band does not come into contact with the outside diameter of the pulley in order to avoid the belts separating from the joining band,
2. the belts are still seated deep enough in the pulley grooves to ensure full transmission of power.

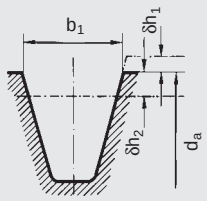


$b_1$ = effective width
$d_a$ = effective outside diameter

The groove faces must be straight at least to the level of $d_a - 2\ \delta h_2$.

*Table 12: V-pulleys for Kraftbands with section SPZ, SPA, SPB and SPC according to DIN 2211/ISO 4183*

| Section | $d_d$ | $\alpha°$ ± 30' | $b_1$ ≈ | c | $t_{min}$ | e | Tol e[1)] | Σ Tol e[2)] | $f_{min}$ | $d_{d\ min}$ |
|---|---|---|---|---|---|---|---|---|---|---|
| **SPZ** | 71 to 80<br>> 190 | 34<br>38 | 9.7 | 2.0 | 11 | 12.0 | ± 0.3 | ± 0.6 | 8.0 | 71 |
| **SPA** | 100 to 118<br>> 80 | 34<br>38 | 12.7 | 2.8 | 14 | 15.0 | ± 0.3 | ± 0.6 | 10.0 | 100 |
| **SPB** | 160 to 190<br>> 190 | 34<br>38 | 16.3 | 3.5 | 18 | 19.0 | ± 0.4 | ± 0.8 | 12.5 | 160 |
| **SPC** | 250 to 315<br>> 315 | 34<br>38 | 22.0 | 4.8 | 24 | 25.5 | ± 0.40 | ± 0.8 | 17.0 | 250 |

# Standard Range
## V-Pulleys for Kraftbands

*Table 13: V-pulleys for Kraftbands with classical V-belts ISO 5291*

| Section | $d_a$ | α° ± 30' | $b_1$ ≈ | $\delta h_{1max}$ | $\delta h_{2max}$ | c | $t_{min}$ | e | Tol e[1)] | Σ Tol e[2)] | $f_{min}$ | $d_{a\ min}$ |
|---|---|---|---|---|---|---|---|---|---|---|---|---|
| **AJ/HA** | 80 to 125<br>> 125 | 34<br>38 | 13.0 | 0.20 | 0.35 | 1.5 | 12.0 | 15.88 | ± 0.3 | ± 0.6 | 9.0 | 80 |
| **BJ/HB** | 130 to 195<br>> 195 | 34<br>38 | 16.5 | 0.25 | 0.40 | 2.0 | 14.0 | 19.05 | ± 0.4 | ± 0.8 | 11.5 | 130 |
| **CJ/HC** | 210 to 325<br>> 325 | 34<br>38 | 22.4 | 0.30 | 0.45 | 3.0 | 19.0 | 25.40 | ± 0.5 | ± 1.0 | 16.0 | 210 |
| **DJ/HD** | 370 to 490<br>> 490 | 36<br>38 | 32.8 | 0.30 | 0.55 | 4.5 | 26.0 | 36.53 | ± 0.6 | ± 1.2 | 23.0 | 370 |

1) Tolerance for the dimension 'e' between two adjacent grooves.
2) The sum of all deviations from the nominal dimension 'e' for all the groove spacings of a pulley must not exceed the tolerance shown.

*Table 14: Pulley width for Kraftbands*

| Section | 3V/9J | 5V/15J | 8V/25J | SPZ | SPA | SPB | SPC | AJ/HA | BJ/HB | CJ/HC | DJ/HD |
|---|---|---|---|---|---|---|---|---|---|---|---|
| **Number of grooves** | **Face width $b_2$ for number of grooves z** | | | | | | | **$b_2 = (z - 1)\ e + 2\ f$** | | | |
| 2 | 28.30 | 43.50 | 66.60 | 28.00 | 35.00 | 44.00 | 59.50 | 33.88 | 42.05 | 57.40 | 82.53 |
| 3 | 38.60 | 61.00 | 95.20 | 40.00 | 50.00 | 63.00 | 85.00 | 49.76 | 61.10 | 82.80 | 119.06 |
| 4 | 48.90 | 78.50 | 123.80 | 52.00 | 65.00 | 82.00 | 110.50 | 65.64 | 80.15 | 108.20 | 155.59 |
| 5 | 59.20 | 96.00 | 152.40 | 64.00 | 80.00 | 101.00 | 136.00 | 81.52 | 99.20 | 133.60 | 192.12 |
| 6 | 69.50 | 113.50 | 181.00 | 76.00 | 95.00 | 120.00 | 161.50 | 97.40 | 118.25 | 159.00 | 228.65 |
| 7 | 79.80 | 131.00 | 209.60 | 88.00 | 110.00 | 139.00 | 187.00 | 113.28 | 137.30 | 184.40 | 265.18 |
| 8 | 90.10 | 148.50 | 238.20 | 100.00 | 125.00 | 158.00 | 212.50 | 129.16 | 156.35 | 209.80 | 301.71 |
| 9 | 100.40 | 166.00 | 266.80 | 112.00 | 140.00 | 177.00 | 238.00 | 145.04 | 175.40 | 235.20 | 338.24 |
| 10 | 110.70 | 183.50 | 295.40 | 124.00 | 155.00 | 196.00 | 263.50 | 160.92 | 194.45 | 260.60 | 374.77 |
| 11 | 121.00 | 201.00 | 324.00 | 136.00 | 170.00 | 215.00 | 289.00 | 176.80 | 213.50 | 286.00 | 401.30 |
| 12 | 131.30 | 218.50 | 352.60 | 148.00 | 185.00 | 234.00 | 314.50 | 192.68 | 232.55 | 311.40 | 447.83 |
| 13 | 141.60 | 236.00 | 381.20 | 160.00 | 200.00 | 253.00 | 340.00 | 20856 | 251.60 | 336.80 | 484.36 |
| 14 | 151.90 | 253.50 | 409.80 | 172.00 | 215.00 | 272.00 | 365.50 | 224.44 | 270.65 | 362.20 | 520.89 |
| 15 | 162.20 | 271.00 | 438.40 | 184.00 | 230.00 | 291.00 | 391.00 | 240.32 | 289.70 | 387.60 | 557.42 |
| 16 | 172.50 | 288.50 | 467.00 | 196.00 | 245.00 | 310.00 | 416.50 | 256.20 | 308.75 | 413.00 | 593.95 |
| 17 | 182.80 | 306.00 | 495.60 | 208.00 | 260.00 | 329.00 | 442.00 | 272.08 | 327.80 | 438.40 | 630.48 |
| 18 | 193.10 | 323.50 | 524.20 | 220.00 | 275.00 | 348.00 | 467.50 | 287.96 | 346.85 | 463.80 | 667.01 |
| 19 | 203.40 | 341.00 | 552.80 | 232.00 | 290.00 | 367.00 | 493.00 | 303.84 | 365.90 | 489.20 | 703.54 |
| 20 | 213.70 | 358.50 | 581.40 | 244.00 | 305.00 | 386.00 | 518.50 | 319.72 | 384.95 | 514.60 | 740.07 |
| 21 | 224.00 | 376.00 | 610.00 | 256.00 | 320.00 | 405.00 | 544.00 | 335.60 | 404.00 | 540.00 | 776.60 |
| 22 | 234.30 | 393.50 | 638.60 | 268.00 | 335.00 | 424.00 | 569.50 | 351.48 | 423.05 | 565.40 | 813.13 |
| 23 | 244.60 | 411.00 | 667.20 | 280.00 | 350.00 | 443.00 | 595.00 | 367.36 | 442.10 | 590.80 | 849.66 |
| 24 | 254.90 | 428.50 | 695.80 | 292.00 | 365.00 | 462.00 | 620.50 | 383.24 | 461.15 | 616.20 | 886.19 |
| 25 | 265.20 | 446.00 | 724.40 | 304.00 | 380.00 | 481.00 | 646.00 | 399.12 | 480.20 | 641.60 | 922.72 |
| 26 | 275.50 | 463.50 | 753.00 | 316.00 | 395.00 | 500.00 | 671.50 | 415.00 | 499.25 | 667.00 | 959.25 |
| 27 | 285.80 | 481.00 | 781.60 | 328.00 | 410.00 | 519.00 | 697.00 | 430.88 | 518.30 | 692.40 | 995.78 |
| 28 | 296.10 | 498.50 | 810.20 | 340.00 | 425.00 | 538.00 | 722.50 | 446.76 | 537.35 | 717.80 | 1032.31 |
| 29 | 306.40 | 516.00 | 838.80 | 352.00 | 440.00 | 557.00 | 748.00 | 462.64 | 556.40 | 743.20 | 1068.84 |
| 30 | 316.70 | 533.50 | 867.40 | 364.00 | 455.00 | 576.00 | 773.50 | 478.52 | 575.45 | 768.60 | 1105.37 |
| 31 | 327.00 | 551.00 | 896.00 | 376.00 | 470.00 | 595.00 | 799.00 | 494.40 | 594.50 | 794.00 | 1141.90 |
| 32 | 337.30 | 568.50 | 924.60 | 388.00 | 485.00 | 614.00 | 824.50 | 510.28 | 613.55 | 819.40 | 1178.43 |
| 33 | 347.60 | 586.00 | 953.20 | 400.00 | 500.00 | 633.00 | 850.00 | 526.16 | 632.60 | 844.80 | 1214.96 |
| 34 | 357.90 | 603.50 | 981.80 | 412.00 | 515.00 | 652.00 | 875.50 | 542.04 | 651.65 | 870.20 | 1251.49 |
| 35 | 368.20 | 621.00 | 1010.40 | 424.00 | 530.00 | 671.00 | 901.00 | 557.92 | 670.70 | 895.60 | 1288.02 |
| 36 | 378.50 | 638.50 | 1039.00 | 436.00 | 545.00 | 690.00 | 926.50 | 573.80 | 689.75 | 921.00 | 1324.55 |
| 37 | 388.80 | 656.00 | 1067.60 | 448.00 | 560.00 | 709.00 | 952.00 | 589.68 | 708.80 | 946.40 | 1361.08 |
| 38 | 399.10 | 673.50 | 1096.20 | 460.00 | 575.00 | 728.00 | 977.50 | 605.56 | 727.85 | 971.80 | 1397.61 |
| 39 | 409.40 | 691.00 | 1124.80 | 472.00 | 590.00 | 747.00 | 1003.00 | 621.44 | 746.90 | 997.20 | 1434.14 |
| 40 | 419.70 | 708.50 | 1153.40 | 484.00 | 605.00 | 766.00 | 1028.50 | 637.32 | 765.95 | 1022.60 | 1470.67 |

**For KB-sets observe systematic classification.**

# Standard Range
## Deep Grooved Pulleys

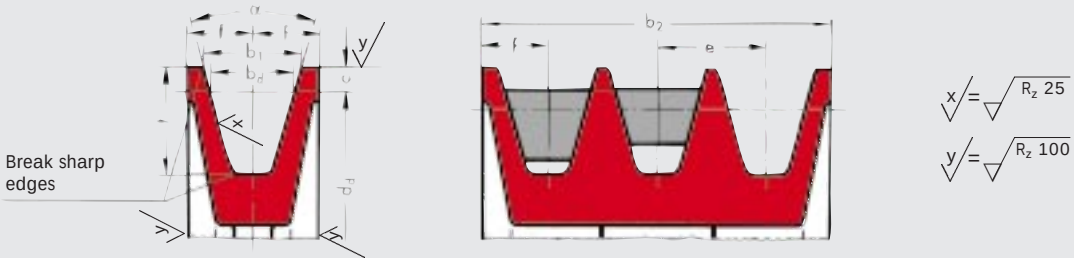


*Table 15*

| **Section** DIN 7753 Part 1 / ISO designation | | **SPZ** | **SPA** | **SPB** | **SPC** |
|---|---|---|---|---|---|
| For V-belts according to DIN 2215 and 2216 | | 10 | 13 | 17 | 22 |
| $b_d$ | | 8.5 | 11.0 | 14.0 | 19.0 |
| $b_1 \approx$ | $\alpha = 34°$ | 11.0 | 15.0 | 18.9 | 26.3 |
| | $\alpha = 38°$ | 11.3 | 15.4 | 19.5 | 27.3 |
| c | | 4.0 | 6.5 | 8.0 | 12.0 |
| e | | 14 ± 0.3 | 18 ± 0.3 | 23.0 ± 0.4 | 31 ± 0.5 |
| f | | 8 ± 0.6 | 10 ± 0.6 | 12.5 ± 0.8 | 17 ± 1.0 |
| $t_{min}$ | | 13 | 18 | 22.5 | 31.5 |
| $\alpha$ | for datum diameter $d_d$ for wedge belts DIN 7753 Part 1 | 34° ± 1° $d_d$ 63 to 80 | 34° ± 1° $d_d$ 90 to 118 | 34° ± 1° $d_d$ 140 to 190 | 34° ± 30‘ $d_d$ 224 to 315 |
| | | 38° ± 1° $d_d$ > 80 | 38° ± 1° $d_d$ >118 | 38° ± 1° $d_d$ > 190 | 38° ± 30‘ $d_d$ > 315 |
| $\alpha$ | for datum diameter $d_d$ with classical V-belts according to DIN 2215 | 34° ± 1° $d_d$ 50 to 80 | 34° ± 1° $d_d$ 71 to 118 | 34° ± 1° $d_d$ 112 to 190 | 34° ± 30‘ $d_d$ 180 to 315 |
| | | 38° ± 1° $d_d$ > 80 | 38° ± 1° $d_d$ >118 | 38° ± 1° $d_d$ > 190 | 38° ± 30‘ $d_d$ > 315 |
| Face width $b_2$ for number of grooves z $b_2 = (z - 1)\, e + 2\, f$ | **1** | 16 | 20 | 25 | 34 |
| | **2** | 29 | 37 | 47 | 64 |
| | **3** | 42 | 54 | 69 | 94 |
| | **4** | 55 | 71 | 91 | 124 |
| | **5** | 68 | 88 | 113 | 154 |
| | **6** | 81 | 105 | 135 | 184 |
| | **7** | 94 | 122 | 157 | 214 |
| | **8** | 107 | 139 | 179 | 244 |
| | **9** | 120 | 156 | 201 | 274 |
| | **10** | 133 | 173 | 223 | 304 |
| | **11** | 146 | 190 | 245 | 334 |
| | **12** | 159 | 207 | 267 | 364 |

Please note the minimum pulley diameters, page 11.
**Warning: Do not** use Kraftbands in deep grooved pulleys.

optibelt
Power Transmission

# Standard Range

## optibelt KS V-Grooved Pulleys for Taper Bushes – Grooves to DIN 2211

### Section SPZ / 10

| Datum diameter $d_d$ (mm) | No. of grooves | Type | | Weight without bush (≈ kg) | Taper bush |
|---|---|---|---|---|---|
| 50▲ | 1 | ● | 11 | 0.30 | 1008 |
| | 2 | ● | 11 | 0.40 | 1008 |
| 56▲ | 1 | ● | 11 | 0.40 | 1008 |
| | 2 | ● | 11 | 0.50 | 1108 |
| 60▲ | 1 | ● | 8 | 0.20 | 1008 |
| | 2 | ● | 11 | 0.60 | 1108 |
| 63 | 1 | ● | 8 | 0.20 | 1108 |
| | 2 | ● | 6 | 0.30 | 1108 |
| | 3 | ● | 6 | 0.40 | 1108 |
| 67 | 1 | ● | 8 | 0.30 | 1108 |
| | 2 | ● | 6 | 0.40 | 1108 |
| | 3 | ● | 6 | 0.50 | 1108 |
| 71 | 1 | ● | 8 | 0.30 | 1108 |
| | 2 | ● | 6 | 0.40 | 1108 |
| | 3 | ● | 6 | 0.60 | 1108 |
| 75 | 1 | ● | 8 | 0.40 | 1108 |
| | 2 | ● | 6 | 0.40 | 1210 |
| | 3 | ● | 6 | 0.50 | 1210 |
| 80 | 1 | ● | 8 | 0.50 | 1210 |
| | 2 | ● | 6 | 0.60 | 1210 |
| | 3 | ● | 6 | 0.70 | 1210 |
| | 4 | ● | 6 | 0.80 | 1210 |
| 85 | 1 | ● | 8 | 0.60 | 1210 |
| | 2 | ● | 6 | 0.50 | 1610 |
| | 3 | ● | 6 | 0.60 | 1610 |
| | 4 | ● | 6 | 0.90 | 1610 |
| | 5 | ● | 6 | 1.00 | 1610 |
| 90 | 1 | ● | 8 | 0.70 | 1210 |
| | 2 | ● | 6 | 0.70 | 1610 |
| | 3 | ● | 6 | 0.80 | 1610 |
| | 4 | ● | 6 | 1.00 | 1610 |
| | 5 | ● | 6 | 1.20 | 1610 |
| 95 | 1 | ● | 8 | 0.70 | 1210 |
| | 2 | ● | 6 | 0.80 | 1610 |
| | 3 | ● | 6 | 0.90 | 1610 |
| | 4 | ● | 6 | 1.10 | 1610 |
| | 5 | ● | 6 | 1.30 | 1610 |
| 100 | 1 | ● | 8 | 0.80 | 1210 |
| | 2 | ● | 6 | 0.90 | 1610 |
| | 3 | ● | 6 | 1.10 | 1610 |
| | 4 | ● | 6 | 1.10 | 1610 |
| | 5 | ● | 6 | 1.30 | 2012 |
| | 6* | ● | 6 | 1.40 | 2012 |

▲ for Section 10 only

| Datum diameter $d_d$ (mm) | No. of grooves | Type | | Weight without bush (≈ kg) | Taper bush |
|---|---|---|---|---|---|
| 106 | 1 | ● | 8 | 0.9 | 1610 |
| | 2 | ● | 6 | 1.1 | 1610 |
| | 3 | ● | 6 | 1.3 | 1610 |
| | 4 | ● | 6 | 1.3 | 1610 |
| | 5 | ● | 6 | 1.5 | 2012 |
| | 6* | ● | 6 | 1.6 | 2012 |
| 112 | 1 | ● | 8 | 1.0 | 1610 |
| | 2 | ● | 6 | 1.3 | 1610 |
| | 3 | ● | 6 | 1.3 | 2012 |
| | 4 | ● | 6 | 1.5 | 2012 |
| | 5 | ● | 6 | 1.8 | 2012 |
| | 6* | ● | 6 | 1.9 | 2012 |
| 118 | 1 | ● | 8 | 0.9 | 1610 |
| | 2 | ● | 6 | 1.3 | 1610 |
| | 3 | ● | 6 | 1.6 | 2012 |
| | 4 | ● | 6 | 1.8 | 2012 |
| | 5 | ● | 6 | 1.8 | 2012 |
| | 6* | ● | 6 | 2.0 | 2517 |
| 125 | 1 | ● | 8 | 1.0 | 1610 |
| | 2 | ● | 6 | 1.4 | 1610 |
| | 3 | ● | 2 | 1.8 | 2012 |
| | 4 | ● | 2 | 2.2 | 2012 |
| | 5 | ● | 6 | 2.3 | 2012 |
| | 6* | ● | 6 | 2.5 | 2517 |
| 132 | 1 | ● | 8 | 1.1 | 1610 |
| | 2 | ● | 6 | 1.5 | 1610 |
| | 3 | ● | 2 | 2.3 | 2012 |
| | 4 | ● | 2 | 2.5 | 2012 |
| | 5 | ● | 6 | 2.7 | 2517 |
| | 6* | ● | 6 | 2.9 | 2517 |
| 140 | 1 | ● | 8 | 1.2 | 1610 |
| | 2 | ● | 2 | 1.7 | 1610 |
| | 3 | ● | 2 | 2.6 | 2012 |
| | 4 | ● | 2 | 2.9 | 2012 |
| | 5 | ● | 2 | 3.2 | 2517 |
| | 6* | ● | 2 | 3.5 | 2517 |
| | 8* | ● | 4 | 4.0 | 2517 |
| 150 | 1 | ● | 8 | 1.2 | 1610 |
| | 2 | ● | 8 | 2.0 | 2012 |
| | 3 | ● | 2 | 3.1 | 2012 |
| | 4 | ● | 2 | 3.7 | 2517 |
| | 5 | ● | 2 | 4.0 | 2517 |
| | 6* | ● | 2 | 4.4 | 2517 |
| | 8* | ● | 4 | 5.1 | 2517 |

| No. of grooves z | 1 | 2 | 3 | 4 | 5 | 6 | 8 |
|---|---|---|---|---|---|---|---|
| Face width $b_2$ (mm) | 16 | 28 | 40 | 52 | 64 | 76 | 100 |

| Taper bush | 1008 | 1108 | 1210 | 1610 | 2012 | 2517 | 3020 |
|---|---|---|---|---|---|---|---|
| Bore $d_2$ (mm) from … to … | 10-25 | 10-28 | 11-32 | 14-42 | 14-50 | 16-60 | 25-75 |

● Solid pulley
O Plate pulley (with or without lightening holes)
✕ Spoked pulley

Material: EN-GJL 200 (GG 20)
DIN 1691

* Non stock item

Bore diameter $d_2$ see page 65

optibelt
Power Transmission

# Standard Range

## optibelt KS V-Grooved Pulleys for Taper Bushes – Grooves to DIN 2211

### Section SPZ / 10

| Datum diameter $d_d$ (mm) | No. of grooves | Type | | Weight without bush (≈ kg) | Taper bush |
|---|---|---|---|---|---|
| 160 | 1 | ● | 8 | 1.3 | 1610 |
| | 2 | ● | 8 | 2.5 | 2012 |
| | 3 | ● | 2 | 3.6 | 2012 |
| | 4 | ● | 2 | 4.4 | 2517 |
| | 5 | ● | 2 | 4.8 | 2517 |
| | 6* | ● | 2 | 5.2 | 2517 |
| | 8* | ● | 4 | 5.6 | 2517 |
| 170 | 1 | ● | 8 | 1.5 | 1610 |
| | 2 | ● | 8 | 2.5 | 2012 |
| | 3 | O | 9 | 4.2 | 2012 |
| | 4 | ● | 2 | 5.3 | 2517 |
| | 5 | ● | 2 | 5.9 | 2517 |
| | 6* | ● | 2 | 6.5 | 2517 |
| 180 | 1 | ● | 8 | 1.6 | 1610 |
| | 2 | ● | 8 | 2.5 | 2012 |
| | 3 | O | 9 | 4.8 | 2012 |
| | 4 | O | 9 | 6.1 | 2517 |
| | 5 | O | 9 | 6.3 | 2517 |
| | 6* | O | 9 | 6.8 | 2517 |
| | 8* | ● | 4 | 7.1 | 3020 |
| 190 | 1 | ● | 8 | 1.8 | 1610 |
| | 2 | ● | 8 | 2.6 | 2012 |
| | 3 | O | 9 | 4.9 | 2012 |
| | 4 | O | 9 | 5.3 | 2517 |
| | 5 | O | 9 | 6.3 | 2517 |
| | 6* | O | 9 | 6.9 | 2517 |
| 200 | 1 | ● | 8 | 2.3 | 2012 |
| | 2 | ● | 8 | 2.8 | 2012 |
| | 3 | O | 9 | 3.5 | 2012 |
| | 4 | O | 9 | 4.7 | 2517 |
| | 5 | O | 9 | 5.5 | 2517 |
| | 6* | O | 9 | 6.1 | 2517 |
| | 8* | ● | 4 | 9.3 | 3020 |
| 224 | 1 | O | 5 | 2.5 | 2012 |
| | 2 | O | 5 | 3.2 | 2012 |
| | 3 | O | 9 | 3.9 | 2012 |
| | 4 | O | 9 | 5.2 | 2517 |
| | 5 | O | 9 | 6.0 | 2517 |
| | 6* | O | 9 | 6.6 | 2517 |
| | 8* | ● | 4 | 11.8 | 3020 |
| 250 | 1 | x | 7 | 2.8 | 2012 |
| | 2 | x | 7 | 3.5 | 2012 |
| | 3 | x | 10 | 4.3 | 2012 |
| | 4 | x | 10 | 5.7 | 2517 |
| | 5 | x | 10 | 7.0 | 2517 |
| | 6 | x | 10 | 7.0 | 2517 |
| | 8* | x | 10 | 10.5 | 3020 |
| 280 | 1 | x | 7 | 2.9 | 2012 |
| | 2 | x | 7 | 4.0 | 2012 |
| | 3 | x | 7 | 5.3 | 2517 |
| | 4 | x | 10 | 6.4 | 2517 |
| | 5 | x | 10 | 7.1 | 2517 |
| | 6* | x | 10 | 7.8 | 2517 |
| | 8* | x | 10 | 10.8 | 3020 |
| 315 | 1 | x | 7 | 3.1 | 2012 |
| | 2 | x | 7 | 4.2 | 2012 |
| | 3 | x | 7 | 6.1 | 2517 |
| | 4 | x | 10 | 7.6 | 2517 |
| | 5 | x | 10 | 8.6 | 2517 |
| | 6* | x | 10 | 9.3 | 2517 |
| 355 | 1 | x | 7 | 3.5 | 2012 |
| | 2 | x | 7 | 5.1 | 2012 |
| | 3 | x | 7 | 7.3 | 2517 |
| | 4 | x | 10 | 8.9 | 2517 |
| | 5 | x | 10 | 10.0 | 2517 |
| | 6* | x | 10 | 10.7 | 2517 |
| | 8* | x | 10 | 16.0 | 3030 |
| 400 | 1 | x | 7 | 6.0 | 2012 |
| | 2 | x | 7 | 6.3 | 2517 |
| | 3 | x | 7 | 8.0 | 2517 |
| | 4 | x | 10 | 10.1 | 2517 |
| | 5 | x | 10 | 11.7 | 3020 |
| | 6* | x | 10 | 14.5 | 3020 |
| | 8* | x | 10 | 18.2 | 3030 |
| 450 | 1 | x | 7 | 6.1 | 2517 |
| | 2 | x | 7 | 8.2 | 2517 |
| | 3 | x | 7 | 9.8 | 2517 |
| | 4 | x | 10 | 11.8 | 3020 |
| | 5 | x | 10 | 13.9 | 3020 |
| | 6* | x | 10 | 16.9 | 3030 |
| | 8* | x | 10 | 24.0 | 3535 |
| 500 | 2 | x | 7 | 9.1 | 2517 |
| | 3 | x | 7 | 11.4 | 2517 |
| | 4 | x | 10 | 14.3 | 3020 |
| | 5 | x | 10 | 17.6 | 3020 |
| | 6* | x | 10 | 19.9 | 3020 |
| 630 | 3 | x | 7 | 15.9 | 2517 |
| | 4 | x | 10 | 20.0 | 3020 |
| | 5 | x | 10 | 22.7 | 3020 |
| | 6* | x | 7 | 33.6 | 3535 |

| No. of grooves z | 1 | 2 | 3 | 4 | 5 | 6 | 8 |
|---|---|---|---|---|---|---|---|
| Face width $b_2$ (mm) | 16 | 28 | 40 | 52 | 64 | 76 | 100 |

| Taper bush | 1610 | 2012 | 2517 | 3020 | 3030 | 3535 |
|---|---|---|---|---|---|---|
| Bore $d_2$ (mm) from ... to ... | 14-42 | 14-50 | 16-60 | 25-75 | 35-75 | 35-90 |

● Solid pulley
O Plate pulley (with or without lightening holes)
X Spoked pulley

Material: EN-GJL 200 (GG 20)
DIN 1691

* Non stock item

Bore diameter $d_2$ see page 65

# Standard Range

## optibelt KS V-Grooved Pulleys for Taper Bushes – Grooves to DIN 2211

### Section SPA / 13

| Datum diameter $d_d$ (mm) | No. of grooves | Type | | Weight without bush (≈ kg) | Taper bush |
|---|---|---|---|---|---|
| 63▲ | 1 | ● | 11 | 0.60 | 1108 |
| | 2 | ● | 11 | 0.80 | 1108 |
| 67▲ | 1 | ● | 8 | 0.30 | 1108 |
| | 2 | ● | 6 | 0.50 | 1108 |
| 71▲ | 1 | ● | 8 | 0.30 | 1108 |
| | 2 | ● | 6 | 0.50 | 1108 |
| | 3 | ● | 6 | 0.70 | 1108 |
| 75▲ | 1 | ● | 8 | 0.40 | 1108 |
| | 2 | ● | 6 | 0.60 | 1108 |
| | 3 | ● | 6 | 0.80 | 1108 |
| 80▲ | 1 | ● | 8 | 0.50 | 1210 |
| | 2 | ● | 6 | 0.60 | 1210 |
| | 3 | ● | 6 | 0.90 | 1210 |
| 85▲ | 1 | ● | 8 | 0.60 | 1210 |
| | 2 | ● | 6 | 0.70 | 1210 |
| | 3 | ● | 6 | 1.00 | 1210 |
| 90 | 1 | ● | 8 | 0.70 | 1210 |
| | 2 | ● | 6 | 0.70 | 1610 |
| | 3 | ● | 6 | 1.00 | 1610 |
| | 4 | ● | 6 | 1.20 | 1615 |
| 95 | 1 | ● | 8 | 0.80 | 1210 |
| | 2 | ● | 6 | 0.90 | 1610 |
| | 3 | ● | 6 | 1.10 | 1610 |
| | 4 | ● | 6 | 1.40 | 1615 |
| 100 | 1 | ● | 8 | 0.80 | 1610 |
| | 2 | ● | 6 | 0.90 | 1610 |
| | 3 | ● | 2 | 1.20 | 1610 |
| | 4 | ● | 2 | 1.70 | 1610 |
| | 5 | ● | 6 | 1.90 | 1610 |
| 106 | 1 | ● | 8 | 0.90 | 1610 |
| | 2 | ● | 6 | 1.10 | 1610 |
| | 3 | ● | 2 | 1.40 | 1610 |
| | 4 | ● | 6 | 2.00 | 2012 |
| | 5 | ● | 6 | 2.00 | 2012 |
| 112 | 1 | ● | 8 | 1.00 | 1610 |
| | 2 | ● | 6 | 1.20 | 1610 |
| | 3 | ● | 6 | 1.30 | 2012 |
| | 4 | ● | 6 | 1.90 | 2012 |
| | 5 | ● | 6 | 2.10 | 2012 |
| 118 | 1 | ● | 8 | 1.20 | 1610 |
| | 2 | ● | 6 | 1.40 | 1610 |
| | 3 | ● | 2 | 1.80 | 2012 |
| | 4 | ● | 2 | 2.00 | 2012 |
| | 5 | ● | 2 | 2.40 | 2012 |
| 125 | 1 | ● | 8 | 1.40 | 1610 |
| | 2 | ● | 2 | 1.70 | 1610 |
| | 3 | ● | 2 | 2.00 | 2012 |
| | 4 | ● | 2 | 2.50 | 2012 |
| | 5 | ● | 2 | 2.70 | 2012 |
| 132 | 1 | ● | 8 | 1.60 | 1610 |
| | 2 | ● | 2 | 1.80 | 2012 |
| | 3 | ● | 2 | 2.30 | 2012 |
| | 4 | ● | 2 | 2.60 | 2517 |
| | 5 | ● | 2 | 2.90 | 2517 |
| 140 | 1 | ● | 8 | 1.8 | 1610 |
| | 2 | ● | 2 | 2.0 | 2012 |
| | 3 | ● | 2 | 2.8 | 2517 |
| | 4 | ● | 2 | 3.1 | 2517 |
| | 5 | ● | 2 | 3.4 | 2517 |
| 150 | 1 | ● | 8 | 1.4 | 1610 |
| | 2 | ● | 2 | 2.4 | 2012 |
| | 3 | ● | 2 | 3.5 | 2517 |
| | 4 | ● | 2 | 3.8 | 2517 |
| | 5 | ● | 2 | 4.2 | 2517 |
| 160 | 1 | O | 5 | 1.9 | 1610 |
| | 2 | ● | 2 | 2.9 | 2012 |
| | 3 | ● | 2 | 3.9 | 2517 |
| | 4 | ● | 2 | 4.4 | 2517 |
| | 5 | ● | 2 | 5.1 | 2517 |
| 170 | 1 | O | 5 | 2.0 | 1610 |
| | 2 | ● | 2 | 3.1 | 2012 |
| | 3 | ● | 2 | 4.6 | 2517 |
| | 4 | ● | 2 | 5.5 | 2517 |
| | 5 | ● | 2 | 5.9 | 3020 |
| 180 | 1 | O | 5 | 2.1 | 1610 |
| | 2 | O | 9 | 3.4 | 2012 |
| | 3 | ● | 2 | 5.1 | 2517 |
| | 4 | ● | 2 | 5.9 | 2517 |
| | 5 | ● | 2 | 6.2 | 3020 |
| 190 | 1 | O | 5 | 2.3 | 1610 |
| | 2 | O | 9 | 3.8 | 2012 |
| | 3 | ● | 2 | 5.4 | 2517 |
| | 4 | ● | 2 | 6.8 | 2517 |
| | 5 | ● | 2 | 7.4 | 3020 |

▲ for Section 13 only

| No. of grooves z | 1 | 2 | 3 | 4 | 5 |
|---|---|---|---|---|---|
| Face width $b_2$ (mm) | 20 | 35 | 50 | 65 | 80 |

| Taper bush | 1108 | 1210 | 1610 | 1615 | 2012 | 2517 | 3020 |
|---|---|---|---|---|---|---|---|
| Bore $d_2$ (mm) from … to … | 10-28 | 11-32 | 14-42 | 14-42 | 14-50 | 16-60 | 25-75 |

● Solid pulley
O Plate pulley (with or without lightening holes)
✕ Spoked pulley

Material: EN-GJL 200 (GG 20)
DIN 1691

Bore diameter $d_2$ see page 65

optibelt
Power Transmission

# Standard Range

## optibelt KS V-Grooved Pulleys for Taper Bushes – Grooves to DIN 2211

### Section SPA / 13

| Datum diameter $d_d$ (mm) | No. of grooves | Type | | Weight without bush (≈ kg) | Taper bush |
|---|---|---|---|---|---|
| 200 | 1 | O | 5 | 2.6 | 2012 |
| | 2 | O | 5 | 4.1 | 2517 |
| | 3 | O | 9 | 4.9 | 2517 |
| | 4 | ● | 2 | 7.4 | 3020 |
| | 5 | ● | 4 | 8.4 | 3020 |
| 212 | 1 | O | 5 | 2.7 | 2012 |
| | 2 | O | 5 | 4.3 | 2517 |
| | 3 | O | 9 | 5.2 | 2517 |
| | 4 | ● | 2 | 7.3 | 3020 |
| | 5 | ● | 2 | 8.2 | 3020 |
| 224 | 1 | x | 7 | 2.7 | 2012 |
| | 2 | O | 5 | 4.4 | 2517 |
| | 3 | O | 9 | 5.5 | 2517 |
| | 4 | ● | 2 | 7.4 | 3020 |
| | 5 | ● | 2 | 8.3 | 3020 |
| 236 | 1 | x | 7 | 2.8 | 2012 |
| | 2 | O | 5 | 4.6 | 2517 |
| | 3 | O | 9 | 5.7 | 2517 |
| | 4 | ● | 2 | 7.8 | 3020 |
| | 5 | ● | 2 | 8.7 | 3020 |
| 250 | 1 | x | 7 | 2.9 | 2012 |
| | 2 | x | 7 | 4.8 | 2517 |
| | 3 | O | 9 | 5.9 | 2517 |
| | 4 | O | 9 | 8.0 | 3020 |
| | 5 | O | 9 | 9.0 | 3020 |
| 280 | 1 | x | 7 | 3.3 | 2012 |
| | 2 | x | 7 | 5.4 | 2517 |
| | 3 | O | 9 | 6.7 | 2517 |
| | 4 | O | 9 | 8.8 | 3020 |
| | 5 | O | 5 | 15.5 | 3535 |
| 315 | 1 | x | 7 | 3.6 | 2012 |
| | 2 | x | 7 | 6.0 | 2517 |
| | 3 | O | 5 | 8.3 | 3020 |
| | 4 | O | 9 | 9.7 | 3020 |
| | 5 | O | 5 | 17.0 | 3535 |
| 355 | 1 | x | 7 | 4.2 | 2012 |
| | 2 | x | 7 | 6.7 | 2517 |
| | 3 | x | 7 | 9.2 | 3020 |
| | 4 | x | 10 | 11.0 | 3020 |
| | 5 | x | 7 | 18.6 | 3535 |
| 400 | 1 | x | 7 | 4.9 | 2012 |
| | 2 | x | 7 | 8.1 | 2517 |
| | 3 | x | 7 | 11.0 | 3020 |
| | 4 | x | 10 | 12.8 | 3020 |
| | 5 | x | 7 | 21.0 | 3535 |
| 450 | 1 | x | 7 | 7.0 | 2012 |
| | 2 | x | 7 | 10.3 | 2517 |
| | 3 | x | 7 | 14.1 | 3020 |
| | 4 | x | 10 | 15.5 | 3020 |
| | 5 | x | 7 | 24.3 | 3535 |
| 500 | 1 | x | 7 | 8.0 | 2517 |
| | 2 | x | 7 | 11.6 | 2517 |
| | 3 | x | 7 | 16.0 | 3020 |
| | 4 | x | 10 | 18.2 | 3020 |
| | 5 | x | 7 | 27.3 | 3535 |
| 560 | 1 | x | 7 | 11.6 | 2517 |
| | 2 | x | 7 | 15.5 | 3020 |
| | 3 | x | 7 | 17.8 | 3020 |
| | 4 | x | 7 | 26.7 | 3535 |
| | 5 | x | 7 | 30.4 | 3535 |
| 630 | 1 | x | 7 | 10.1 | 2517 |
| | 2 | x | 7 | 16.0 | 3020 |
| | 3 | x | 7 | 22.0 | 3020 |
| | 4 | x | 7 | 30.8 | 3535 |
| | 5 | x | 7 | 33.7 | 3535 |

| No. of grooves z | 1 | 2 | 3 | 4 | 5 |
|---|---|---|---|---|---|
| Face width $b_2$ (mm) | 20 | 35 | 50 | 65 | 80 |

| Taper bush | 2012 | 2517 | 3020 | 3535 |
|---|---|---|---|---|
| Bore $d_2$ (mm) from ... to ... | 14-50 | 16-60 | 25-75 | 35-90 |

● Solid pulley
O Plate pulley (with or without lightening holes)
X Spoked pulley

Material: EN-GJL 200 (GG 20)
DIN 1691

Bore diameter $d_2$ see page 65

optibelt
Power Transmission

# Standard Range

## optibelt KS V-Grooved Pulleys for Taper Bushes – Grooves to DIN 2211

### Section SPB / 17

| Datum diameter $d_d$ (mm) | No. of grooves | Type | | Weight without bush (≈ kg) | Taper bush |
|---|---|---|---|---|---|
| 100▲ | 1 | ● | 1 | 0.9 | 1610 |
| | 2 | ● | 6 | 1.2 | 1610 |
| | 3 | ● | 6 | 1.7 | 1610 |
| 112▲ | 1 | ● | 1 | 1.1 | 1610 |
| | 2 | ● | 6 | 1.5 | 1610 |
| | 3 | ● | 6 | 2.0 | 1610 |
| 118▲ | 1 | ● | 1 | 1.3 | 1610 |
| | 2 | ● | 6 | 1.7 | 1610 |
| | 3 | ● | 6 | 2.3 | 1610 |
| 125▲ | 1 | ● | 1 | 1.5 | 1610 |
| | 2 | ● | 2 | 1.9 | 2012 |
| | 3 | ● | 2 | 2.4 | 2012 |
| | 4 | ● | 4 | 3.0 | 2012 |
| | 5 | ● | 6 | 3.5 | 2012 |
| 132▲ | 1 | ● | 1 | 1.8 | 1610 |
| | 2 | ● | 2 | 2.2 | 2012 |
| | 3 | ● | 2 | 2.8 | 2012 |
| | 4 | ● | 4 | 3.4 | 2012 |
| | 5 | ● | 4 | 3.7 | 2012 |
| 140 | 1 | ● | 1 | 2.3 | 1610 |
| | 2 | ● | 2 | 2.7 | 2012 |
| | 3 | ● | 2 | 3.3 | 2012 |
| | 4 | ● | 2 | 3.7 | 2517 |
| | 5 | ● | 2 | 4.5 | 2517 |
| | 6 | ● | 4 | 4.6 | 2517 |
| 150 | 1 | ● | 1 | 2.7 | 1610 |
| | 2 | ● | 2 | 3.1 | 2012 |
| | 3 | ● | 2 | 3.9 | 2517 |
| | 4 | ● | 2 | 4.4 | 2517 |
| | 5 | ● | 4 | 5.2 | 2517 |
| | 6 | ● | 4 | 5.6 | 2517 |
| 160 | 1 | ● | 1 | 2.5 | 1610 |
| | 2 | ● | 2 | 2.9 | 2012 |
| | 3 | ● | 2 | 4.2 | 2517 |
| | 4 | ● | 4 | 4.9 | 2517 |
| | 5 | ● | 4 | 6.0 | 2517 |
| | 6 | ● | 4 | 5.4 | 3020 |
| 170 | 1 | ● | 1 | 2.9 | 1610 |
| | 2 | ● | 2 | 3.3 | 2012 |
| | 3 | ● | 2 | 4.9 | 2517 |
| | 4 | ● | 4 | 5.7 | 2517 |
| | 5 | ● | 4 | 6.1 | 3020 |
| | 6 | ● | 4 | 6.5 | 3020 |
| | 8 | ● | 4 | 8.0 | 3020 |
| 180 | 1 | ● | 1 | 4.1 | 1610 |
| | 2 | ● | 8 | 4.5 | 2517 |
| | 3 | ● | 2 | 5.5 | 2517 |
| | 4 | ● | 4 | 6.9 | 2517 |
| | 5 | ● | 4 | 7.1 | 3020 |
| | 6 | ● | 4 | 7.7 | 3020 |
| | 8 | ● | 4 | 9.5 | 3020 |
| 190 | 1 | ● | 8 | 4.6 | 2012 |
| | 2 | ● | 8 | 5.0 | 2517 |
| | 3 | ● | 2 | 6.3 | 2517 |
| | 4 | ● | 4 | 7.6 | 2517 |
| | 5 | ● | 4 | 8.1 | 3020 |
| | 6 | ● | 4 | 9.2 | 3020 |
| | 8 | ● | 4 | 11.2 | 3030 |
| 200 | 1 | ● | 8 | 5.0 | 2012 |
| | 2 | ● | 8 | 5.4 | 2517 |
| | 3 | ● | 2 | 6.5 | 2517 |
| | 4 | ● | 2 | 8.8 | 3020 |
| | 5 | ● | 2 | 9.1 | 3020 |
| | 6 | ● | 4 | 10.3 | 3020 |
| | 8 | ● | 4 | 13.5 | 3535 |
| 212 | 1 | ● | 8 | 4.2 | 2012 |
| | 2 | ● | 8 | 4.9 | 2517 |
| | 3 | ● | 2 | 6.0 | 2517 |
| | 4 | ● | 2 | 9.8 | 3020 |
| | 5 | ● | 2 | 11.0 | 3020 |
| | 6 | ● | 4 | 14.3 | 3535 |
| | 8 | ● | 4 | 16.6 | 3535 |
| 224 | 1 | ● | 8 | 4.7 | 2012 |
| | 2 | ● | 8 | 5.3 | 2517 |
| | 3 | ● | 2 | 6.3 | 2517 |
| | 4 | ● | 2 | 11.3 | 3020 |
| | 5 | ● | 2 | 12.7 | 3020 |
| | 6 | ● | 4 | 17.0 | 3535 |
| | 8 | ● | 4 | 19.3 | 3535 |
| | 10 | ● | 4 | 21.8 | 3535 |
| 236 | 1 | ● | 8 | 5.0 | 2012 |
| | 2 | ● | 8 | 5.5 | 2517 |
| | 3 | x | 10 | 7.0 | 2517 |
| | 4 | x | 10 | 14.5 | 3020 |
| | 5 | ● | 6 | 16.9 | 3535 |
| | 6 | ● | 4 | 20.0 | 3535 |
| | 8 | ● | 4 | 22.3 | 3535 |
| | 10 | ● | 4 | 25.3 | 3535 |

▲ for Section 17 only

| No. of grooves z | 1 | 2 | 3 | 4 | 5 | 6 | 8 | 10 |
|---|---|---|---|---|---|---|---|---|
| Face width $b_2$ (mm) | 25 | 44 | 63 | 82 | 101 | 120 | 158 | 196 |

| Taper bush | 1610 | 2012 | 2517 | 3020 | 3030 | 3535 |
|---|---|---|---|---|---|---|
| Bore $d_2$ (mm) from … to … | 14-42 | 14-50 | 16-60 | 25-75 | 35-75 | 35-90 |

● Solid pulley
O Plate pulley (with or without lightening holes)
X Spoked pulley

Material: EN-GJL 200 (GG 20)
DIN 1691

Bore diameter $d_2$ see page 65

optibelt
Power Transmission

# Standard Range

## optibelt KS V-Grooved Pulleys for Taper Bushes – Grooves to DIN 2211

### Section SPB / 17

| Datum diameter $d_d$ (mm) | No. of grooves | Type | | Weight without bush (≈ kg) | Taper bush |
|---|---|---|---|---|---|
| 250 | 1 | ● | 8 | 5.4 | 2012 |
| | 2 | x | 7 | 5.5 | 2517 |
| | 3 | ● | 2 | 7.7 | 3020 |
| | 4 | ● | 2 | 19.6 | 3020 |
| | 5 | ● | 2 | 21.7 | 3535 |
| | 6 | ● | 4 | 23.3 | 3535 |
| | 8 | ● | 4 | 27.5 | 3535 |
| | 10 | ● | 4 | 29.3 | 3535 |
| 265 | 2 | ● | 7 | 6.2 | 2517 |
| | 3 | O | 9 | 8.0 | 3020 |
| | 4 | O | 9 | 9.5 | 3020 |
| | 6 | O | 9 | 16.7 | 3525 |
| | 8 | O | 9 | 24.0 | 3525 |
| 280 | 1 | x | 7 | 6.1 | 2012 |
| | 2 | x | 7 | 6.8 | 2517 |
| | 3 | x | 10 | 8.6 | 3020 |
| | 4 | O | 9 | 10.1 | 3020 |
| | 5 | O | 9 | 17.8 | 3535 |
| | 6 | O | 9 | 19.6 | 3535 |
| | 8 | O | 9 | 26.7 | 3535 |
| | 10 | O | 9 | 30.5 | 3535 |
| 300 | 2 | x | 7 | 7.3 | 2517 |
| | 3 | x | 10 | 9.2 | 3020 |
| | 4 | O | 9 | 14.3 | 3020 |
| | 5 | O | 9 | 18.2 | 3535 |
| | 6 | O | 9 | 21.9 | 3535 |
| | 8 | O | 9 | 26.2 | 3535 |
| 315 | 1 | x | 7 | 7.2 | 2012 |
| | 2 | x | 7 | 7.8 | 2517 |
| | 3 | x | 10 | 9.6 | 3020 |
| | 4 | O | 5 | 17.1 | 3535 |
| | 5 | O | 9 | 18.8 | 3535 |
| | 6 | O | 9 | 23.0 | 3535 |
| | 8 | O | 9 | 26.0 | 3535 |
| | 10 | O | 9 | 31.5 | 3535 |
| 335 | 2 | x | 7 | 7.8 | 2517 |
| | 3 | x | 10 | 10.5 | 3020 |
| | 4 | x | 7 | 18.3 | 3535 |
| | 5 | x | 10 | 19.5 | 3535 |
| | 6 | x | 10 | 22.0 | 3535 |
| | 8 | x | 10 | 28.2 | 3535 |
| | 10* | x | 10 | 36.0 | 4040 |
| 355 | 2 | x | 7 | 8.7 | 3020 |
| | 3 | x | 10 | 10.8 | 3020 |
| | 4 | x | 7 | 18.6 | 3535 |
| | 5 | x | 10 | 20.8 | 3535 |
| | 6 | O | 9 | 22.8 | 3535 |
| | 8 | x | 10 | 27.0 | 3535 |
| | 10* | x | 10 | 38.0 | 4040 |
| 375 | 2 | x | 7 | 9.5 | 3020 |
| | 3 | x | 10 | 11.5 | 3020 |
| | 4 | x | 10 | 16.5 | 3525 |
| | 6 | x | 10 | 25.0 | 3535 |
| | 8 | x | 10 | 28.0 | 4040 |
| 400 | 2 | x | 7 | 10.0 | 3020 |
| | 3 | x | 7 | 18.3 | 3535 |
| | 4 | x | 7 | 20.5 | 3535 |
| | 5 | x | 10 | 23.4 | 3535 |
| | 6 | x | 10 | 25.1 | 3535 |
| | 8 | x | 10 | 36.5 | 4040 |
| | 10* | x | 10 | 41.0 | 4040 |
| 425 | 2 | x | 7 | 11.5 | 3020 |
| | 3 | x | 7 | 18.0 | 3535 |
| | 4 | x | 10 | 19.5 | 3535 |
| | 6 | x | 10 | 25.1 | 4040 |
| | 8 | x | 10 | 52.5 | 4545 |
| 450 | 2 | x | 7 | 12.1 | 3020 |
| | 3 | x | 7 | 21.9 | 3535 |
| | 4 | x | 7 | 24.5 | 3535 |
| | 5 | x | 10 | 27.3 | 3535 |
| | 6 | x | 10 | 35.5 | 4040 |
| | 8 | x | 10 | 40.9 | 4040 |
| | 10* | x | 10 | 53.5 | 4545 |
| 500 | 2 | x | 7 | 13.2 | 3020 |
| | 3 | x | 7 | 23.1 | 3535 |
| | 4 | x | 7 | 26.6 | 3535 |
| | 5 | x | 10 | 29.9 | 3535 |
| | 6 | x | 10 | 38.9 | 4040 |
| | 8 | x | 10 | 45.5 | 4040 |
| | 10* | x | 10 | 61.0 | 4545 |
| 560 | 2 | x | 7 | 16.5 | 3030 |
| | 3 | x | 7 | 25.9 | 3535 |
| | 4 | x | 7 | 29.0 | 3535 |
| | 5 | x | 7 | 35.3 | 4040 |
| | 6 | x | 10 | 43.1 | 4040 |
| | 8 | x | 10 | 49.0 | 4545 |
| | 10* | x | 10 | 55.7 | 4545 |

| No. of grooves z | 1 | 2 | 3 | 4 | 5 | 6 | 8 | 10 |
|---|---|---|---|---|---|---|---|---|
| Face width $b_2$ (mm) | 25 | 44 | 63 | 82 | 101 | 120 | 158 | 196 |

| Taper bush | 2012 | 2517 | 3020 | 3030 | 3535 | 4040 | 4545 |
|---|---|---|---|---|---|---|---|
| Bore $d_2$ (mm) from ... to ... | 14-50 | 16-60 | 25-75 | 35-75 | 35-90 | 40-100 | 55-110 |

● Solid pulley
O Plate pulley (with or without lightening holes)
X Spoked pulley

Material: EN-GJL 200 (GG 20)
DIN 1691

* Non stock item

Bore diameter $d_2$ see page 65

optibelt
Power Transmission

# Standard Range

## optibelt KS V-Grooved Pulleys for Taper Bushes – Grooves to DIN 2211

### Section SPB / 17

| Datum diameter $d_d$ (mm) | No. of grooves | Type | | Weight without bush (≈ kg) | Taper bush | Datum diameter $d_d$ (mm) | No. of grooves | Type | | Weight without bush (≈ kg) | Taper bush |
|---|---|---|---|---|---|---|---|---|---|---|---|
| 630 | 2 | x | 7 | 18.5 | 3020 | | | | | | |
| | 3 | x | 7 | 28.9 | 3535 | | | | | | |
| | 4 | x | 7 | 33.3 | 3535 | | | | | | |
| | 5 | x | 7 | 43.1 | 4040 | | | | | | |
| | 6 | x | 10 | 49.2 | 4040 | | | | | | |
| | 8 | x | 10 | 62.0 | 4545 | | | | | | |
| | 10* | x | 10 | 72.0 | 4545 | | | | | | |
| 710 | 3 | x | 7 | 33.2 | 3535 | | | | | | |
| | 4 | x | 7 | 39.1 | 3535 | | | | | | |
| | 5 | x | 7 | 50.2 | 4040 | | | | | | |
| | 6 | x | 10 | 62.3 | 4545 | | | | | | |
| | 8 | x | 10 | 71.0 | 4545 | | | | | | |
| | 10* | x | 10 | 80.0 | 4545 | | | | | | |
| 800 | 3 | x | 7 | 36.7 | 3535 | | | | | | |
| | 4 | x | 7 | 48.8 | 4040 | | | | | | |
| | 5 | x | 7 | 56.1 | 4040 | | | | | | |
| | 6 | x | 10 | 71.4 | 4545 | | | | | | |
| | 8 | x | 10 | 90.9 | 4545 | | | | | | |
| | 10* | x | 10 | 102.0 | 4545 | | | | | | |
| 900 | 3 | x | 7 | 46.8 | 3535 | | | | | | |
| | 4 | x | 7 | 60.0 | 4040 | | | | | | |
| | 5 | x | 7 | 74.8 | 4545 | | | | | | |
| | 6 | x | 10 | 81.5 | 4545 | | | | | | |
| | 8 | x | 10 | 110.0 | 4545 | | | | | | |
| | 10* | x | 10 | 126.0 | 5050 | | | | | | |
| 1000 | 3 | x | 7 | 56.5 | 4040 | | | | | | |
| | 4 | x | 7 | 66.5 | 4040 | | | | | | |
| | 5 | x | 7 | 80.5 | 4545 | | | | | | |
| | 6 | x | 10 | 90.0 | 4545 | | | | | | |
| | 8 | x | 10 | 132.0 | 5050 | | | | | | |
| | 10* | x | 10 | 147.0 | 5050 | | | | | | |

| No. of grooves z | 2 | 3 | 4 | 5 | 6 | 8 | 10 |
|---|---|---|---|---|---|---|---|
| Face width $b_2$ (mm) | 44 | 63 | 82 | 101 | 120 | 158 | 196 |

| Taper bush | 3030 | 3535 | 4040 | 4545 | 5050 |
|---|---|---|---|---|---|
| Bore $d_2$ (mm) from … to … | 35-75 | 35-90 | 40-100 | 55-110 | 70-125 |

● Solid pulley
O Plate pulley (with or without lightening holes)
X Spoked pulley

Material: EN-GJL 200 (GG 20)
DIN 1691

* Non stock item

Bore diameter $d_2$ see page 65

optibelt
Power Transmission

# Standard Range

## optibelt KS V-Grooved Pulleys for Taper Bushes – Grooves to DIN 2211

### Section SPC/22

| Datum diameter $d_d$ (mm) | No. of grooves | Type | | Weight without bush (≈ kg) | Taper bush |
|---|---|---|---|---|---|
| 200▲ | 3 | ● | 4 | 9.0 | 2517 |
| | 4 | ● | 4 | 10.5 | 3020 |
| | 5 | ● | 4 | 14.0 | 3535 |
| | 6 | ● | 4 | 17.0 | 3535 |
| 212▲ | 3 | ● | 4 | 10.0 | 3020 |
| | 4 | ● | 4 | 12.5 | 3020 |
| | 5 | ● | 4 | 15.0 | 3535 |
| | 6 | ● | 4 | 18.0 | 3535 |
| 224 | 2 | ● | 4 | 8.1 | 3020 |
| | 3 | ● | 4 | 11.0 | 3020 |
| | 4 | ● | 4 | 14.0 | 3535 |
| | 5 | ● | 4 | 16.2 | 3535 |
| | 6 | ● | 4 | 19.0 | 3535 |
| | 8 | ● | 4 | 24.9 | 3535 |
| 236 | 3 | ● | 4 | 12.0 | 3020 |
| | 4 | ● | 4 | 17.2 | 3535 |
| | 5 | ● | 4 | 19.1 | 3535 |
| | 6 | ● | 4 | 20.8 | 3535 |
| | 8 | ● | 4 | 25.5 | 3535 |
| 250 | 2 | ● | 4 | 9.8 | 3020 |
| | 3 | ● | 4 | 14.5 | 3020 |
| | 4 | ● | 4 | 20.7 | 3535 |
| | 5 | ● | 4 | 22.8 | 3535 |
| | 6 | ● | 4 | 26.0 | 3535 |
| | 8 | ● | 4 | 29.7 | 3535 |
| | 10* | ● | 4 | 34.0 | 4040 |
| 265 | 3 | ● | 8 | 21.2 | 3535 |
| | 4 | O | 9 | 24.0 | 3535 |
| | 5 | O | 9 | 26.2 | 3535 |
| | 6 | O | 9 | 29.0 | 3535 |
| | 8 | O | 9 | 33.3 | 3535 |
| 280 | 3 | ● | 8 | 24.0 | 3535 |
| | 4 | O | 9 | 29.0 | 3535 |
| | 5 | O | 9 | 31.0 | 3535 |
| | 6 | O | 9 | 33.8 | 3535 |
| | 8 | O | 9 | 37.5 | 3535 |
| | 10* | O | 9 | 45.0 | 4040 |
| 300 | 3 | O | 5 | 21.0 | 3535 |
| | 4 | O | 9 | 25.0 | 3535 |
| | 5 | O | 9 | 28.5 | 3535 |
| | 6 | O | 9 | 29.0 | 3535 |
| | 8 | ● | 4 | 46.5 | 4040 |
| | 10* | O | 9 | 53.5 | 4545 |
| 315 | 3 | O | 5 | 21.6 | 3535 |
| | 4 | O | 9 | 24.6 | 3535 |
| | 5 | O | 9 | 29.0 | 3535 |
| | 6 | O | 9 | 31.4 | 3535 |
| | 8 | ● | 4 | 50.0 | 4040 |
| | 10* | O | 9 | 58.0 | 4545 |
| 335 | 3 | O | 5 | 22.5 | 3535 |
| | 4 | O | 9 | 26.5 | 3535 |
| | 5 | O | 9 | 30.0 | 3535 |
| | 6 | O | 9 | 35.0 | 3535 |
| | 8 | O | 9 | 58.0 | 4040 |
| 355 | 3 | O | 5 | 22.9 | 3535 |
| | 4 | O | 9 | 28.3 | 3535 |
| | 5 | O | 9 | 32.5 | 3535 |
| | 6 | O | 9 | 36.0 | 3535 |
| | 8 | O | 9 | 67.5 | 4040 |
| | 10* | O | 9 | 121.0 | 4545 |
| 375 | 3 | O | 5 | 23.8 | 3535 |
| | 4 | O | 9 | 30.0 | 3535 |
| | 5 | O | 9 | 33.0 | 3535 |
| | 6 | O | 9 | 45.5 | 4040 |
| | 8 | O | 9 | 68.0 | 4545 |
| 400 | 3 | x | 7 | 24.1 | 3535 |
| | 4 | x | 10 | 28.0 | 3535 |
| | 5 | x | 10 | 34.0 | 3535 |
| | 6 | O | 9 | 48.0 | 4040 |
| | 8 | O | 9 | 65.0 | 4545 |
| | 10* | O | 9 | 88.0 | 5050 |
| 425 | 3 | x | 7 | 26.0 | 3535 |
| | 4 | x | 10 | 31.0 | 3535 |
| | 5 | O | 9 | 45.0 | 4040 |
| | 6 | O | 9 | 58.0 | 4545 |
| | 8 | O | 9 | 74.0 | 4545 |
| 450 | 3 | x | 7 | 28.6 | 3535 |
| | 4 | x | 10 | 33.5 | 3535 |
| | 5 | x | 10 | 45.0 | 4040 |
| | 6 | O | 9 | 61.1 | 4545 |
| | 8 | O | 9 | 78.7 | 5050 |
| | 10* | O | 9 | 101.0 | 5050 |
| 475 | 3 | x | 7 | 40.0 | 3535 |
| | 4 | x | 10 | 47.0 | 3535 |
| | 5 | x | 10 | 47.2 | 4040 |
| | 6 | O | 9 | 62.8 | 4545 |
| | 8 | O | 9 | 81.5 | 5050 |

▲ for Section 22 only

| No. of grooves z | 3 | 4 | 5 | 6 | 8 | 10 |
|---|---|---|---|---|---|---|
| Face width $b_2$ (mm) | 85 | 110,5 | 136 | 161,5 | 212,5 | 263,5 |
| Taper bush | 2517 | 3020 | 3535 | 4040 | 4545 | 5050 |
| Bore $d_2$ (mm) from ... to ... | 16-60 | 25-75 | 35-90 | 40-100 | 55-110 | 70-125 |

● Solid pulley
O Plate pulley (with or without lightening holes)
X Spoked pulley

Material: EN-GJL 200 (GG 20)
DIN 1691

* Non stock item

Bore diameter $d_2$ see page 65

optibelt
Power Transmission

# Standard Range

## optibelt KS V-Grooved Pulleys for Taper Bushes – Grooves to DIN 2211

### Section SPC/22

| Datum diameter $d_d$ (mm) | No. of grooves | Type | | Weight without bush (≈ kg) | Taper bush | Datum diameter $d_d$ (mm) | No. of grooves | Type | | Weight without bush (≈ kg) | Taper bush |
|---|---|---|---|---|---|---|---|---|---|---|---|
| 500 | 3 | x | 7 | 30.9 | 3535 | | | | | | |
| | 4 | x | 10 | 39.0 | 3535 | | | | | | |
| | 5 | x | 10 | 48.7 | 4040 | | | | | | |
| | 6 | x | 10 | 60.2 | 4545 | | | | | | |
| | 8 | O | 9 | 87.4 | 5050 | | | | | | |
| | 10* | O | 9 | 127.0 | 5050 | | | | | | |
| 560 | 3 | x | 7 | 36.0 | 3535 | | | | | | |
| | 4 | x | 10 | 50.0 | 4040 | | | | | | |
| | 5 | x | 10 | 63.0 | 4545 | | | | | | |
| | 6 | x | 10 | 77.0 | 5050 | | | | | | |
| | 8 | x | 10 | 94.0 | 5050 | | | | | | |
| | 10* | O | 9 | 115.0 | 5050 | | | | | | |
| 630 | 3 | x | 7 | 48.5 | 4040 | | | | | | |
| | 4 | x | 7 | 61.0 | 4545 | | | | | | |
| | 5 | x | 10 | 77.0 | 5050 | | | | | | |
| | 6 | x | 10 | 86.0 | 5050 | | | | | | |
| | 8 | x | 10 | 105.5 | 5050 | | | | | | |
| | 10* | O | 9 | 130.0 | 5050 | | | | | | |
| 710 | 3 | x | 7 | — | 4040 | | | | | | |
| | 4 | x | 7 | — | 4545 | | | | | | |
| | 5 | x | 10 | — | 5050 | | | | | | |
| | 6 | x | 10 | — | 5050 | | | | | | |
| | 8 | x | 10 | — | 5050 | | | | | | |
| | 10* | O | 9 | — | 5050 | | | | | | |
| 800 | 3 | x | 7 | — | 4545 | | | | | | |
| | 4 | x | 7 | — | 5050 | | | | | | |
| | 5 | x | 10 | — | 5050 | | | | | | |
| | 6 | x | 10 | — | 5050 | | | | | | |
| | 8 | x | 10 | — | 5050 | | | | | | |
| | 10* | O | 9 | — | 5050 | | | | | | |
| 1000 | 5 | x | 10 | — | 5050 | | | | | | |
| | 6 | x | 10 | — | 5050 | | | | | | |
| | 8 | x | 10 | — | 5050 | | | | | | |
| | 10* | O | 9 | — | 5050 | | | | | | |
| 1250 | 5 | x | 10 | — | 5050 | | | | | | |
| | 6 | x | 10 | — | 5050 | | | | | | |
| | 8 | x | 10 | — | 5050 | | | | | | |
| | 10* | O | 9 | — | 5050 | | | | | | |

| No. of grooves z | 3 | 4 | 5 | 6 | 8 | 10 |
|---|---|---|---|---|---|---|
| Face width $b_2$ (mm) | 85 | 110,5 | 136 | 161,5 | 212,5 | 263,5 |

| Taper bush | 3535 | 4040 | 4545 | 5050 |
|---|---|---|---|---|
| Bore $d_2$ (mm) from … to … | 35-90 | 40-100 | 55-110 | 70-125 |

● Solid pulley
O Plate pulley (with or without lightening holes)
X Spoked pulley

Material: EN-GJL 200 (GG 20)
DIN 1691

* Non stock item

Bore diameter $d_2$ see page 65

optibelt
Power Transmission

# Standard Range

## optibelt KS V-Grooved Pulleys for Cylindrical Bore – Grooves according to DIN 2211

### Section SPZ / 10

| Datum diameter $d_d$ (mm) | No. of grooves | Type | Weight (≈ kg) | Finished bore $d_{max}$ (mm) | Distance through hub l (mm) | Datum diameter $d_d$ (mm) | No. of grooves | Type | Weight (≈ kg) | Finished bore $d_{max}$ (mm) | Distance through hub l (mm) |
|---|---|---|---|---|---|---|---|---|---|---|---|
| 45▲ | 1 | O | 0.23 | 16 | 24 | 132 | 1 | O | 0.81 | 30 | 24 |
| | 2 | O | 0.30 | 16 | 35 | | 2 | O | 1.30 | 38 | 35 |
| | 3 | O | 0.40 | 16 | 35 | | 3 | O | 1.62 | 40 | 40 |
| 50▲ | 1 | O | 0.30 | 20 | 24 | 140 | 1 | O | 0.92 | 28 | 24 |
| | 2 | O | 0.40 | 20 | 35 | | 2 | O | 1.40 | 38 | 38 |
| | 3 | O | 0.50 | 20 | 40 | | 3 | O | 1.69 | 38 | 40 |
| 56▲ | 1 | O | 0.32 | 20 | 24 | 150 | 1 | x | 1.05 | 28 | 24 |
| | 2 | O | 0.45 | 25 | 35 | | 2 | O | 1.50 | 38 | 38 |
| | 3 | O | 0.65 | 25 | 40 | | 3 | O | 1.85 | 38 | 40 |
| 63 | 1 | O | 0.34 | 25 | 24 | 160 | 1 | x | 1.22 | 32 | 30 |
| | 2 | O | 0.60 | 25 | 35 | | 2 | x | 1.60 | 38 | 38 |
| | 3 | O | 0.85 | 25 | 40 | | 3 | x | 2.40 | 42 | 40 |
| 71 | 1 | O | 0.34 | 25 | 24 | 170 | 1 | x | 1.66 | 40 | 30 |
| | 2 | O | 0.62 | 25 | 35 | | 2 | x | 1.85 | 40 | 38 |
| | 3 | O | 1.00 | 30 | 40 | | 3 | x | 3.00 | 42 | 40 |
| 75 | 1 | O | 0.35 | 24 | 24 | 180 | 1 | x | 2.10 | 32 | 30 |
| | 2 | O | 0.64 | 24 | 35 | | 2 | x | 3.05 | 38 | 38 |
| | 3 | O | 1.05 | 28 | 40 | | 3 | x | 3.50 | 42 | 40 |
| 80 | 1 | O | 0.35 | 25 | 24 | 190 | 1 | x | 2.25 | 35 | 30 |
| | 2 | O | 0.65 | 30 | 35 | | 2 | x | 2.35 | 35 | 38 |
| | 3 | O | 1.10 | 38 | 35 | | 3 | x | 4.00 | 35 | 40 |
| 85 | 1 | O | 0.30 | 25 | 24 | 200 | 1 | x | 2.40 | 32 | 38 |
| | 2 | O | 0.70 | 30 | 35 | | 2 | x | 2.85 | 38 | 38 |
| | 3 | O | 1.10 | 38 | 35 | | 3 | x | 4.45 | 42 | 40 |
| 90 | 1 | O | 0.38 | 25 | 24 | 212 | 1 | x | 2.60 | 35 | 30 |
| | 2 | O | 0.75 | 30 | 35 | | 2 | x | 3.40 | 35 | 38 |
| | 3 | O | 1.15 | 38 | 38 | | 3 | x | 5.00 | 38 | 40 |
| 95 | 1 | O | 0.40 | 28 | 24 | 225 | 1 | x | 2.80 | 32 | 38 |
| | 2 | O | 0.83 | 28 | 35 | | 2 | x | 4.00 | 38 | 38 |
| | 3 | O | 1.20 | 38 | 38 | | 3 | x | 5.30 | 42 | 40 |
| 100 | 1 | O | 0.48 | 28 | 24 | 250 | 1 | x | 3.30 | 32 | 38 |
| | 2 | O | 0.90 | 30 | 35 | | 2 | x | 4.80 | 38 | 38 |
| | 3 | O | 1.25 | 38 | 38 | | 3 | x | 6.00 | 42 | 40 |
| 106 | 1 | O | 0.50 | 30 | 24 | 280 | 1 | x | 3.85 | 35 | 34 |
| | 2 | O | 0.96 | 28 | 35 | | 2 | x | 5.20 | 42 | 38 |
| | 3 | O | 1.32 | 38 | 38 | | 3 | x | 7.00 | 48 | 40 |
| 112 | 1 | O | 0.54 | 28 | 24 | 315 | 1 | x | 4.35 | 35 | 34 |
| | 2 | O | 1.00 | 30 | 35 | | 2 | x | 6.80 | 42 | 38 |
| | 3 | O | 1.40 | 38 | 38 | | 3 | x | 8.25 | 48 | 40 |
| 118 | 1 | O | 0.60 | 28 | 24 | 355 | 1 | x | 4.60 | 35 | 34 |
| | 2 | O | 1.10 | 38 | 35 | | 2 | x | 8.00 | 42 | 40 |
| | 3 | O | 1.47 | 38 | 38 | | 3 | x | 10.00 | 48 | 45 |
| 125 | 1 | O | 0.70 | 28 | 24 | | | | | | |
| | 2 | O | 1.20 | 30 | 35 | | | | | | |
| | 3 | O | 1.55 | 38 | 40 | | | | | | |

▲ for Section 10 only

| No. of grooves z | 1 | 2 | 3 |
|---|---|---|---|
| Face width $b_2$ (mm) | 16 | 28 | 40 |

● Solid pulley
O Plate pulley (with or without lightening holes)
X Spoked pulley
Hub position: flush one side
Material: EN-GJL 200 (GG 20) - DIN 1691

# Standard Range

## optibelt KS V-Grooved Pulleys for Cylindrical Bore – Grooves according to DIN 2211

### Section SPA / 13

| Datum diameter $d_d$ (mm) | No. of grooves | Type | Weight (≈ kg) | Finished bore $d_{max}$ (mm) | Distance through hub l (mm) |
|---|---|---|---|---|---|
| 50▲ | 1 | O | 0.34 | 18 | 34 |
| | 2 | O | 0.48 | 18 | 49 |
| | 3 | O | 0.55 | 18 | 47 |
| 56▲ | 1 | O | 0.42 | 20 | 34 |
| | 2 | O | 0.62 | 20 | 49 |
| | 3 | O | 0.74 | 20 | 47 |
| 63▲ | 1 | O | 0.52 | 25 | 34 |
| | 2 | O | 0.77 | 25 | 49 |
| | 3 | O | 0.85 | 25 | 47 |
| | 4▽ | O | 1.23 | 25 | 60 |
| | 5▽ | O | 1.48 | 25 | 70 |
| 71▲ | 1 | O | 0.50 | 25 | 34 |
| | 2 | O | 0.89 | 28 | 49 |
| | 3 | O | 0.96 | 32 | 42 |
| | 4▽ | O | 1.47 | 32 | 60 |
| | 5▽ | O | 1.83 | 32 | 70 |
| 75▲ | 1 | O | 0.53 | 24 | 34 |
| | 2 | O | 1.02 | 24 | 49 |
| | 3 | O | 1.08 | 24 | 42 |
| | 4▽ | O | 1.76 | 24 | 60 |
| | 5▽ | O | 1.92 | 28 | 82 |
| 80▲ | 1 | O | 0.56 | 28 | 34 |
| | 2 | O | 1.04 | 32 | 49 |
| | 3 | O | 1.19 | 38 | 42 |
| | 4▽ | O | 1.89 | 38 | 60 |
| | 5▽ | O | 2.00 | 38 | 55 |
| 85 | 1 | O | 0.64 | 24 | 34 |
| | 2 | O | 1.20 | 28 | 49 |
| | 3 | O | 1.40 | 28 | 42 |
| | 4▽ | O | 1.98 | 28 | 53 |
| | 5▽ | O | 2.20 | 32 | 55 |
| 90 | 1 | O | 0.88 | 28 | 34 |
| | 2 | O | 1.47 | 32 | 49 |
| | 3 | O | 1.62 | 38 | 42 |
| | 4▽ | O | 2.22 | 42 | 53 |
| | 5▽ | O | 2.51 | 42 | 67 |
| 95 | 1 | O | 0.76 | 28 | 34 |
| | 2 | O | 1.57 | 28 | 49 |
| | 3 | O | 1.89 | 28 | 42 |
| | 4▽ | O | 2.47 | 32 | 53 |
| | 5▽ | O | 2.75 | 35 | 67 |
| 100 | 1 | O | 0.84 | 28 | 34 |
| | 2 | O | 1.36 | 32 | 49 |
| | 3 | O | 1.98 | 38 | 52 |
| | 4▽ | O | 2.72 | 42 | 53 |
| | 5▽ | O | 3.10 | 42 | 60 |
| 106 | 1 | O | 0.88 | 28 | 34 |
| | 2 | O | 1.65 | 28 | 49 |
| | 3 | O | 2.20 | 32 | 42 |
| | 4▽ | O | 3.24 | 32 | 53 |
| | 5▽ | O | 3.85 | 35 | 60 |
| 112 | 1 | O | 1.09 | 28 | 34 |
| | 2 | O | 1.75 | 38 | 49 |
| | 3 | O | 2.38 | 38 | 42 |
| | 4▽ | O | 3.37 | 42 | 53 |
| | 5▽ | O | 3.95 | 42 | 60 |
| 118 | 1 | O | 1.10 | 32 | 34 |
| | 2 | O | 1.80 | 38 | 49 |
| | 3 | O | 2.42 | 42 | 42 |
| | 4▽ | O | 3.42 | 42 | 53 |
| | 5▽ | O | 4.10 | 48 | 65 |
| 125 | 1 | O | 1.38 | 32 | 34 |
| | 2 | O | 1.90 | 38 | 49 |
| | 3 | O | 2.55 | 42 | 42 |
| | 4▽ | O | 3.49 | 42 | 53 |
| | 5▽ | O | 4.40 | 48 | 65 |
| 132 | 1 | O | 1.45 | 32 | 34 |
| | 2 | O | 2.20 | 38 | 49 |
| | 3 | O | 2.58 | 42 | 42 |
| | 4▽ | O | 3.58 | 42 | 53 |
| | 5▽ | O | 4.75 | 48 | 65 |
| 140 | 1 | O | 1.52 | 32 | 34 |
| | 2 | O | 2.33 | 38 | 49 |
| | 3 | O | 2.63 | 42 | 42 |
| | 4▽ | O | 3.65 | 42 | 53 |
| | 5▽ | O | 4.95 | 48 | 65 |
| 150 | 1 | x | 1.60 | 38 | 36 |
| | 2 | x | 2.59 | 38 | 49 |
| | 3 | O | 2.95 | 42 | 42 |
| | 4▽ | O | 4.04 | 42 | 53 |
| | 5▽ | O | 5.15 | 48 | 65 |
| 160 | 1 | x | 1.75 | 38 | 36 |
| | 2 | x | 2.40 | 38 | 49 |
| | 3 | x | 2.80 | 42 | 42 |
| | 4▽ | O | 3.62 | 48 | 60 |
| | 5▽ | O | 5.45 | 48 | 70 |
| 170 | 1 | x | 2.00 | 35 | 36 |
| | 2 | x | 2.90 | 35 | 49 |
| | 3 | x | 3.20 | 35 | 42 |
| | 4▽ | x | 4.20 | 35 | 60 |
| | 5▽ | x | 5.80 | 38 | 70 |

▲ for Section 13 only

▽ $d_d$ + 4 mm

| No. of grooves z | 1 | 2 | 3 | 4 | 5 |
|---|---|---|---|---|---|
| Face width $b_2$ (mm) | 20 | 35 | 50 | 65 | 80 |

● Solid pulley
O Plate pulley (with or without lightening holes)
X Spoked pulley
Hub position: flush one side
Material: GG 20 – DIN 1691

optibelt
Power Transmission

# Standard Range

## optibelt KS V-Grooved Pulleys for Cylindrical Bore – Grooves according to DIN 2211

### Section SPA / 13

| Datum diameter $d_d$ (mm) | No. of grooves | Type | Weight (≈ kg) | Finished bore $d_{max}$ (mm) | Distance through hub l (mm) |
|---|---|---|---|---|---|
| 180 | 1 | x | 2.02 | 38 | 36 |
| | 2 | x | 3.15 | 42 | 49 |
| | 3 | x | 3.60 | 42 | 42 |
| | 4▽ | x | 4.65 | 48 | 60 |
| | 5▽ | x | 6.13 | 48 | 70 |
| 190 | 1 | x | 2.02 | 38 | 36 |
| | 2 | x | 3.20 | 42 | 49 |
| | 3 | x | 4.00 | 42 | 42 |
| | 4▽ | x | 5.24 | 48 | 60 |
| | 5▽ | x | 6.31 | 48 | 70 |
| 200 | 1 | x | 2.40 | 38 | 36 |
| | 2 | x | 2.85 | 42 | 49 |
| | 3 | x | 4.21 | 48 | 42 |
| | 4▽ | x | 4.95 | 55 | 60 |
| | 5▽ | x | 6.45 | 60 | 70 |
| 212 | 1 | x | 2.70 | 40 | 36 |
| | 2 | x | 3.40 | 42 | 49 |
| | 3 | x | 4.40 | 42 | 42 |
| | 4▽ | x | 5.68 | 42 | 60 |
| | 5▽ | x | 6.85 | 42 | 70 |
| 225 | 1 | x | 2.75 | 40 | 36 |
| | 2 | x | 3.87 | 42 | 49 |
| | 3 | x | 4.60 | 42 | 42 |
| | 4▽ | x | 6.50 | 42 | 60 |
| | 5▽ | x | 7.25 | 42 | 70 |
| 236 | 1 | x | 3.30 | 38 | 36 |
| | 2 | x | 4.10 | 42 | 49 |
| | 3 | x | 4.90 | 48 | 42 |
| | 4▽ | x | 6.20 | 55 | 60 |
| | 5▽ | x | 7.50 | 55 | 70 |
| 250 | 1 | x | 3.40 | 42 | 36 |
| | 2 | x | 4.32 | 48 | 49 |
| | 3 | x | 5.30 | 48 | 42 |
| | 4▽ | x | 7.00 | 55 | 60 |
| | 5▽ | x | 7.85 | 60 | 70 |
| 280 | 1 | x | 3.90 | 42 | 44 |
| | 2 | x | 5.35 | 48 | 53 |
| | 3 | x | 6.50 | 48 | 47 |
| | 4▽ | x | 8.52 | 55 | 60 |
| | 5▽ | x | 9.90 | 60 | 70 |
| 300 | 1 | x | 4.25 | 48 | 44 |
| | 2 | x | 5.90 | 48 | 53 |
| | 3 | x | 7.50 | 55 | 47 |
| | 4▽ | x | 9.82 | 55 | 60 |
| | 5▽ | x | 11.30 | 60 | 70 |

▽ $d_d$ + 4 mm

| Datum diameter $d_d$ (mm) | No. of grooves | Type | Weight (≈ kg) | Finished bore $d_{max}$ (mm) | Distance through hub l (mm) |
|---|---|---|---|---|---|
| 315 | 1 | x | 4.78 | 48 | 44 |
| | 2 | x | 6.60 | 48 | 53 |
| | 3 | x | 8.75 | 55 | 47 |
| | 4▽ | x | 11.80 | 55 | 60 |
| | 5▽ | x | 12.50 | 60 | 70 |
| 355 | 1 | x | 5.50 | 48 | 44 |
| | 2 | x | 7.70 | 55 | 53 |
| | 3 | x | 9.55 | 55 | 47 |
| | 4▽ | x | 11.80 | 55 | 60 |
| | 5▽ | x | 12.85 | 60 | 70 |
| 400 | 1▽ | x | 6.85 | 50 | 50 |
| | 2▽ | x | 8.80 | 55 | 53 |
| | 3▽ | x | 10.95 | 60 | 47 |
| | 4▽ | x | 12.40 | 60 | 67 |
| | 5▽ | x | 15.90 | 60 | 82 |
| 450 | 1▽ | x | 7.50 | 55 | 50 |
| | 2▽ | x | 9.40 | 55 | 53 |
| | 3▽ | x | 12.15 | 60 | 47 |
| | 4▽ | x | 14.20 | 65 | 67 |
| | 5▽ | x | 18.30 | 65 | 82 |
| 500 | 1▽ | x | 10.50 | 55 | 50 |
| | 2▽ | x | 10.70 | 55 | 55 |
| | 3▽ | x | 13.45 | 60 | 60 |
| | 4▽ | x | 16.25 | 65 | 67 |
| | 5▽ | x | 22.80 | 65 | 82 |
| 560 | 1▽ | x | 14.00 | 55 | 60 |
| | 2▽ | x | 13.10 | 55 | 60 |
| | 3▽ | x | 15.60 | 60 | 74 |
| | 4▽ | x | 19.40 | 65 | 67 |
| | 5▽ | x | 24.50 | 65 | 82 |

▽ $d_d$ + 4 mm

| No. of grooves z | 1 | 2 | 3 | 4 | 5 |
|---|---|---|---|---|---|
| Face width $b_2$ (mm) | 20 | 35 | 50 | 67 | 82 |

● Solid pulley
O Plate pulley (with or without lightening holes)
X Spoked pulley
Hub position: flush one side
Material: GG 20 – DIN 1691

# Standard Range

## optibelt KS V-Grooved Pulleys for Cylindrical Bore – Grooves according to DIN 2211

### Section SPB / 17

| Datum diameter $d_d$ (mm) | No. of grooves | Type | Weight (≈ kg) | Finished bore $d_{max}$ (mm) | Distance through hub l (mm) |
|---|---|---|---|---|---|
| 56▲ | 1 | O | 0.61 | 20 | 41 |
| | 2 | O | 1.00 | 20 | 60 |
| | 3 | O | 1.00 | 22 | 62 |
| 63▲ | 1 | O | 0.76 | 20 | 41 |
| | 2 | O | 1.20 | 20 | 60 |
| | 3 | O | 1.20 | 22 | 62 |
| 71▲ | 1 | O | 0.79 | 22 | 41 |
| | 2 | O | 1.31 | 22 | 60 |
| | 3 | O | 1.60 | 22 | 55 |
| 75▲ | 1 | O | 0.82 | 25 | 41 |
| | 2 | O | 1.42 | 25 | 60 |
| | 3 | O | 1.85 | 25 | 62 |
| 80▲ | 1 | O | 1.03 | 28 | 41 |
| | 2 | O | 1.65 | 28 | 60 |
| | 3 | O | 2.05 | 28 | 55 |
| | 4▽ | O | 2.40 | 28 | 70 |
| | 5▽ | O | 2.73 | 28 | 80 |
| 85▲ | 1 | O | 1.10 | 30 | 41 |
| | 2 | O | 1.70 | 30 | 60 |
| | 3 | O | 2.15 | 30 | 55 |
| | 4▽ | O | 2.70 | 30 | 70 |
| | 5▽ | O | 3.00 | 30 | 75 |
| 90▲ | 1 | O | 1.17 | 32 | 41 |
| | 2 | O | 1.80 | 38 | 60 |
| | 3 | O | 2.30 | 38 | 55 |
| | 4▽ | O | 3.05 | 38 | 70 |
| | 5▽ | O | 3.30 | 38 | 75 |
| 95▲ | 1 | O | 1.25 | 35 | 41 |
| | 2 | O | 2.00 | 38 | 60 |
| | 3 | O | 2.50 | 38 | 67 |
| | 4▽ | O | 2.90 | 38 | 70 |
| | 5▽ | O | 3.60 | 38 | 75 |
| 100▲ | 1 | O | 1.32 | 32 | 41 |
| | 2 | O | 2.11 | 38 | 60 |
| | 3 | O | 2.85 | 38 | 55 |
| | 4▽ | O | 3.81 | 38 | 70 |
| | 5▽ | O | 4.45 | 38 | 75 |
| | 6▽ | O | 5.20 | 38 | 124 |
| 106▲ | 1 | O | 1.45 | 28 | 41 |
| | 2 | O | 2.00 | 28 | 60 |
| | 3 | O | 3.00 | 30 | 55 |
| | 4▽ | O | 4.30 | 30 | 70 |
| | 5▽ | O | 5.10 | 32 | 75 |
| | 6▽ | O | 6.00 | 32 | 124 |
| 112▲ | 1 | O | 1.53 | 32 | 41 |
| | 2 | O | 2.35 | 38 | 60 |
| | 3 | O | 3.10 | 38 | 55 |
| | 4▽ | O | 4.75 | 42 | 67 |
| | 5▽ | O | 5.61 | 42 | 75 |
| | 6▽ | O | 6.15 | 42 | 85 |
| 118▲ | 1 | O | 1.57 | 32 | 41 |
| | 2 | O | 2.43 | 38 | 60 |
| | 3 | O | 3.20 | 42 | 55 |
| | 4▽ | O | 6.20 | 42 | 70 |
| | 5▽ | O | 7.20 | 42 | 75 |
| | 6▽ | O | 6.60 | 42 | 85 |
| 125▲ | 1 | O | 1.66 | 32 | 41 |
| | 2 | O | 2.55 | 38 | 60 |
| | 3 | O | 3.28 | 42 | 55 |
| | 4▽ | O | 4.74 | 42 | 70 |
| | 5▽ | O | 8.60 | 42 | 75 |
| | 6▽ | O | 8.00 | 48 | 85 |
| 132▲ | 1 | O | 1.88 | 30 | 41 |
| | 2 | O | 2.63 | 30 | 60 |
| | 3 | O | 3.49 | 42 | 55 |
| | 4▽ | O | 6.30 | 42 | 70 |
| | 5▽ | O | 9.40 | 42 | 75 |
| | 6▽ | O | 8.50 | 42 | 85 |
| 140 | 1 | O | 2.10 | 32 | 41 |
| | 2 | O | 2.90 | 38 | 60 |
| | 3 | O | 3.90 | 42 | 55 |
| | 4▽ | O | 6.92 | 42 | 70 |
| | 5▽ | O | 7.58 | 48 | 75 |
| | 6▽ | O | 11.40 | 48 | 85 |
| 150 | 1 | O | 2.43 | 32 | 43 |
| | 2 | O | 3.24 | 38 | 48 |
| | 3 | O | 4.28 | 42 | 60 |
| | 4▽ | O | 6.76 | 42 | 70 |
| | 5▽ | O | 8.43 | 48 | 75 |
| | 6▽ | O | 12.10 | 48 | 85 |
| 160 | 1 | x | 2.50 | 38 | 43 |
| | 2 | x | 3.32 | 42 | 48 |
| | 3 | x | 4.60 | 48 | 60 |
| | 4▽ | O | 7.01 | 48 | 70 |
| | 5▽ | O | 9.35 | 48 | 75 |
| | 6▽ | O | 12.85 | 55 | 85 |
| 170 | 1 | x | 2.85 | 42 | 43 |
| | 2 | x | 3.44 | 42 | 48 |
| | 3 | x | 4.89 | 42 | 60 |
| | 4▽ | O | 7.20 | 48 | 70 |
| | 5▽ | O | 8.90 | 48 | 75 |
| | 6▽ | O | 13.10 | 48 | 85 |

▲ for Section 17 only

▽ $d_d$ + 5,5 mm

| No. of grooves z | 1 | 2 | 3 | 4 | 5 | 6 |
|---|---|---|---|---|---|---|
| Face width $b_2$ (mm) | 25 | 44 | 63 | 86 | 105 | 124 |

● Solid pulley
O Plate pulley (with or without lightening holes)
X Spoked pulley
Hub position: flush one side
Material: GG 20 – DIN 1691

optibelt
Power Transmission

# Standard Range

## optibelt KS V-Grooved Pulleys for Cylindrical Bore – Grooves according to DIN 2211

### Section SPB / 17

| Datum diameter $d_d$ (mm) | No. of grooves | Type | Weight (≈ kg) | Finished bore $d_{max}$ (mm) | Distance through hub l (mm) |
|---|---|---|---|---|---|
| 180 | 1 | x | 3.10 | 38 | 43 |
| | 2 | x | 3.90 | 42 | 48 |
| | 3 | x | 5.28 | 48 | 60 |
| | 4▽ | x | 7.42 | 48 | 70 |
| | 5▽ | O | 9.05 | 55 | 75 |
| | 6▽ | O | 10.80 | 60 | 85 |
| 190 | 1 | x | 3.19 | 42 | 43 |
| | 2 | x | 4.22 | 42 | 48 |
| | 3 | x | 5.49 | 42 | 60 |
| | 4▽ | x | 7.69 | 48 | 70 |
| | 5▽ | O | 9.22 | 50 | 75 |
| | 6▽ | O | 11.95 | 55 | 85 |
| 200 | 1 | x | 3.40 | 38 | 43 |
| | 2 | x | 4.45 | 42 | 48 |
| | 3 | x | 5.85 | 48 | 60 |
| | 4▽ | x | 7.98 | 50 | 60 |
| | 5▽ | O | 9.50 | 55 | 80 |
| | 6▽ | O | 12.20 | 60 | 90 |
| 212 | 1 | x | 3.75 | 42 | 43 |
| | 2 | x | 4.66 | 42 | 48 |
| | 3 | x | 6.15 | 48 | 60 |
| | 4▽ | x | 7.70 | 50 | 70 |
| | 5▽ | x | 10.30 | 50 | 80 |
| | 6▽ | O | 13.51 | 55 | 90 |
| 225 | 1 | x | 4.00 | 42 | 43 |
| | 2 | x | 5.40 | 42 | 48 |
| | 3 | x | 6.90 | 48 | 60 |
| | 4▽ | x | 8.64 | 55 | 70 |
| | 5▽ | O | 11.72 | 50 | 90 |
| | 6▽ | O | 14.75 | 55 | 90 |
| 250 | 1 | x | 4.20 | 42 | 43 |
| | 2 | x | 6.10 | 48 | 55 |
| | 3 | x | 8.60 | 55 | 60 |
| | 4▽ | x | 9.70 | 60 | 70 |
| | 5▽ | x | 13.20 | 65 | 80 |
| | 6▽ | x | 17.00 | 65 | 90 |
| 280 | 1 | x | 5.70 | 48 | 49 |
| | 2 | x | 7.04 | 48 | 55 |
| | 3 | x | 9.67 | 55 | 60 |
| | 4▽ | x | 11.52 | 60 | 70 |
| | 5▽ | x | 15.50 | 65 | 80 |
| | 6▽ | x | 18.00 | 65 | 90 |
| 300 | 1 | x | 5.90 | 48 | 49 |
| | 2 | x | 7.50 | 48 | 55 |
| | 3 | x | 10.50 | 55 | 67 |
| | 4▽ | x | 12.40 | 60 | 80 |
| | 5▽ | x | 15.40 | 65 | 80 |
| | 6▽ | x | 18.25 | 70 | 90 |
| 315 | 1 | x | 6.40 | 48 | 49 |
| | 2 | x | 8.22 | 55 | 55 |
| | 3 | x | 12.90 | 55 | 67 |
| | 4▽ | x | 13.00 | 60 | 80 |
| | 5▽ | x | 17.60 | 65 | 80 |
| | 6▽ | x | 20.60 | 75 | 90 |
| 355 | 1 | x | 7.00 | 48 | 49 |
| | 2 | x | 9.70 | 55 | 55 |
| | 3 | x | 13.40 | 55 | 67 |
| | 4▽ | x | 18.25 | 60 | 80 |
| | 5▽ | x | 18.75 | 65 | 75 |
| | 6▽ | x | 19.75 | 75 | 90 |
| 400 | 1▽ | x | 8.46 | 50 | 49 |
| | 2▽ | x | 10.00 | 55 | 55 |
| | 3▽ | x | 14.30 | 60 | 67 |
| | 4▽ | x | 18.50 | 65 | 80 |
| | 5▽ | x | 22.50 | 70 | 85 |
| | 6▽ | x | 28.00 | 75 | 90 |
| 450 | 1▽ | x | 9.86 | 50 | 55 |
| | 2▽ | x | 10.87 | 55 | 55 |
| | 3▽ | x | 15.05 | 60 | 67 |
| | 4▽ | x | 20.50 | 65 | 80 |
| | 5▽ | x | 26.00 | 70 | 80 |
| | 6▽ | x | 28.90 | 75 | 90 |
| 500 | 1▽ | x | 10.70 | 50 | 55 |
| | 2▽ | x | 13.70 | 60 | 59 |
| | 3▽ | x | 15.20 | 65 | 67 |
| | 4▽ | x | 21.30 | 70 | 80 |
| | 5▽ | x | 30.00 | 75 | 80 |
| | 6▽ | x | 33.80 | 80 | 90 |
| 560 | 2▽ | x | 15.00 | 60 | 55 |
| | 3▽ | x | 24.20 | 65 | 67 |
| | 4▽ | x | 26.20 | 70 | 80 |
| | 5▽ | x | 34.40 | 75 | 80 |
| | 6▽ | x | 39.00 | 80 | 90 |
| 630 | 2▽ | x | 20.20 | 60 | 80 |
| | 3▽ | x | 27.00 | 65 | 80 |
| | 4▽ | x | 30.80 | 75 | 86 |
| | 5▽ | x | 37.20 | 80 | 90 |
| | 6▽ | x | 44.00 | 90 | 100 |

▽ $d_d$ + 5,5 mm

| No. of grooves z | 1 | 2 | 3 | 4 | 5 | 6 |
|---|---|---|---|---|---|---|
| Face width $b_2$ (mm) | 25 | 44 | 63 | 86 | 105 | 124 |

● Solid pulley
O Plate pulley (with or without lightening holes)
X Spoked pulley
Hub position: flush one side
Material: GG 20 – DIN 1691

optibelt
Power Transmission

# Standard Range

## optibelt KS V-Grooved Pulleys for Cylindrical Bore – Grooves according to DIN 2211

### Section SPC/22

| Datum diameter $d_d$ (mm) | No. of grooves | Type | Weight (≈ kg) | Finished bore $d_{max}$ (mm) | Distance through hub l (mm) |
|---|---|---|---|---|---|
| 180 | 1 | O | 4.20 | 40 | 54 |
| | 2 | O | 7.20 | 50 | 64 |
| | 3 | O | 10.40 | 55 | 90 |
| | 4 | O | 10.50 | 55 | 95 |
| | 5 | O | 18.00 | 60 | 100 |
| | 6 | O | 23.70 | 65 | 115 |
| 200 | 1 | O | 4.80 | 40 | 54 |
| | 2 | O | 7.80 | 50 | 64 |
| | 3 | O | 10.60 | 55 | 90 |
| | 4 | O | 11.20 | 60 | 95 |
| | 5 | O | 15.40 | 65 | 100 |
| | 6 | O | 27.00 | 70 | 125 |
| 225 | 1 | x | 5.50 | 48 | 54 |
| | 2 | x | 7.80 | 52 | 64 |
| | 3 | x | 10.60 | 52 | 90 |
| | 4 | x | 13.10 | 55 | 95 |
| | 5 | x | 16.70 | 60 | 100 |
| | 6 | x | 35.00 | 60 | 115 |
| 250 | 1 | x | 7.30 | 52 | 54 |
| | 2 | x | 8.80 | 52 | 64 |
| | 3 | x | 11.10 | 65 | 90 |
| | 4 | x | 15.30 | 70 | 95 |
| | 5 | x | 19.00 | 75 | 100 |
| | 6 | x | 23.70 | 60 | 115 |
| 280 | 1 | x | 8.70 | 52 | 54 |
| | 2 | x | 10.90 | 55 | 64 |
| | 3 | x | 15.60 | 70 | 90 |
| | 4 | x | 17.50 | 75 | 95 |
| | 5 | x | 20.50 | 75 | 100 |
| 315 | 1 | x | 9.10 | 52 | 54 |
| | 2 | x | 13.00 | 55 | 74 |
| | 3 | x | 17.10 | 70 | 90 |
| | 4 | x | 20.00 | 75 | 95 |
| | 5 | x | 24.70 | 80 | 100 |
| | 6 | x | 31.20 | 85 | 115 |
| 335 | 2 | x | 14.00 | 55 | 74 |
| | 3 | x | 18.30 | 55 | 90 |
| | 4 | x | 22.40 | 60 | 95 |
| | 5 | x | 28.30 | 65 | 100 |
| | 6 | x | 34.40 | 75 | 115 |
| 355 | 2 | x | 15.20 | 60 | 74 |
| | 3 | x | 19.20 | 70 | 90 |
| | 4 | x | 25.80 | 70 | 95 |
| | 5 | x | 32.00 | 75 | 100 |
| | 6 | x | 36.20 | 75 | 115 |
| 400 | 3 | x | 20.60 | 70 | 90 |
| | 4 | x | 28.00 | 70 | 105 |
| | 5 | x | 32.00 | 75 | 100 |
| 450 | 2 | x | 21.10 | 70 | 80 |
| | 3 | x | 26.30 | 75 | 90 |
| | 4 | x | 31.10 | 75 | 105 |
| | 5 | x | 42.20 | 80 | 110 |
| | 6 | x | 48.50 | 80 | 120 |
| 500 | 3 | x | 28.40 | 75 | 90 |
| | 4 | x | 34.10 | 75 | 105 |
| | 5 | x | 48.20 | 80 | 110 |
| | 6 | x | 52.50 | 80 | 120 |
| 560 | 3 | x | 31.10 | 75 | 90 |
| | 4 | x | 39.00 | 75 | 105 |
| | 5 | x | 54.10 | 85 | 110 |
| | 6 | x | 61.50 | 85 | 120 |
| 630 | 3 | x | 38.50 | 80 | 90 |
| | 4 | x | 48.10 | 80 | 105 |
| | 5 | x | 62.20 | 85 | 110 |
| | 6 | x | 73.20 | 85 | 120 |

| No. of grooves z | 1 | 2 | 3 | 4 | 5 | 6 |
|---|---|---|---|---|---|---|
| Face width $b_2$ (mm) | 38 | 64 | 90 | 116 | 142 | 168 |

● Solid pulley
O Plate pulley (with or without lightening holes)
X Spoked pulley
Hub position: flush one side
Material: GG 20 – DIN 1691

# Standard Range

## optibelt *RE* Variable Speed Pulleys

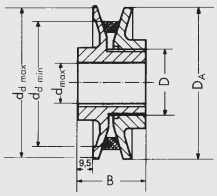


### Plain bored variable datum diameters pulleys

Material: AL

| Designation | $D_A$ (mm) | D (mm) | Finished bore $d_{max}$ (mm) | B (mm) | Section | $d_{d\,min}$ (mm) | $d_{d\,max}$ (mm) | Variation factor | Weight (≈ kg) |
|---|---|---|---|---|---|---|---|---|---|
| R 083-1 | 83 | 40 | 26 | 48 | SPZ<br>Z/10 | 63<br>57 | 79<br>77 | 1.25<br>1.35 | 0.90 |
| R 093-1 | 93 | 45 | 28 | 48 | SPZ<br>SPA<br>Z/10<br>A/13 | 67<br>66<br>61<br>60 | 89<br>87<br>87<br>85 | 1.33<br>1.32<br>1.43<br>1.42 | 1.03 |
| R 108-1 | 108 | 50 | 28 | 48 | SPZ<br>SPA<br>Z/10<br>A/13 | 79<br>81<br>73<br>75 | 94<br>102<br>93<br>100 | 1.19<br>1.26<br>1.27<br>1.33 | 1.65 |
| R 121-1 | 121 | 55 | 28 | 48 | SPZ<br>SPA<br>Z/10<br>A/13 | 92<br>94<br>86<br>88 | 107<br>115<br>106<br>113 | 1.16<br>1.22<br>1.23<br>1.28 | 1.75 |
| R 138-1 | 138 | 55 | 38 | 48 | SPZ<br>SPA<br>SPB<br>Z/10<br>A/13<br>B/17 | 109<br>111<br>116<br>103<br>105<br>109 | 124<br>132<br>131<br>123<br>130<br>128 | 1.14<br>1.19<br>1.13<br>1.19<br>1.24<br>1.17 | 2.60 |
| R 160-1 | 160 | 80 | 52 | 48 | SPZ<br>SPA<br>SPB<br>Z/10<br>A/13<br>B/17 | 119<br>121<br>126<br>113<br>115<br>119 | 134<br>143<br>153<br>133<br>141<br>150 | 1.13<br>1.18<br>1.21<br>1.18<br>1.23<br>1.26 | 4.50 |
| R 180-1 | 180 | 80 | 52 | 48 | SPA<br>SPB<br>A/13<br>B/17 | 141<br>146<br>135<br>139 | 163<br>173<br>161<br>170 | 1.16<br>1.18<br>1.19<br>1.22 | 5.40 |



Al = Aluminium

Rights to technical modification reserved.

# Standard Range

## optibelt *RE* Variable Speed Pulleys

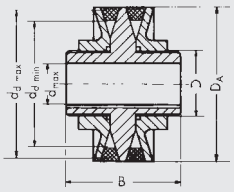


### Plain bored variable datum diameters pulleys

Material: Al

| Designation | $D_A$ (mm) | D (mm) | Finished bore $d_{max}$ (mm) | B (mm) | Section | $d_{d\,min}$ (mm) | $d_{d\,max}$ (mm) | Variation factor | Weight (≈ kg) |
|---|---|---|---|---|---|---|---|---|---|
| R 083-2 | 83 | 40 | 26 | 76 | SPZ<br>Z/10 | 63<br>57 | 79<br>77 | 1.25<br>1.35 | 1.50 |
| R 093-2 | 93 | 45 | 28 | 76 | SPZ<br>SPA<br>Z/10<br>A/13 | 67<br>66<br>61<br>60 | 89<br>87<br>87<br>85 | 1.33<br>1.32<br>1.43<br>1.42 | 1.75 |
| R 108-2 | 108 | 50 | 28 | 76 | SPZ<br>SPA<br>Z/10<br>A/13 | 79<br>81<br>73<br>75 | 94<br>102<br>93<br>100 | 1.19<br>1.26<br>1.27<br>1.33 | 2.15 |
| R 121-2 | 121 | 55 | 28 | 76 | SPZ<br>SPA<br>Z/10<br>A/13 | 92<br>94<br>86<br>88 | 107<br>115<br>106<br>113 | 1.16<br>1.22<br>1.23<br>1.28 | 2.70 |
| R 138-2 | 138 | 55 | 38 | 76 | SPZ<br>SPA<br>SPB<br>Z/10<br>A/13<br>B/17 | 109<br>111<br>116<br>103<br>105<br>109 | 124<br>132<br>131<br>123<br>130<br>128 | 1.14<br>1.19<br>1.13<br>1.19<br>1.24<br>1.17 | 4.50 |
| R 160-2 | 160 | 80 | 52 | 90 | SPZ<br>SPA<br>SPB<br>Z/10<br>A/13<br>B/17 | 119<br>121<br>126<br>113<br>115<br>119 | 134<br>143<br>153<br>133<br>141<br>150 | 1.13<br>1.18<br>1.21<br>1.18<br>1.23<br>1.26 | 7.50 |
| R 180-2 | 180 | 80 | 52 | 90 | SPA<br>SPB<br>A/13<br>B/17 | 141<br>146<br>135<br>139 | 163<br>173<br>161<br>170 | 1.16<br>1.18<br>1.19<br>1.22 | 9.20 |

Al = Aluminium

Rights to technical modification reserved.

# Standard Range

## optibelt *RE* Variable Speed Pulleys

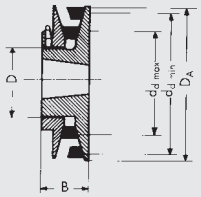


### Variable datum diameters pulleys for taper bushes

Material: GG

| Designation | $D_A$ (mm) | D (mm) | Finished bore $d_{max}$ (mm) | B (mm) | Section | $d_{d\,min}$ (mm) | $d_{d\,max}$ (mm) | Variation factor | Weight without bush (≈ kg) | Taper bush |
|---|---|---|---|---|---|---|---|---|---|---|
| TB-R 092-1 | 92 | 46 | 25 | 31 | SPZ<br>Z/10 | 60<br>55 | 89<br>88 | 1.48<br>1.60 | 0.85 | 1008 |
| TB-R 108-1 | 108 | 50 | 28 | 35 | SPZ<br>SPA<br>Z/10<br>A/13<br>B/17 | 75<br>76<br>68<br>70<br>87 | 93<br>102<br>92<br>100<br>97 | 1.24<br>1.34<br>1.35<br>1.43<br>1.11 | 1.20 | 1108 |
| TB-R 120-1 | 120 | 55 | 28 | 35 | SPZ<br>SPA<br>Z/10<br>A/13<br>B/17 | 87<br>88<br>80<br>82<br>98 | 105<br>114<br>104<br>112<br>108 | 1.20<br>1.29<br>1.30<br>1.36<br>1.10 | 1.50 | 1108 |
| TB-R 138-1 | 138 | 65 | 32 | 38 | SPZ<br>SPA<br>Z/10<br>A/13<br>B/17 | 105<br>106<br>98<br>100<br>116 | 123<br>132<br>122<br>130<br>126 | 1.17<br>1.24<br>1.24<br>1.30<br>1.09 | 2.20 | 1215 |
| TB-R 159-1 | 159 | 75 | 42 | 39 | SPZ<br>SPA<br>Z/10<br>A/13<br>B/17 | 126<br>128<br>122<br>128<br>125 | 144<br>154<br>152<br>152<br>148 | 1.14<br>1.20<br>1.24<br>1.18<br>1.18 | 3.50 | 1615 |
| TB-R 180-1 | 180 | 75 | 42 | 45 | SPZ<br>SPA<br>SPB<br>Z/10<br>A/13<br>B/17 | 133<br>134<br>137<br>128<br>128<br>132 | 151<br>160<br>173<br>151<br>158<br>170 | 1.14<br>1.19<br>1.26<br>1.17<br>1.23<br>1.29 | 4.20 | 1615 |

| Taper bush | 1008 | 1108 | 1215 | 1615 |
|---|---|---|---|---|
| bore $d_2$ (mm) from ... to ... | 10-25 | 10-28 | 11-32 | 14-42 |

GG = cast iron

Rights to technical modification reserved.

Bore diameter $d_2$ see page 65

optibelt

Power Transmission

# Standard Range

## optibelt *TB* Taper Bushes

### Taper bushes with metrical bore, grooves according to DIN 6885 Part 1

| | Taper bush | | | | | | | | | | | | | | | |
|---|---|---|---|---|---|---|---|---|---|---|---|---|---|---|---|---|
| | 1008 | 1108 | 1210 | 1215 | 1310 | 1610 | 1615 | 2012 | 2517 | 3020 | 3030 | 3525 | 3535 | 4040 | 4545 | 5050 |
| Bore diameter $d_2$ **(mm)** | 10<br>11<br>12<br>14<br>16<br>18<br>19<br>20<br>22<br>24▲<br>25▲ | 10<br>11<br>12<br>14<br>16<br>18<br>19<br>20<br>22<br>24<br>25<br>28▲ | 11<br>12<br>14<br>16<br>18<br>19<br>20<br>22<br>24<br>25<br>28<br>30<br>32 | 11<br>12<br>14<br>16<br>18<br>19<br>20<br>22<br>24<br>25<br>28<br>30<br>32 | 14<br>16<br>18<br>19<br>20<br>22<br>24<br>25<br>28<br>30<br>32<br>35 | 14<br>16<br>18<br>19<br>20<br>22<br>24<br>25<br>28<br>30<br>32<br>35<br>38<br>40<br>42▲ | 14<br>16<br>18<br>19<br>20<br>22<br>24<br>25<br>28<br>30<br>32<br>35<br>38<br>40<br>42▲ | 14<br>16<br>18<br>19<br>20<br>22<br>24<br>25<br>28<br>30<br>32<br>35<br>38<br>40<br>42<br>45<br>48<br>50 | 16<br>18<br>19<br>20<br>22<br>24<br>25<br>28<br>30<br>32<br>35<br>38<br>40<br>42<br>45<br>48<br>50<br>55<br>60 | 25<br>28<br>30<br>32<br>35<br>38<br>40<br>42<br>45<br>48<br>50<br>55<br>60<br>65<br>70<br>75 | 35<br>38<br>40<br>42<br>45<br>48<br>50<br>55<br>60<br>65<br>70<br>75 | 35<br>38<br>40<br>42<br>45<br>48<br>50<br>55<br>60<br>65<br>70<br>75<br>80<br>85<br>90 | 35<br>38<br>40<br>42<br>45<br>48<br>50<br>55<br>60<br>65<br>70<br>75<br>80<br>85<br>90 | 40<br>42<br>45<br>48<br>50<br>55<br>60<br>65<br>70<br>75<br>80<br>85<br>90<br>95<br>100 | 55<br>60<br>65<br>70<br>75<br>80<br>85<br>90<br>95<br>100<br>105<br>110 | 70<br>75<br>80<br>85<br>90<br>95<br>100<br>105<br>110<br>115<br>120<br>125 |
| | | | | | | | | | | | | | | Material: GG 20 | | |
| C torque (Nm) | 5.7 | 5.7 | 20 | 20 | 20 | 20 | 20 | 31 | 49 | 92 | 92 | 115 | 115 | 172 | 195 | 275 |
| Bush length (mm) | 22.3 | 22.3 | 25.4 | 38.1 | 25.4 | 25.4 | 38.1 | 31.8 | 44.5 | 50.8 | 76.2 | 63.5 | 88.9 | 101.6 | 114.3 | 127.0 |
| Weight for $d_{2\,min}$ (≈ kg) | 0.12 | 0.16 | 0.28 | 0.39 | 0.32 | 0.41 | 0.60 | 0.75 | 1.06 | 2.50 | 3.75 | 3.90 | 5.13 | 7.68 | 12.70 | 15.17 |

▲ This is a flat-groove bore.

### Flat groove taper bushes

| Bore diameter $d_2$ (mm) | Groove width b (mm) | Groove depth $t_2$ (mm) | Bore diameter $d_2$ (mm) | Groove width b (mm) | Groove depth $t_2$ (mm) |
|---|---|---|---|---|---|
| 24 | 8 | 2.0 | 28 | 28 | 2.0 |
| 25 | 8 | 1.3 | 42 | 12 | 2.2 |

### Taper bushes with inch bore, grooves according to British Standard BS 46 Part 1

| | Taper bush | | | | | | | | | | | | | | | |
|---|---|---|---|---|---|---|---|---|---|---|---|---|---|---|---|---|
| | 1008 | 1108 | 1210 | 1215 | 1310 | 1610 | 1615 | 2012 | 2517 | 3020 | 3030 | 3525 | 3535 | 4040 | 4545 | 5050 |
| Bore diameter $d_2$ **(inch)** | 3/8*<br>1/2<br>5/8<br>3/4<br>7/8<br>1▲ | 3/8*<br>1/2<br>5/8<br>3/4<br>7/8<br>1<br>1 1/8▲* | 1/2<br>5/8<br>3/4<br>7/8<br>1<br>1 1/8<br>1 1/4 | 5/8*<br>3/4<br>7/8<br>1<br>1 1/8<br>1 1/4 | 1/2*<br>5/8*<br>3/4*<br>7/8*<br>1*<br>1 1/8<br>1 1/4<br>1 3/8 | 1/2<br>5/8<br>3/4<br>7/8<br>1<br>1 1/8<br>1 1/4<br>1 3/8<br>1 1/2<br>1 5/8 | 1/2<br>5/8<br>3/4<br>7/8*<br>1<br>1 1/8<br>1 1/4<br>1 3/8<br>1 1/2<br>1 5/8▲* | 5/8*<br>3/4<br>7/8<br>1<br>1 1/8<br>1 1/4<br>1 3/8<br>1 1/2<br>1 5/8<br>1 3/4<br>1 7/8<br>2 | 3/4<br>7/8<br>1<br>1 1/8<br>1 1/4<br>1 3/8<br>1 1/2<br>1 5/8<br>1 3/4<br>1 7/8<br>2<br>2 1/8<br>2 1/4<br>2 3/8<br>2 1/2 | 1 1/4<br>1 3/8<br>1 1/2<br>1 5/8<br>1 3/4*<br>1 7/8<br>2<br>2 1/8*<br>2 1/4<br>2 3/8<br>2 1/2<br>2 5/8<br>2 3/4<br>2 7/8<br>3 | 1 1/4<br>1 3/8<br>1 1/2<br>1 5/8<br>1 3/4*<br>1 7/8<br>2<br>2 1/8*<br>2 1/4<br>2 3/8<br>2 1/2<br>2 5/8*<br>2 3/4*<br>2 7/8<br>3 | 1 1/2<br>1 5/8<br>1 3/4<br>1 7/8<br>2<br>2 1/8<br>2 1/4<br>2 3/8<br>2 1/2<br>2 5/8<br>2 3/4<br>2 7/8<br>3<br>3 1/8<br>3 1/4<br>3 3/8<br>3 1/2▲ | 1 1/2<br>1 5/8<br>1 3/4<br>1 7/8<br>2<br>2 1/8<br>2 1/4<br>2 3/8<br>2 1/2<br>2 5/8<br>2 3/4<br>2 7/8<br>3<br>3 1/8<br>3 1/4<br>3 3/8<br>3 1/2▲ | 1 3/4*<br>1 7/8*<br>2*<br>2 1/8*<br>2 1/4*<br>2 3/8*<br>2 1/2*<br>2 5/8*<br>2 3/4*<br>2 7/8*<br>3*<br>3 1/8*<br>3 1/4*<br>3 3/8*<br>3 1/2*<br>3 3/4▲*<br>4▲* | 2 1/4*<br>2 3/8*<br>2 1/2*<br>2 3/4*<br>2 7/8*<br>3*<br>3 1/4*<br>3 3/8*<br>3 1/2*<br>3 3/4*<br>4*<br>4 1/4▲*<br>4 1/2▲* | 3*<br>3 1/4*<br>3 1/2*<br>3 3/4*<br>4*<br>4 1/4*<br>4 1/2*<br>4 3/4*<br>5▲* |
| | | | | | | | | | | | | | | Material: GG 20 | | |
| Starting torque (Nm) | 5.7 | 5.7 | 20 | 20 | 20 | 20 | 20 | 31 | 49 | 92 | 92 | 115 | 115 | 172 | 195 | 275 |
| Bush length (mm) | 22.3 | 22.3 | 25.4 | 38.1 | 25.4 | 25.4 | 38.1 | 31.8 | 44.5 | 50.8 | 76.2 | 63.5 | 88.9 | 101.6 | 114.3 | 127.0 |
| Weight for $d_{2\,min}$ (≈ kg) | 0.12 | 0.16 | 0.28 | 0.39 | 0.32 | 0.41 | 0.60 | 0.75 | 1.06 | 2.50 | 3.75 | 3.90 | 5.13 | 7.68 | 12.70 | 15.17 |

* Non stock item ▲ This is a flat-groove bore.

# Design Calculation

## Abbreviations used in Formulae

| | | | |
|---|---|---|---|
| $a$ | = | drive centre distance provisional | (mm) |
| $a_{nom}$ | = | drive centre distance calculated with a standard belt length | (mm) |
| $b_d$ | = | datum width | |
| $b_1$ | = | top width | |
| $c_1$ | = | arc of contact correction factor | |
| $c_2$ | = | service factor | |
| $c_3$ | = | belt length factor | |
| $c_4$ | = | number of idlers | |
| $d_{dg}$ | = | datum diameter of large pulley (selection to BS 3790/DIN 2211) | (mm) |
| $d_{dk}$ | = | datum diameter of small pulley (selection to BS 3790/DIN 2211) | (mm) |
| $d_{d1}$ | = | datum diameter of the driver pulley | (mm) |
| $d_{d2}$ | = | datum diameter of the driven pulley | (mm) |
| $E$ | = | belt deflection per 100 mm span length | (mm) |
| $E_a$ | = | belt deflection for a given span length | (mm) |
| $f$ | = | load used to set belt tension | (N) |
| $f_B$ | = | flex rate | ($sec^{-1}$) |
| $i$ | = | drive ratio | |
| $k$ | = | constant for calculating centrifugal force in belt set | |
| $L$ | = | span length | (mm) |
| $L_{iSt}$ | = | standard inside belt length | (mm) |
| $L_{ith}$ | = | calculated inside belt length | (mm) |
| $L_{dSt}$ | = | standard belt datum length | (mm) |
| $L_{dth}$ | = | calculated belt datum length | (mm) |
| $n_g$ | = | speed of the larger pulley | (rpm) |
| $n_k$ | = | speed of the smaller pulley | (rpm) |
| $n_1$ | = | speed of the driver pulley | (rpm) |
| $n_2$ | = | speed of the driven pulley | (rpm) |
| $P$ | = | motor or normal running power | (kW*) |
| $P_B$ | = | design power | (kW*) |
| $P_N$ | = | nominal power rating per belt | (kW*) |
| $S_a$ | = | minimum static shaft loading | (N) |
| $T$ | = | minimum static tension per belt | (N) |
| $v$ | = | belt speed | (m/s) |
| $x$ | = | minimum allowance above centre distance $a_{nom}$ for belt stretch and wear | (mm) |
| $y$ | = | minimum allowance below centre distance $a_{nom}$ for easy belt fitting | (mm) |
| $z$ | = | number of belts | |
| $\alpha$ | = | angle of belt drive = $90° - \frac{\beta}{2}$ | (degrees) |
| $\beta$ | = | arc of contact on small pulley | (degrees) |

* 1 kW = 1kNm/s

**The terms pitch diameter ($d_w$), pitch length ($L_w$) and pitch circumference ($U_w$) used previously have been changed to datum diameter ($d_d$), datum length ($L_d$) and datum circumference ($U_d$), in order to bring them into line with current Standard terminology.**

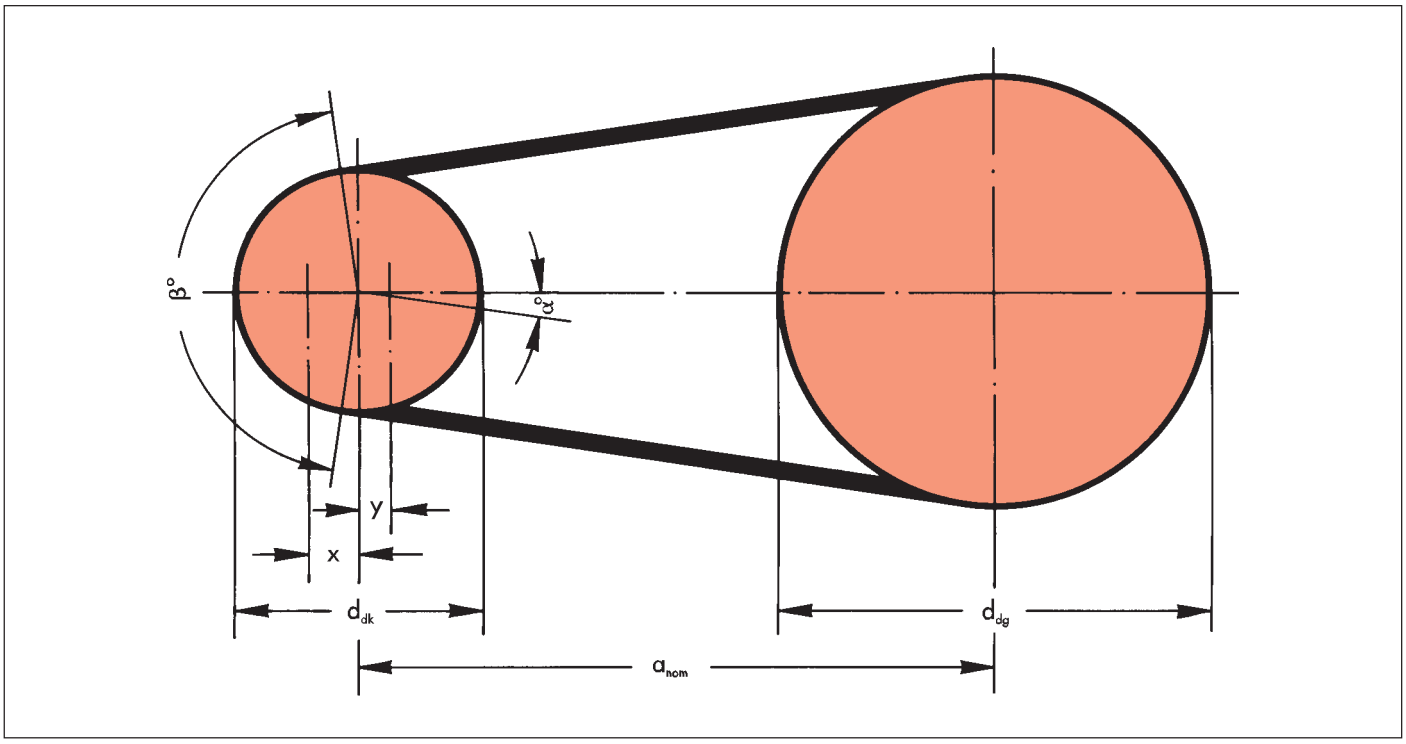

# Design Calculation

## Optibelt Nominal Power Rating $P_N$ – Arc of Contact Correction Factor $c_1$

The Optibelt nominal power ratings $P_N$ in Tables 25 to 48 are based upon an internationally recognised basic formula and a theoretical belt life of 25,000 hours ander ideal conditions. This formula contains material constants that take into account the quality of the raw materials used and make allowances for production methods. The special qualities of Optibelt V-belts made it possible for example to use other material constants than those given in DIN Standards. As a result, the nominal Optibelt power ratings $P_N$ significantly exceed the ratings given, for wedge belts in BS 3790 and DIN 7753 Part 2 and for classical V-belts in BS 3790 and DIN 2218, for the same theoretical belt life. The nominal power ratings $P_N$ are based on the smallest loaded pulley in the drive system. The belt power rating value $P_N$ is calculated taking into account

- the datum diameter of the smaller pulley $d_{dk}$
- the speed of the smaller pulley $n_k$
- the drive ratio i
- an assumed arc of contact at the smaller pulley of = 180°
- a reference belt length for the specific belt section.

In order to account for the true drive data, based on the arc of contact and the belt lengths employed, correction factors for the arc of contact $c_1$ and length $c_3$ have been introduced.

If required, drive calculations can be provided for any theoretical belt life.

Intermediate values for nominal power rating, arc of contact and length correction factors can be foand by linear interpolation.

The factor $c_1$ corrects the power rating $P_N$ when the arc of contact is smaller than 180°, as the $P_N$ value was calculated on the arc of contact β = 180° on the smaller pulley.

*Table 16*

| $\frac{d_{dg} - d_{dk}}{a_{nom}}$ | $\beta \approx$ | $c_1$ |
|---|---|---|
| 0 | 180° | 1.00 |
| 0.05 | 177° | 1.00 |
| 0.10 | 174° | 1.00 |
| 0.15 | 171° | 1.00 |
| 0.20 | 168° | 0.99 |
| 0.25 | 165° | 0.99 |
| 0.30 | 162° | 0.99 |
| 0.35 | 160° | 0.99 |
| 0.40 | 156° | 0.99 |
| 0.45 | 153° | 0.98 |
| 0.50 | 150° | 0.98 |
| 0.55 | 147° | 0.98 |
| 0.60 | 144° | 0.98 |
| 0.65 | 141° | 0.97 |
| 0.70 | 139° | 0.97 |
| 0.75 | 136° | 0.97 |
| 0.80 | 133° | 0.96 |
| 0.85 | 130° | 0.96 |
| 0.90 | 126° | 0.96 |
| 0.95 | 123° | 0.95 |
| 1.00 | 119° | 0.94 |
| 1.05 | 115° | 0.94 |
| 1.10 | 112° | 0.93 |
| 1.15 | 109° | 0.93 |
| 1.20 | 106° | 0.92 |
| 1.25 | 103° | 0.91 |
| 1.30 | 100° | 0.91 |
| 1.35 | 96° | 0.90 |
| 1.40 | 92° | 0.88 |
| 1.45 | 88° | 0.87 |
| 1.50 | 84° | 0.86 |
| 1.55 | 80° | 0.84 |
| 1.60 | 77° | 0.83 |

# Design Calculation

## Service Factor $c_2$

The service factor c2 takes account of the daily operating time and of the type of driver and driven machine. It applies exclusively to two-pulley drives. Other arrangements such as drives with tension and guide idlers have not been taken into consideration. Pages 114-116 provide the relevant basic design guidelines for drives with more than two pulleys.

Adverse operating conditions (e.g. aggressive dust, particularly high ambient temperatures or the effects of various media) **have not** been taken into account. As it is practically impossible to cover every conceivable combination of driver / driven machine / operating conditions in a summary that complies with the relevant standards, the service factors are **approximate values.**

**In special cases, e.g. increased starting torque (direct on-line starting of fans), on drives with frequent starts and stops, on systems subject to exceptional shock loads, or when significant masses are to be accelerated or braked, the service factor must be increased.**

**Empirical value:**

**With a starting torque > 1.8, this figure is to be divided by 1.5 in order to calculate the minimum service factor $c_2$. Example: Starting torque MA = 3.0; $c_2$ selected 2.0. Please consult our Applications Engineering Department for the solution of special problems.**

*Table 17*

| Types of Driven Machine | Types of Prime Movers: A.c. motors and three-phase squirrel cage motors with a normal starting torque (up to 1.8 times nominal torque), e.g. synchronous motors and single-phase motors with starting-aid phase, three-phase squirrel cage motors with direct start, star-delta connection or slip ring starters; direct-current shunt-wound motors, combustion engines and turbines n > 600 rpm | | | Types of Prime Movers: A.c. motors and three-phase squirrel cage motors with high starting torque (over 1.8 times nominal torque), e.g. single-phase motors with high starting torque; direct-current series-wound motors with series connection and compound; combustion engines and turbines n ≤ 600 rpm | | |
|---|---|---|---|---|---|---|
| | Service factor $c_2$ for daily operation time of (hours) | | | Service factor $c_2$ for daily operation time of (hours) | | |
| | up to 10 | over 10 below 16 | over 16 | up to 10 | over 10 below 16 | over 16 |
| **Light drives** Centrifugal pumps and compressors, belt conveyors (lightweight materials), fans and pumps up to 7.5 kW | 1.1 | 1.1 | 1.2 | 1.1 | 1.2 | 1.3 |
| **Medium drives** Plate cutters, presses, chain and belt conveyors (heavy materials), screen vibrators, generators and exciters, bakery machinery, machine tools (lathes and grinders), laundry machinery, printing machines, fans and pumps over 7.5 kW | 1.1 | 1.2 | 1.3 | 1.2 | 1.3 | 1.4 |
| **Heavy duty drives** Crushing plants, piston compressors, heavy-duty conveyors, directional throw conveyors, push conveyors (screw, plate belts, bucket and shovel conveyors), lifts, brick presses, textile machinery, paper machinery, piston pumps, dredger pumps, saw mills, hammer mills | 1.2 | 1.3 | 1.4 | 1.4 | 1.5 | 1.6 |
| **Very heavy duty drives** Heavy-duty mills, stone crushers, calenders, mixers, winches, cranes, dredgers, heavy duty wood working machinery | 1.3 | 1.4 | 1.5 | 1.5 | 1.6 | 1.8 |

# Design Calculation

## Length Factor $c_3$ for optibelt Wedge Belts and Kraftbands

The length factor $c_3$ takes into account the flex rate of the belt based on the reference length for the particular belt section.

This results in the following relationships:

| | |
|---|---|
| Belt length > reference length | $c_3 > 1.0$ |
| Belt length = reference length | $c_3 = 1.0$ |
| Belt length < reference length | $c_3 < 1.0$ |

*Table 18*

| Section SPZ, XPZ | | Section SPA, XPA | | Section SPB, XPB | | Section SPC, XPC | |
|---|---|---|---|---|---|---|---|
| Datum length (mm) | $c_3$ | Datum length (mm) | $c_3$ | Datum length (mm) | $c_3$ | Datum length (mm) | $c_3$ |
| 630 | **0.83** | 800 | **0.81** | 1250 | **0.83** | 2000 | **0.85** |
| 670 | **0.84** | 850 | **0.82** | 1320 | **0.84** | 2120 | **0.86** |
| 710 | **0.85** | 900 | **0.83** | 1400 | **0.85** | 2240 | **0.86** |
| 750 | **0.86** | 950 | **0.84** | 1500 | **0.86** | 2360 | **0.87** |
| 800 | **0.87** | 1000 | **0.85** | 1600 | **0.87** | 2500 | **0.88** |
| 850 | **0.88** | 1060 | **0.86** | 1700 | **0.88** | 2650 | **0.89** |
| 900 | **0 89** | 1120 | **0.86** | 1800 | **0.89** | 2800 | **0.90** |
| 950 | **0.90** | 1180 | **0.87** | 1900 | **0.90** | 3000 | **0.91** |
| 1000 | **0.91** | 1250 | **0.88** | 2000 | **0.91** | 3150 | **0.91** |
| 1060 | **0.92** | 1320 | **0.89** | 2120 | **0.92** | 3350 | **0.92** |
| 1120 | **0.93** | 1400 | **0.90** | 2240 | **0.93** | 3550 | **0.93** |
| 1180 | **0.94** | 1500 | **0.91** | 2360 | **0.93** | 3750 | **0.94** |
| 1250 | **0.95** | 1600 | **0.92** | 2500 | **0.94** | 4000 | **0.95** |
| 1320 | **0.96** | 1700 | **0.93** | 2650 | **0.95** | 4250 | **0 96** |
| 1400 | **0.98** | 1800 | **0.94** | 2800 | **0.96** | 4500 | **0.97** |
| 1500 | **0.99** | 1900 | **0.95** | 3000 | **0.97** | 4750 | **0.98** |
| **1600** | **1.00** | 2000 | **0.96** | 3150 | **0.98** | 5000 | **0.98** |
| 1700 | **1.01** | 2120 | **0.97** | 3350 | **0.99** | 5300 | **0.99** |
| 1800 | **1.02** | 2240 | **0.98** | **3550** | **1.00** | **5600** | **1.00** |
| 1900 | **1.03** | 2360 | **0.99** | 3750 | **1.01** | 6000 | **1.01** |
| 2000 | **1.04** | **2500** | **1.00** | 4000 | **1.02** | 6300 | **1.02** |
| 2120 | **1.05** | 2650 | **1.01** | 4250 | **1.03** | 6700 | **1.03** |
| 2240 | **1.06** | 2800 | **1.02** | 4500 | **1.04** | 7100 | **1.04** |
| 2360 | **1.07** | 3000 | **1.03** | 4700 | **1.04** | 7500 | **1.04** |
| 2500 | **1.08** | 3150 | **1.04** | 5000 | **1.05** | 8000 | **1.05** |
| 2650 | **1.09** | 3350 | **1.05** | 5300 | **1.06** | 8500 | **1.06** |
| 2800 | **1.10** | 3550 | **1.06** | 5600 | **1.07** | 9000 | **1.07** |
| 3000 | **1.11** | 3750 | **1.07** | 6000 | **1.08** | 9500 | **1.08** |
| 3150 | **1.12** | 4000 | **1.08** | 6300 | **1.09** | 10000 | **1.09** |
| 3350 | **1.13** | 4250 | **1.09** | 6700 | **1.10** | 10600 | **1.09** |
| 3550 | **1.15** | 4500 | **1.10** | 7100 | **1.11** | 11200 | **1.10** |
| 3750 | **1.16** | 4750 | **1.11** | 7500 | **1.12** | 11800 | **1.11** |
| 4000 | **1.17** | 5000 | **1.12** | 8000 | **1.13** | 12500 | **1.12** |
| 4250 | **1.18** | 5300 | **1.13** | 8500 | **1.14** | 13200 | **1.13** |
| 4500 | **1.19** | 5600 | **1.14** | 9000 | **1.15** | 14000 | **1.14** |
| | | 6000 | **1.15** | 9500 | **1.16** | 15000 | **1.15** |
| | | | | 10000 | **1.17** | | |

# Design Calculation

## Length Factor $c_3$ for optibelt Wedge Belts and Kraftbands

*Table 19*

| Section 3V/9N, 3VX/9NX 3V/9J, 3VX/9JX | | | Section 5V/15N, 5VX/15NX 5V/15J, 5VX/15JX | | | Section 8V/25N 8V/25J | | |
|---|---|---|---|---|---|---|---|---|
| Belt designation | Outside length (mm) | $c_3$ | Belt designation | Outside length (mm) | $c_3$ | Belt designation | Outside length (mm) | $c_3$ |
| 3V 265 | 673 | **0.84** | 5V 500 | 1270 | **0.84** | 8V 1000 | 2540 | **0.87** |
| 3V 280 | 711 | **0.85** | 5V 530 | 1346 | **0.85** | 8V 1060 | 2692 | **0.87** |
| 3V 300 | 762 | **0.86** | 5V 560 | 1422 | **0.85** | 8V 1120 | 2845 | **0 88** |
| 3V 315 | 800 | **0.87** | 5V 600 | 1524 | **0.87** | 8V 1180 | 2997 | **0.89** |
| 3V 335 | 851 | **0.88** | 5V 630 | 1600 | **0.87** | 8V 1250 | 3175 | **0.90** |
| 3V 355 | 902 | **0.90** | 5V 670 | 1702 | **0.88** | 8V 1320 | 3353 | **0.91** |
| 3V 375 | 952 | **0.91** | 5V 710 | 1803 | **0.89** | 8V 1400 | 3556 | **0.92** |
| 3V 400 | 1016 | **0.92** | 5V 750 | 1905 | **0.90** | 8V 1500 | 3810 | **0.93** |
| 3V 425 | 1079 | **0.93** | 5V 800 | 2032 | **0.91** | 8V 1600 | 4064 | **0.93** |
| 3V 450 | 1143 | **0.94** | 5V 850 | 2159 | **0.92** | 8V 1700 | 4318 | **0.94** |
| 3V 475 | 1206 | **0.95** | 5V 900 | 2286 | **0.93** | 8V 1800 | 4572 | **0.95** |
| 3V 500 | 1270 | **0.96** | 5V 950 | 2413 | **0.94** | 8V 1900 | 4826 | **0.96** |
| 3V 530 | 1346 | **0.97** | 5V 1000 | 2540 | **0.95** | 8V 2000 | 5080 | **0.97** |
| 3V 560 | 1422 | **0.98** | 5V 1060 | 2692 | **0.96** | 8V 2120 | 5385 | **0.98** |
| 3V 600 | 1524 | **0.99** | 5V 1120 | 2845 | **0.96** | 8V 2240 | 5690 | **0.98** |
| **3V 630** | **1600** | **1.00** | 5V 1180 | 2997 | **0.97** | 8V 2360 | 5994 | **0.99** |
| 3V 670 | 1702 | **1.01** | 5V 1250 | 3175 | **0.98** | **8V 2500** | **6350** | **1.00** |
| 3V 710 | 1803 | **1.02** | 5V 1320 | 3353 | **0.99** | 8V 2650 | 6731 | **1.01** |
| 3V 750 | 1905 | **1.03** | **5V 1400** | **3556** | **1.00** | 8V 2800 | 7112 | **1.02** |
| 3V 800 | 2032 | **1.04** | 5V 1500 | 3810 | **1.01** | 8V 3000 | 7620 | **1.03** |
| 3V 850 | 2159 | **1.05** | 5V 1600 | 4064 | **1.02** | 8V 3150 | 8001 | **1.03** |
| 3V 900 | 2286 | **1.07** | 5V 1700 | 4318 | **1.03** | 8V 3350 | 8509 | **1.04** |
| 3V 950 | 2413 | **1.07** | 5V 1800 | 4572 | **1.04** | 8V 3550 | 9017 | **1.05** |
| 3V 1000 | 2540 | **1.08** | 5V 1900 | 4826 | **1.05** | 8V 3750 | 9525 | **1.06** |
| 3V 1060 | 2692 | **1.09** | 5V 2000 | 5080 | **1.06** | 8V 4000 | 10160 | **1.07** |
| 3V 1120 | 2845 | **1.11** | 5V 2120 | 5385 | **1.07** | 8V 4250 | 10795 | **1.08** |
| 3V 1180 | 2997 | **1.11** | 5V 2240 | 5690 | **1.07** | 8V 4500 | 11430 | **1.09** |
| 3V 1250 | 3175 | **1.13** | 5V 2360 | 5994 | **1.08** | 8V 4750 | 12065 | **1.09** |
| 3V 1320 | 3353 | **1.14** | 5V 2500 | 6350 | **1.09** | 8V 5000 | 12700 | **1.10** |
| 3V 1400 | 3556 | **1.15** | 5V 2650 | 6731 | **1.10** | 8V 5300 | 13462 | **1.11** |
| 3V 1500 | 3810 | **1.16** | 5V 2800 | 7112 | **1.11** | 8V 5600 | 14224 | **1.12** |
| 3V 1600 | 4064 | **1.17** | 5V 3000 | 7620 | **1.12** | 8V 6000 | 15240 | **1.13** |
| 3V 1700 | 4318 | **1.18** | 5V 3150 | 8001 | **1.13** | 8V 6300 | 16002 | **1.13** |
| 3V 1800 | 4572 | **1.19** | 5V 3350 | 8509 | **1.14** | | | |
| 3V 1900 | 4826 | **1.20** | 5V 3550 | 9017 | **1.15** | | | |
| 3V 2000 | 5080 | **1.21** | 5V 3750 | 9525 | **1.16** | | | |
| | | | 5V 4000 | 10160 | **1.17** | | | |

optibelt
Power Transmission

# Design Calculation

## Length Factor $c_3$ for optibelt Wedge Belts and Kraftbands

*Table 20*

| Section 5* | | Section Y/6* | | Section 8 | | Section Z/10, ZX/X10 | | Section A/13, AX/X13 | | Section B/17, BX/X17 | | Section 20 | |
|---|---|---|---|---|---|---|---|---|---|---|---|---|---|
| Datum length (mm) | $c_3$ | Datum length (mm) | $c_3$ | Datum length (mm) | $c_3$ | Datum length (mm) | $c_3$ | Datum length (mm) | $c_3$ | Datum length (mm) | $c_3$ | Datum length (mm) | $c_3$ |
| 172 | **0.87** | 280 | **0,97** | 299* | **0.86** | 422* | **0.86** | 660 | **0.80** | 900 | **0.81** | 948 | **0.75** |
| 202 | **0.91** | 295 | **0,99** | 334* | **0.88** | 447* | **0.87** | 740 | **0.82** | 990 | **0.83** | 998 | **0.76** |
| 248 | **0.95** | **315** | **1,00** | 374* | **0.91** | 472* | **0.88** | 780 | **0.83** | 1040 | **0.84** | 1048 | **0.77** |
| 277 | **0.97** | 330 | **1,01** | 419* | **0.93** | 497* | **0.89** | 830 | **0.85** | 1100 | **0.85** | 1168 | **0.79** |
| 292 | **0.99** | 350 | **1,02** | 444* | **0.94** | 522* | **0.90** | 880 | **0.86** | 1140 | **0.85** | 1228 | **0.80** |
| **312** | **1.00** | 370 | **1,04** | 469* | **0.95** | 552* | **0.92** | 930 | **0.87** | 1220 | **0.87** | 1298 | **0.81** |
| 327 | **1.01** | 390 | **1,05** | 494* | **0.97** | 582* | **0.93** | 980 | **0.88** | 1290 | **0.88** | 1368 | **0.82** |
| 334 | **1.01** | 415 | **1,06** | 549* | **0.99** | 622 | **0.94** | 1030 | **0.89** | 1360 | **0.89** | 1448 | **0.83** |
| 347 | **1.02** | 440 | **1 07** | **579*** | **1.00** | 652 | **0.95** | 1090 | **0.90** | 1440 | **0.90** | 1548 | **0.85** |
| 364 | **1.03** | 465 | **1,09** | 594* | **1.01** | 692 | **0.96** | 1150 | **0.91** | 1540 | **0.92** | 1648 | **0.86** |
| 387 | **1.05** | 490 | **1,10** | 619* | **1.01** | 732 | **0.98** | 1210 | **0.92** | 1640 | **0.93** | 1848 | **0.88** |
| 418 | **1.06** | 515 | **1,11** | 649* | **1.02** | **822** | **1.00** | 1280 | **0.94** | 1740 | **0.94** | 2048 | **0.91** |
| 437 | **1.07** | 555 | **1,13** | 689* | **1.04** | 847 | **1.01** | 1350 | **0.95** | 1840 | **0.95** | 2168 | **0.92** |
| 487 | **1.10** | 615 | **1,15** | 729* | **1.05** | 887 | **1.02** | 1430 | **0.96** | 1940 | **0.97** | 2298 | **0.93** |
| 512 | **1.11** | 725 | **1,19** | 769* | **1.06** | 922 | **1.02** | 1530 | **0.97** | 2040 | **0.98** | 2408 | **0.94** |
| 524 | **1.11** | 765 | **1,20** | 819* | **1.08** | 947 | **1.03** | 1630 | **0.99** | 2160 | **0.99** | 2548 | **0.95** |
| 542 | **1.12** | 865 | **1,23** | 869 | **1.09** | 997 | **1.04** | **1730** | **1.00** | **2280** | **1.00** | 2698 | **0.96** |
| 566 | **1.13** | | | 894 | **1.10** | 1022 | **1.05** | 1830 | **1.01** | 2400 | **1.01** | 2848 | **0.98** |
| 612 | **1.15** | | | 919 | **1.10** | 1082 | **1.06** | 1930 | **1.02** | 2590 | **1.03** | 3048 | **0.99** |
| | | | | 969 | **1.11** | 1142 | **1.07** | 2030 | **1.03** | 2690 | **1.04** | **3198** | **1.00** |
| | | | | 1019 | **1.13** | 1172 | **1.08** | 2150 | **1.05** | 2840 | **1.05** | 3398 | **1.01** |
| | | | | 1139 | **1.15** | 1202 | **1.08** | 2270 | **1.06** | 3040 | **1.06** | 3598 | **1.03** |
| | | | | 1269 | **1.18** | 1272 | **1.10** | 2390 | **1.07** | 3190 | **1.07** | 3798 | **1.04** |
| | | | | 1339 | **1.19** | 1342 | **1.11** | 2530 | **1.08** | 3390 | **1.09** | 4048 | **1.05** |
| | | | | 1419 | **1.20** | 1422 | **1.12** | 2680 | **1.10** | 3590 | **1.10** | 4298 | **1.06** |
| | | | | 1519 | **1.22** | 1522 | **1.14** | 2830 | **1.11** | 3790 | **1.11** | 4548 | **1.08** |
| | | | | | | 1622 | **1.15** | 3030 | **1.12** | 4040 | **1.13** | 4798 | **1.09** |
| | | | | | | | | 3180 | **1.14** | 4290 | **1.14** | 5048 | **1.10** |
| | | | | | | | | 3380 | **1.15** | 4540 | **1.15** | 5348 | **1.11** |
| | | | | | | | | 3780 | **1.17** | 4790 | **1.17** | 5648 | **1.13** |
| | | | | | | | | 4030 | **1.19** | 5040 | **1.18** | 6048 | **1.14** |
| | | | | | | | | 4530 | **1.22** | 5340 | **1.19** | 6348 | **1.15** |
| | | | | | | | | 5030 | **1.24** | 5640 | **1.20** | 7148 | **1.18** |
| | | | | | | | | | | 6040 | **1.22** | 8048 | **1.21** |
| | | | | | | | | | | 6340 | **1.23** | | |

| Section C/22, CX/X22 | | | | Section 25 | | | | Section D/32 | | | | Section E/40 | |
|---|---|---|---|---|---|---|---|---|---|---|---|---|---|
| 1458 | **0.80** | 5058 | **1.06** | 1311 | **0.75** | 4311 | **0.99** | 3225 | **0.86** | 10075 | **1.10** | 4830 | **0.92** |
| 1558 | **0.81** | 5358 | **1.07** | 1461 | **0.77** | **4561** | **1.00** | 3425 | **0.87** | 10675 | **1.11** | 5080 | **0.93** |
| 1658 | **0.83** | 5658 | **1.09** | 1561 | **0.78** | 4811 | **1.01** | 3625 | **0.88** | 11275 | **1.13** | 5380 | **0.94** |
| 1858 | **0.85** | 6058 | **1.10** | 1661 | **0.79** | 5061 | **1.02** | 3825 | **0.89** | 11875 | **1.14** | 5680 | **0.95** |
| 1958 | **0.86** | 6358 | **1.11** | 1761 | **0.80** | 5361 | **1.04** | 4075 | **0.91** | 12575 | **1.15** | 6080 | **0.96** |
| 2058 | **0.87** | 6758 | **1.13** | 1861 | **0.81** | 5661 | **1.05** | 4325 | **0.92** | 13275 | **1.16** | 6380 | **0.97** |
| 2178 | **0.88** | 7158 | **1.14** | 1961 | **0.82** | 6061 | **1.06** | 4575 | **0.93** | 14075 | **1.18** | 6780 | **0.99** |
| 2298 | **0.89** | 7558 | **1.15** | 2061 | **0.83** | 6361 | **1.07** | 4825 | **0.94** | 15075 | **1.19** | **7180** | **1.00** |
| 2418 | **0.90** | 8058 | **1.17** | 2181 | **0.85** | 6761 | **1.09** | 5075 | **0.95** | 16075 | **1.21** | 7580 | **1.01** |
| 2558 | **0.92** | 9058 | **1.19** | 2301 | **0.86** | 7161 | **1.10** | 5375 | **0.96** | | | 8080 | **1.03** |
| 2708 | **0.93** | 10058 | **1.22** | 2421 | **0.87** | 7561 | **1.11** | 5675 | **0.98** | | | 8580 | **1.04** |
| 2858 | **0.94** | | | 2561 | **0.88** | 8061 | **1.13** | 6075 | **0.99** | | | 9080 | **1.05** |
| 3058 | **0.95** | | | 2711 | **0.89** | 9061 | **1.15** | **6375** | **1.00** | | | 9580 | **1.06** |
| 3208 | **0.96** | | | 2861 | **0.90** | 10061 | **1.18** | 6775 | **1.01** | | | 10080 | **1.07** |
| 3608 | **0.99** | | | 3061 | **0.92** | 11261 | **1.20** | 7175 | **1.03** | | | 10680 | **1.09** |
| **3808** | **1.00** | | | 3211 | **0.93** | 12561 | **1.23** | 7575 | **1.04** | | | 11280 | **1.10** |
| 4058 | **1.01** | | | 3411 | **0.94** | | | 8075 | **1.05** | | | 11880 | **1.11** |
| 4308 | **1.03** | | | 3611 | **0.95** | | | 8575 | **1.06** | | | 12580 | **1.12** |
| 4558 | **1.04** | | | 3811 | **0.96** | | | 9075 | **1.08** | | | 13280 | **1.14** |
| 4808 | **1.05** | | | 4061 | **0.98** | | | 9575 | **1.09** | | | 14080 | **1.15** |
| | | | | | | | | | | | | 15080 | **1.17** |
| | | | | | | | | | | | | 16080 | **1.18** |

*** Raw edge, moulded cogged V-belts**

# Design Calculation

## Guidelines for Selecting V-Belt and Kraftband Sections

By using the following diagrams, the most suitable belt section as far as efficiency and size are concerned, can be selected for a specific application. The most efficient power transmission is achieved by selecting as large a pulley diameter as possible for the section in question. The limits to be observed are the maximum permissible circumferential speed, namely $V_{max}$ = 42 m/s for high performance wedge belts and $V_{max}$ = 30 m/s for classical V-belts.

Experience has shown that the minimum pulley diameters should be avoided. These drives require a larger number of belts needing wider pulleys, and are therefore more costly.

In borderline cases it is recommended that the next smaller section belt be used on the same diameter pulley, as the smaller section will often save both cost and space. A further recommended solution is the use of the raw edge Optibelt Super TX M=S V-belts.

In such boundary areas it is advisable to design the drive with both sections and then to select the most suitable.

Comparing space requirement and costs, the wedge belt normally proves to be significantly superior to the classical V-belt for almost all industrial machinery drives. For this reason, new designs use wedge belts almost exclusively. It is only in special cases, for replacement requirements and with V-flat drives, that the use of classical section V-belts will be necessary.

*Diagram 1: Optibelt VB classical V-belts to BS 3790/DIN 2215*

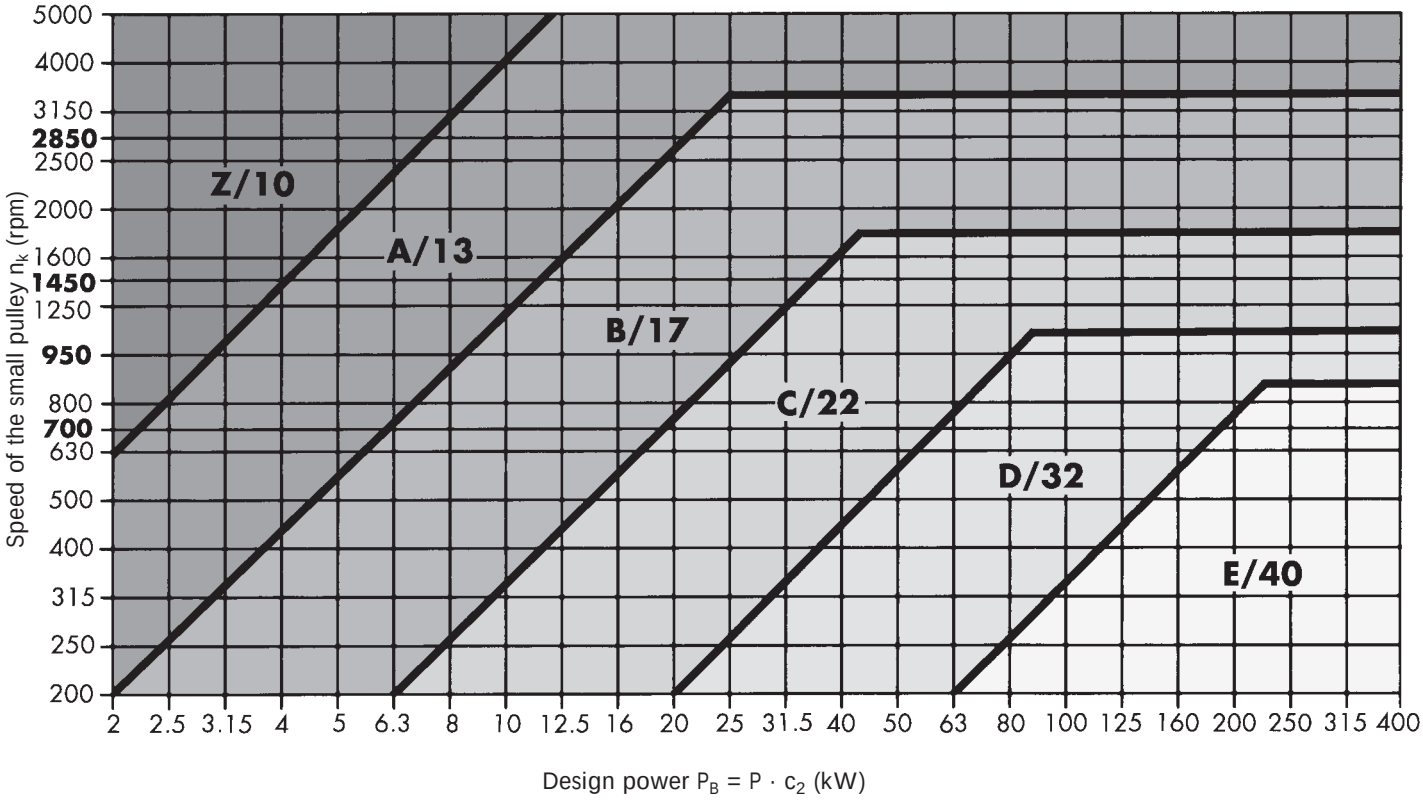

# Design Calculation

## Guidelines for Selecting V-Belt and Kraftband Sections

*Diagram 2: Optibelt SK wedge belts to BS 3790/DIN 7753 Part 1*

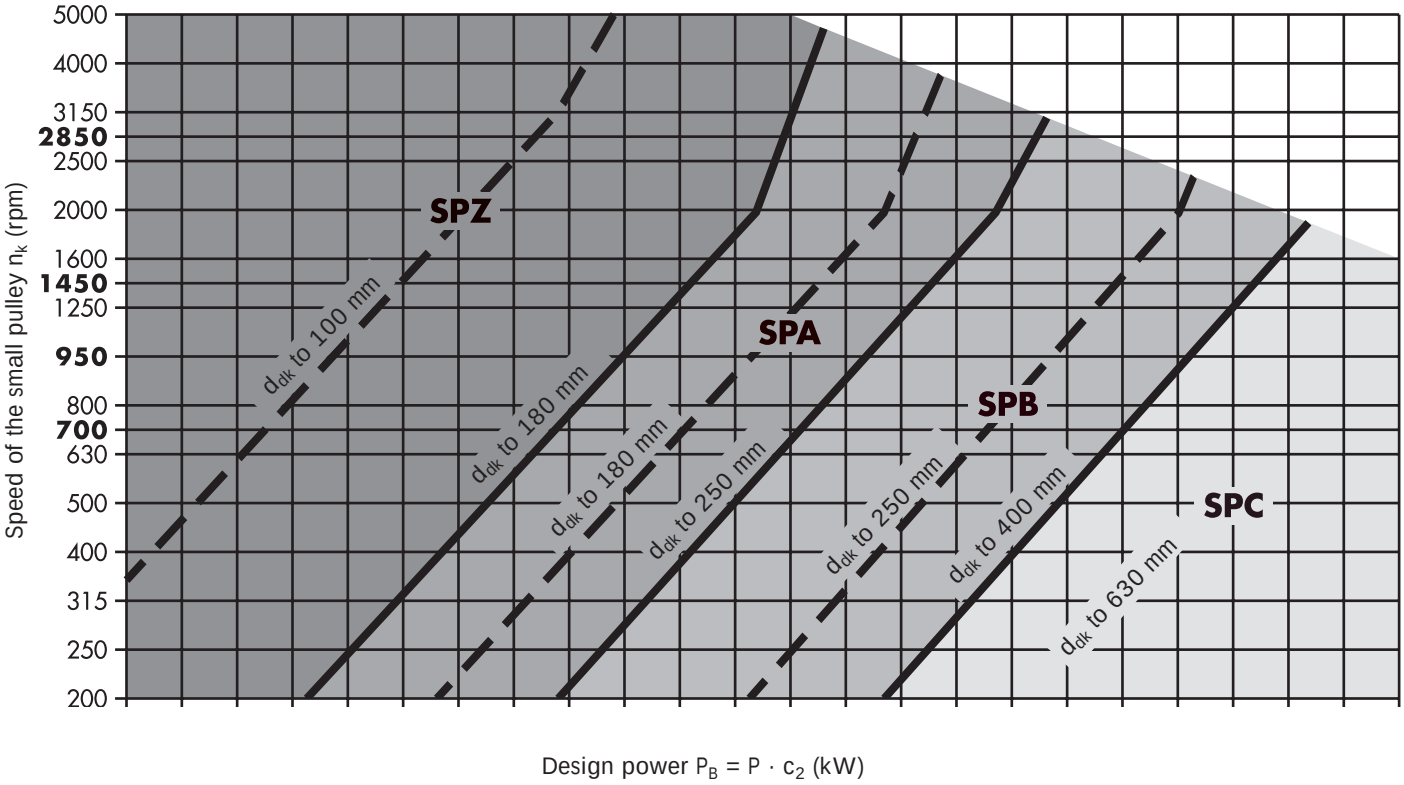


*Diagram 3: Optibelt SK wedge belts to USA Standard RMA/MPTA*

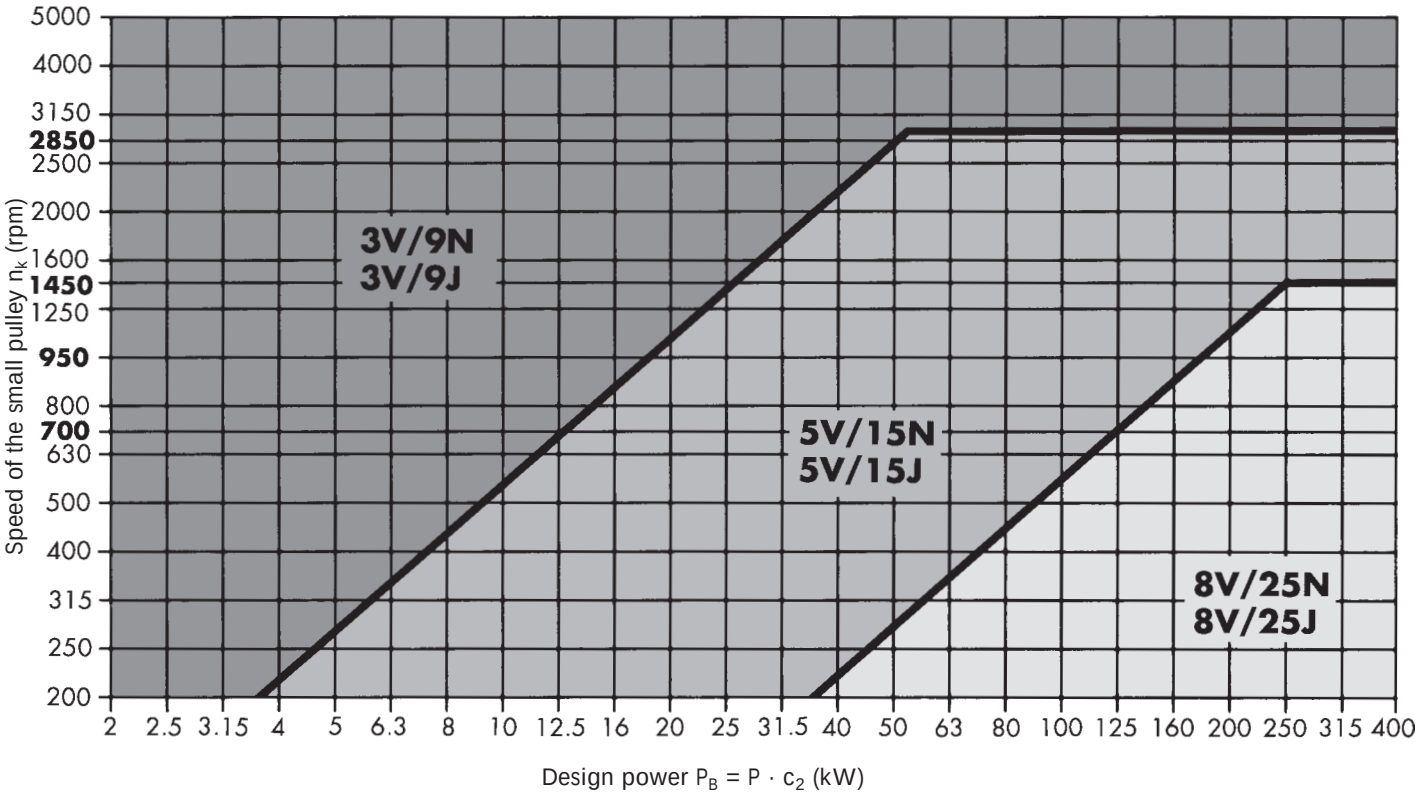

# Design Calculation

## Guidelines for Selecting V-Belt and Kraftband Sections

*Diagram 4: Optibelt Super TX M=S wedge belts*

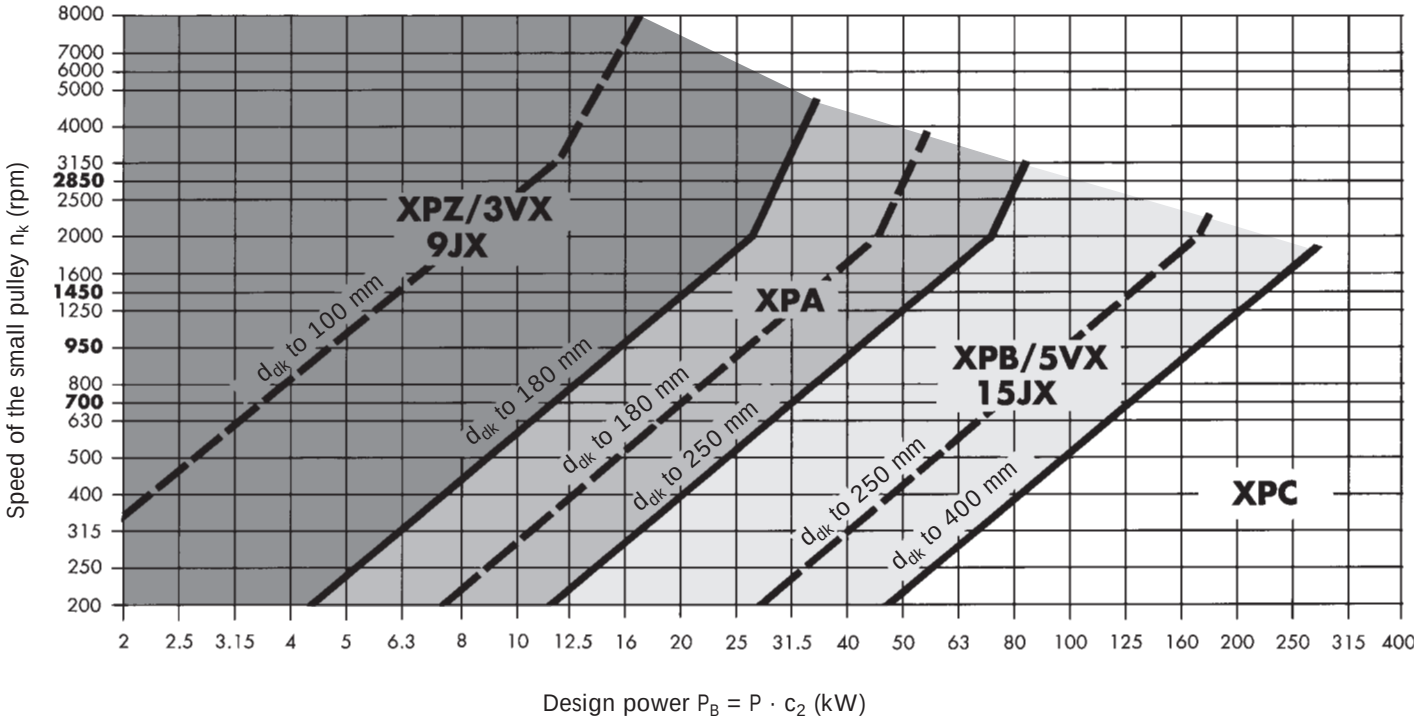


*Diagram 5: Optibelt Super TX M=S classical V-belts*

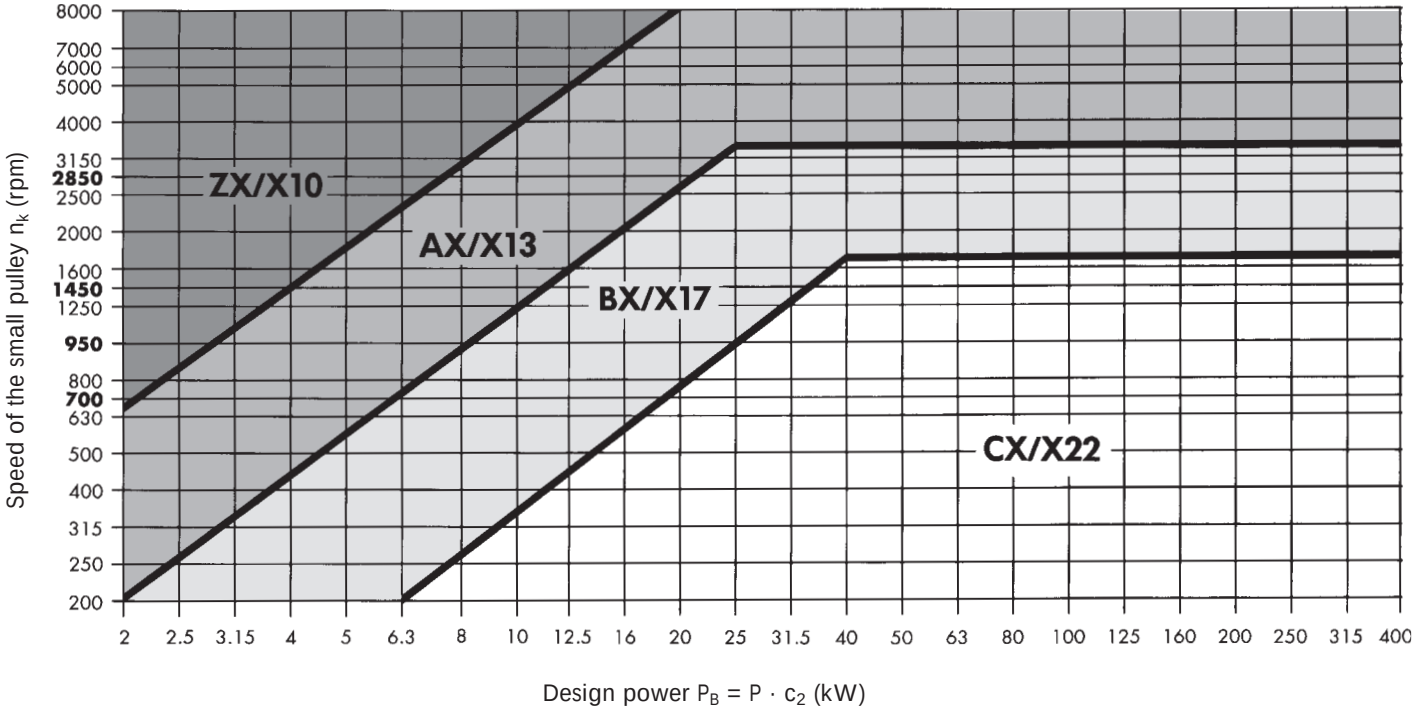

# Design Calculation

## Minimum Allowance x / y for Adjusting Drive Centre Distance $a_{nom}$

*Table 21: Optibelt SK wedge belts*

| Datum length (mm) | Minimum allowance x (mm) – for tensioning | Minimun allowance y (mm) – for fitting | | | |
|---|---|---|---|---|---|
| | | SPZ, XPZ | SPA, XPA | SPB, XPB | SPC, XPC |
| 487 ≤ 670 | 10 | 10 | 10 | — | — |
| > 670 ≤ 1 000 | 15 | 15 | 15 | — | — |
| > 1 000 ≤ 1 250 | 20 | 15 | 15 | — | — |
| > 1 250 ≤ 1 800 | 25 | 20 | 20 | 20 | — |
| > 1 800 ≤ 2 240 | 25 | 20 | 20 | 20 | 25 |
| > 2 240 ≤ 3 000 | 35 | 20 | 20 | 20 | 30 |
| > 3 000 ≤ 4 000 | 45 | 20 | 20 | 20 | 30 |
| > 4 000 ≤ 5 000 | 55 | 20 | 20 | 25 | 30 |
| > 5 000 ≤ 6 300 | 70 | 25 | 25 | 30 | 35 |
| > 6 300 ≤ 8 000 | 85 | 25 | 25 | 35 | 40 |
| > 8 000 ≤ 10 000 | 110 | 30 | 30 | 35 | 45 |
| > 10 000 ≤ 12 500 | 135 | — | — | 35 | 45 |
| > 12 500 ≤ 15 000 | 150 | — | — | 45 | 55 |
| > 15 000 ≤ 18 000 | 190 | — | — | 45 | 55 |

*Table 22: Optibelt SK wedge belts*

| Length designation | Outside length (mm) | Minimum allowance x (mm) – for tensioning | Minimum allowance y (mm) – for fitting | | |
|---|---|---|---|---|---|
| | | | 3V / 9N, 3VX / 9NX | 5V / 15N, 5VX / 15NX | 8V / 25N |
| > 265 ≤ 400 | > 673 ≤ 1 016 | 15 | 15 | — | — |
| > 400 ≤ 475 | > 1 016 ≤ 1 206 | 20 | 15 | — | — |
| > 475 ≤ 710 | > 1 206 ≤ 1 803 | 25 | 20 | 20 | — |
| > 710 ≤ 850 | > 1 803 ≤ 2 159 | 25 | 20 | 20 | — |
| > 850 ≤ 1 180 | > 2 159 ≤ 2 997 | 35 | 20 | 20 | 40 |
| > 1 180 ≤ 1 600 | > 2 997 ≤ 4 064 | 45 | 20 | 20 | 40 |
| > 1 600 ≤ 2 000 | > 4 064 ≤ 5 080 | 55 | 20 | 25 | 40 |
| > 2 000 ≤ 2 500 | > 5 080 ≤ 6 350 | 70 | — | 30 | 45 |
| > 2 500 ≤ 3 150 | > 6 350 ≤ 8 001 | 85 | — | 35 | 45 |
| > 3 150 ≤ 4 000 | > 8 001 ≤ 10 160 | 110 | — | 35 | 50 |
| > 4 000 ≤ 5 000 | > 10 160 ≤ 12 700 | 135 | — | 35 | 50 |
| > 5 000 ≤ 6 000 | > 12 700 ≤ 15 240 | 150 | — | 45 | 60 |
| > 6 000 ≤ 7 100 | > 15 240 ≤ 18 034 | 190 | — | 45 | 60 |

# Design Calculation

## Minimum Allowance x / y for Adjusting Drive Centre Distance $a_{nom}$

*Table 23: Optibelt VB classical V-belts*

| Datum length (mm) | Minimum allowance x (mm) – for tensioning | Minimum allowance y (mm) – for fitting | | | | | | | | | | |
|---|---|---|---|---|---|---|---|---|---|---|---|---|
| | | 5 | Y/6 | 8 | Z/10, ZX/X10 | A/13, AX/X13 | B/17, BX/X17 | 20 | C/22, CX/X22 | 25 | D/32 | E/40 |
| ≤ 200 | 5 | 10 | — | — | — | — | — | — | — | — | — | — |
| > 200 ≤ 250 | 5 | 10 | 10 | — | — | — | — | — | — | — | — | — |
| > 250 ≤ 315 | 5 | 10 | 10 | 10 | 10 | — | — | — | — | — | — | — |
| > 315 ≤ 670 | 10 | — | — | 10 | 10 | 10 | 10 | — | — | — | — | — |
| > 670 ≤ 1 000 | 15 | — | — | 10 | 15 | 15 | 15 | — | — | — | — | — |
| > 1 000 ≤ 1 250 | 20 | — | — | 15 | 15 | 15 | 15 | 20 | 20 | — | — | — |
| > 1 250 ≤ 1 800 | 25 | — | — | 15 | 20 | 20 | 20 | 20 | 25 | 25 | — | — |
| > 1 800 ≤ 2 240 | 25 | — | — | 20 | 20 | 20 | 20 | 25 | 25 | 30 | 35 | — |
| > 2 240 ≤ 3 000 | 35 | — | — | — | 20 | 20 | 20 | 25 | 30 | 30 | 35 | 40 |
| > 3 000 ≤ 4 000 | 45 | — | — | — | 20 | 20 | 20 | 25 | 30 | 30 | 35 | 40 |
| > 4 000 ≤ 5 000 | 55 | — | — | — | 20 | 20 | 20 | 30 | 30 | 30 | 35 | 40 |
| > 5 000 ≤ 6 300 | 70 | — | — | — | — | 20 | 25 | 35 | 35 | 35 | 40 | 45 |
| > 6 300 ≤ 8 000 | 85 | — | — | — | — | 20 | 25 | 40 | 40 | 40 | 45 | 50 |
| > 8 000 ≤ 10 000 | 110 | — | — | — | — | 25 | 25 | 40 | 45 | 45 | 45 | 50 |
| > 10 000 ≤ 12 500 | 135 | — | — | — | — | — | 30 | 40 | 45 | 45 | 50 | 55 |
| > 12 500 ≤ 15 000 | 150 | — | — | — | — | — | 40 | 50 | 55 | 55 | 60 | 65 |
| > 15 000 ≤ 18 000 | 190 | — | — | — | — | — | 40 | 50 | 55 | 55 | 60 | 65 |

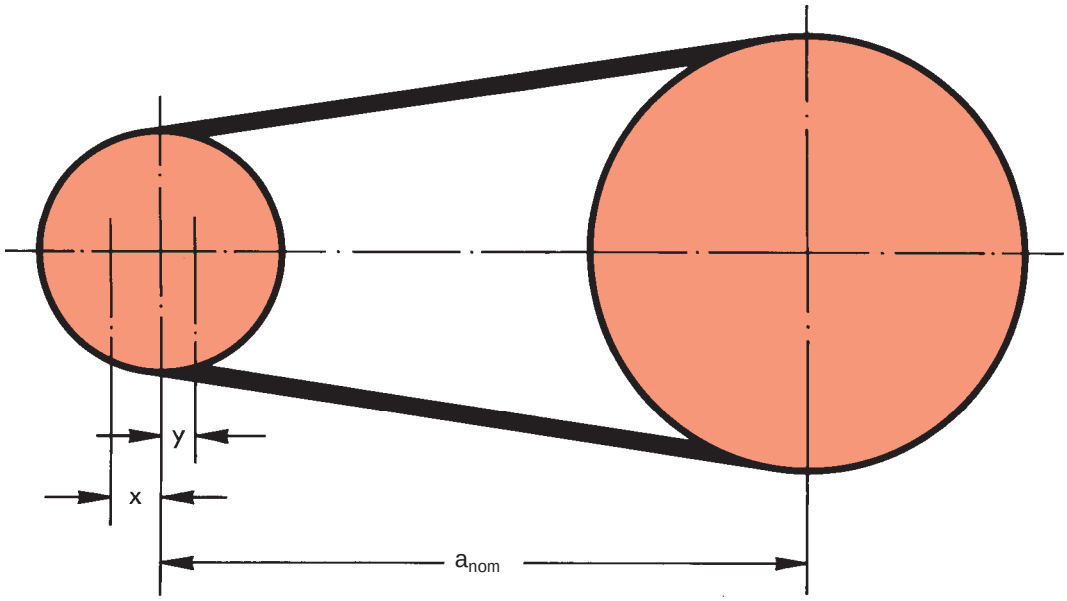

# Design Calculation

## Minimum Allowance x / y for Adjusting Drive Centre Distance $a_{nom}$

*Table 24: Optibelt KB Kraftbands with wedge belts*

| Length designation | Outside length (mm) | Minimum allowance x (mm) – for tensioning | Minimum allowance y (mm) – for smooth fitting | | | |
|---|---|---|---|---|---|---|
| | | | SPZ, 3V / 9J | SPA, SPB, 5V / 15J | 8V / 25J | SPC |
| 475 ≤ 710 | 1 206 ≤ 1 803 | 25 | 35 | 40 | — | — |
| > 710 ≤ 850 | > 1 803 ≤ 2 159 | 25 | 35 | 40 | — | — |
| > 850 ≤ 1 180 | > 2 159 ≤ 2 997 | 35 | 35 | 40 | 80 | — |
| > 1 180 ≤ 1 600 | > 2 997 ≤ 4 064 | 45 | 35 | 40 | 80 | 80 |
| > 1 600 ≤ 2 000 | > 4 064 ≤ 5 080 | 55 | 40 | 45 | 85 | 85 |
| > 2 000 ≤ 2 500 | > 5 080 ≤ 6 350 | 70 | 45 | 50 | 85 | 85 |
| > 2 500 ≤ 3 150 | > 6 350 ≤ 8 001 | 85 | 50 | 55 | 95 | 95 |
| > 3 150 ≤ 4 000 | > 8 001 ≤ 10 160 | 110 | 50 | 55 | 95 | 95 |
| > 4 000 ≤ 5 000 | > 10 160 ≤ 12 700 | 135 | — | 60 | 95 | 95 |
| > 5 000 ≤ 6 000 | > 12 700 ≤ 15 240 | 150 | — | 70 | 105 | 105 |
| > 6 000 ≤ 7 100 | > 15 240 ≤ 18 034 | 190 | — | 85 | 120 | 120 |

Note: Datum lengths must be considered for Kraftbands with sections SPZ, SPA, SPB and SPC.
For raw edge Kraftbands, the same x / y values apply.

*Table 25: Optibelt KB Kraftbands with classical V-belts*

| Lengths (mm) | Minimum allowance x (mm) – for tensioning | Minimum allowance y (mm) – for smooth fitting | | | |
|---|---|---|---|---|---|
| | | A / HA | B / HB | C / HC | D / HD |
| 1 200 ≤ 1 800 | 25 | 30 | 35 | — | — |
| > 1 800 ≤ 2 240 | 25 | 30 | 35 | — | — |
| > 2 240 ≤ 3 000 | 35 | 30 | 35 | 50 | 85 |
| > 3 000 ≤ 4 000 | 45 | 30 | 35 | 50 | 85 |
| > 4 000 ≤ 5 000 | 55 | 30 | 40 | 55 | 90 |
| > 5 000 ≤ 6 300 | 70 | 35 | 45 | 60 | 90 |
| > 6 300 ≤ 8 000 | 85 | 45 | 55 | 65 | 100 |
| > 8 000 ≤ 10 000 | 110 | 45 | 55 | 65 | 100 |
| > 10 000 ≤ 12 500 | 135 | 50 | 60 | 75 | 100 |
| > 12 500 ≤ 15 000 | 150 | 60 | 70 | 85 | 110 |
| > 15 000 ≤ 18 000 | 190 | 70 | 85 | 95 | 125 |

# Design Calculation

## Formulae and Calculation Examples

### Prime mover

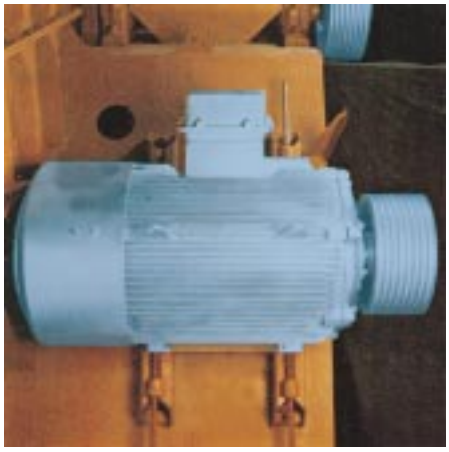

3-phase motor
P = 132 kW
$n_1$ = 1485 rpm
Star delta start
Starting torque $M_A = 0.65\ M_N$

### Operating conditions

Daily operation: approx. 18 hours
Number of starts: one per day
Operating conditions: normal room temperature, no exposure to oil, water or dust
Drive centre distance: between 1300 and 1500, variable
Pulley diameter: $d_{d1} \leq 300$ mm

### Driven machine

Fan
P = 132 kW
$n_2$ = 825 ± 15 rpm
Start-up: under load
Type of loading: continuous

Note: The calculation takes into consideration the standard specified by ISO for datum diameter $d_d$ (supersedes pitch diameter $d_w$) and datum length $L_d$ (supersedes pitch length $L_w$).

| Formulae | Calculation example |
|---|---|
| **Service factor**<br>$c_2$ from table 17 page 68 | $c_2$ = **1.3** |
| **Design Power**<br>$P_B = P \cdot c_2$ | $P_B = 132 \cdot 1.3 =$ **171.6 kW** |
| **Selection of belt section**<br>from Diagram 4 page 74 | **SPB** |
| **Speed ratio**<br>$i = \frac{n_1}{n_2} = \frac{d_{d2}}{d_{d1}}$ | $i = \frac{1485}{825} =$ **1.8** |
| **Datum diameters of the pulleys**<br>$d_{d1}$ selected from table 9 page 42<br>$d_{d2} = d_{d1} \cdot i$<br>$d_{d1} = \frac{d_{d2}}{i}$ | $d_{d1}$ = **280 mm** selected<br>$d_{d2}$ = 280 mm · 1.8 = 504<br>$d_{d2}$ = **500 mm** selected from table 9 page 42 |

# Design Calculation
## Formulae and Calculation Example

### Formulae

**Recalculation of the speed of the driven unit**

$$i_{vorh} = \frac{d_{d2}}{d_{d1}}$$

$$n_{2\ vorh} = \frac{n_1}{i_{vorh}}$$

### Calculation example

$$i_{vorh} = \frac{500}{280} = \mathbf{1{,}79}$$

$$n_{2\ vorh} = \frac{1485}{1{,}79} = \mathbf{830\ rpm}$$

Required:
825 ± 15 rpm
(requirement met)

**Drive centre distance** (preleminary choice)

Recommended: $a > 0{,}7\ (d_{dg} + d_{dk})$

$a < 2\ (d_{dg} + d_{dk})$

a = **1400 mm** selected

**Belt datum length**

$$L_{dth} \approx 2\,a + 1{,}57\,(d_{dg} + d_{dk}) + \frac{(d_{dg} - d_{dk})^2}{4\,a}$$

actual:

$$L_{dth} = 2\,a \cdot \sin\frac{\beta}{2} + \frac{\pi}{2}(d_{dg} + d_{dk}) + \frac{\alpha \cdot \pi}{180°}(d_{dg} - d_{dk})$$

$$L_{dth} \approx 2 \cdot 1400 + 1.57 \cdot 780 + \frac{220^2}{4 \cdot 1400} \approx 4033\ \text{mm}$$

next standard length selected from page 18

$L_{dSt}$ = **4000 mm**

**Drive centre distance (actual)**

Calculated from $L_{dSt}$ and $L_{dth}$

(if $L_{dSt} > L_{dth}$) $a_{nom} \approx a + \frac{L_{dSt} - L_{dth}}{2}$

(if $L_{dSt} < L_{dth}$) $a_{nom} \approx a - \frac{L_{dth} - L_{dSt}}{2}$

actual:

$$a_{nom} = \frac{L_{dSt} - \frac{\pi}{2}(d_{dg} + d_{dk})}{4} + \sqrt{\left[\frac{L_{dSt} - \frac{\pi}{2}(d_{dg} + d_{dk})}{4}\right]^2 - \frac{(d_{dg} - d_{dk})^2}{8}}$$

$$a_{nom} \approx 1400 - \frac{4033 - 4000}{2} \approx \mathbf{1383.5\ mm}$$

**Minimum allowance x / y for adjusting drive centre distance $a_{nom}$**

x / y from Table 21 page 75

x ≥ **45 mm** / y ≥ **20 mm**

**Belt speed and flex rate**

$$v = \frac{d_{dk} \cdot n_k}{19100} \qquad (v_{max} \approx 42\ \text{m/s})$$

$$f_b = \frac{2 \cdot 1000 \cdot v}{L_{dSt}} \qquad (f_{B\ max} \approx 100\ s^{-1})$$

**Speed and flex rate of the belt**

$$v = \frac{280 \cdot 1485}{19100} = \mathbf{21.76\ m/s}$$

$$f_b = \frac{2 \cdot 1000 \cdot 21.76}{4000} = \mathbf{10.88\ s^{-1}}$$

# Design Calculation

## Formulae and Calculation Examples

| Formulae | Calculation example |
|---|---|
| **Arc of contact and correction factor**<br>$\frac{d_{dg} - d_{dk}}{a_{nom}}$<br>$\beta°$ approximate and $c_1$ from table 16 page 67<br>actual: $\cos\frac{\beta}{2} = \frac{d_{dg} - d_{dk}}{2\ a_{nom}}$ | $\frac{500 - 280}{1383.5} = 0{,}16$<br>$\left.\begin{array}{l}\beta \approx 170.\\ c_1 = \mathbf{1.0}\end{array}\right\}$ linear interpolated |
| **Length factor**<br>$c_3$ from table 18 page 69 | $c_3 = \mathbf{1.02}$ |
| **Nominal power per belt**<br>$P_N$ for $\left\{\begin{array}{ll} d_{dk} & = 280\ \text{mm}\\ i & = 1.79\\ n_k & = 1485\ \text{min}^{-1}\end{array}\right.$ Section SPB from table 28 page 84 | $P_N = 20.63 + 1.23 = \mathbf{21.86\ kW}$ |
| **Number of belts**<br>$z = \frac{P \cdot c_2}{P_N \cdot c_1 \cdot c_3}$ | $z = \frac{132 \cdot 1.3}{21.86 \cdot 1.0 \cdot 1.02} = \mathbf{7.70}$<br>Suggested:<br>**8 Optibelt SK wedge belts SPB 4000 $L_d$ S=C plus** |
| **Minimum static tension per belt**<br>$T \approx \frac{500 \cdot (2.02 - c_1) \cdot P_B}{c_1 \cdot z \cdot v} + k \cdot v^2$<br>k from Diagram 8 page 123<br>(Multiply 'T' by 1.3 at initial installation) | $T \approx \frac{500 \cdot (2.02 - 1.0) \cdot 171.6}{1.0 \cdot 8 \cdot 21.76} + 0.19 \cdot 473.5 \approx \mathbf{593\ N}$<br>Initial installation:<br>$T = 593\ N \cdot 1.3 = \mathbf{771\ N}$ |
| **Minimum static shaft loading**<br>$S_a \approx 2\ T \cdot \sin\frac{\beta}{2} \cdot z$<br>(Multiply by a factor of 1.3 at initial installation) | $S_a \approx 2 \cdot 593 \cdot 0.9962 \cdot 8 \approx \mathbf{9452\ N}$<br>Initial installation:<br>$S_a = 9452\ N \cdot 1.3 = \mathbf{12288\ N}$ |
| **Belt deflection**<br>$E_a \approx \frac{E \cdot L}{100}$<br>E from Diagram 8 page 123<br>$L = a_{nom} \cdot \sin\frac{\beta}{2}$ | $E_a \approx \frac{2.7 \cdot 1378}{100} \approx \mathbf{37\ mm}$<br>$E \approx 2.7$ mm<br>$L = 1383.5 \cdot 0.9962 \cdot 1378$ mm |

optibelt
Power Transmission

# Drive Calculation
## optibelt CAP

The drive is to be equipped with:

- 8 Optibelt SK wedge belts SPC 6300 $L_d$ S = C plus
- Optibelt KS V-grooved pulley for taper bushes TB SPC 400-8
- Optibelt TB taper bush 4545 (bore diameter 55-110 mm)
- Optibelt KS V-grooved pulley for taper bushes TB SPC 800-8
- Optibelt TB taper bush 5050 (bore diameter 70-125 mm)

| | | | | Deviations / Hints |
|---|---|---|---|---|
| **Prime mover** | **:** | **three-phase motor** | | |
| **Driven machine** | **:** | **fan** | | |
| Design power | PB: | 373.33 | kW | |
| **Power prime mover** | **P:** | **224.00** | **kW** | |
| Torque driver pulley | M: | 1205 | Nm | |
| **Speed of the driver pulley** | **$n_1$:** | **1775** | **1/min** | |
| **Actual output rpm speed** | **$n_2$:** | **88** | **1/min** | -1 1/min |
| **Datum diameter pulley 1** | **$d_{d1}$:** | **400.00** | **mm** | |
| **Datum diameter pulley 2** | **$d_{d2}$:** | **800.00** | **mm** | |
| Datum length | $L_d$: | 6300 | mm | |
| **Actual drive centre distance** | a: | **2198.40** | **mm** | -1.60 mm |
| Actual drive ratio | i: | 2.00 | | 0.1% |
| Min. allow. for drive centre distance for belt mounting | y: | 35.00 | mm | |
| Min. allow. for drive centre distance for belt tensioning | x: | 70.00 | mm | |
| **Actual service factor** | **$c_2$:** | **1.87** | | |
| Belt speed | v: | 37.17 | m/s | Specific force required |
| Flex rate | fB: | 11.80 | 1/s | |
| Nominal power rating per belt | $P_N$: | 51.84 | kW | |
| Angle factor | $c_1$: | 0.99 | | |
| Belt length correction factor | $c_3$: | 1.02 | | |
| Arc of contact of small pulley | $\beta$: | 169.60 | ° | |
| Pulley face width | $b_2$: | 212.50 | mm | |
| Belt span length | <: | 2189.30 | mm | |
| **Calculated number of belts** | **zth:** | **7.11** | | for increased $c_2$ = 1.67 |
| Drive weight | | 276.87 | kg | |
| Statistic axle load, initial assembly | Sast: | 23988 | N | |
| Statistic axle load, existing belts | Sast: | 18452 | N | |
| Dynamic axle load | Sadyn: | 10547 | N | |

| **Procedures tensioning setting** | | **initial assembly** | **operating tension** |
|---|---|---|---|
| For increased $c_2$ = 1.67 | | New belts | existing belts |
| 1. OPTIKRIK II + III | static belt tension per V-belt : | 1505 N | 1158 N |
| 2. Depth of impression with tensioning gauge | test force : | 125 N | 125 N |
| | depth of belt deflection : | 40 mm | 50 mm |
| 3. Length addition per 1000 mm belt length | : | 5.8 mm | 4.3 mm |
| 4. Optibelt TT 2 tension tester | Frequency : | 14.4 Hz | 12.7 Hz |

# Power Ratings

## Section SPZ, 3V/9N, 3V/9J

## Nominal Power Rating $P_N$ (kW) for $\beta$ = 180° and $L_d$ = 1600 mm

*Table 26*

| Pulleys | v (m/s) | $n_k$ (min$^{-1}$) | Datum diameter of small pulley $d_{dk}$ (mm) 63 | 71 | 80 | 85 | 90 | 95 | 100 | 112 | 125 | 132 | 140 | 150 | 160 | 180 | 200 | Additional power (kW) per belt for speed ratio i 1,01 to 1,05 | 1,06 to 1,26 | 1,27 to 1,57 | >1,57 |
|---|---|---|---|---|---|---|---|---|---|---|---|---|---|---|---|---|---|---|---|---|---|
| Statically balanced | | **700** | 0.50 | 0.68 | 0.88 | 1.00 | 1.11 | 1.22 | 1.33 | 1.60 | 1.88 | 2.03 | 2.20 | 2.42 | 2.63 | 3.05 | 3.47 | 0.01 | 0.06 | 0.09 | 0.11 |
| | | **950** | 0.63 | 0.87 | 1.14 | 1.29 | 1.44 | 1.59 | 1.74 | 2.08 | 2.46 | 2.66 | 2.89 | 3.17 | 3.45 | 4.00 | 4.54 | 0.01 | 0.09 | 0.12 | 0.15 |
| | | **1450** | 0.87 | 1.23 | 1.62 | 1.84 | 2.06 | 2.27 | 2.49 | 3.00 | 3.54 | 3.83 | 4.16 | 4.56 | 4.96 | 5.75 | 6.51 | 0.02 | 0.13 | 0.19 | 0.23 |
| | | **2850** | 1.38 | 2.03 | 2.74 | 3.13 | 3.52 | 3.90 | 4.27 | 5.15 | 6.07 | 6.55 | 7.08 | 7.72 | 8.34 | 9.50 | 10.55 | 0.04 | 0.26 | 0.37 | 0.46 |
| | | 100 | 0.10 | 0.13 | 0.16 | 0.18 | 0.20 | 0.22 | 0.24 | 0.28 | 0.33 | 0.35 | 0.38 | 0.42 | 0.45 | 0.52 | 0.59 | 0.00 | 0.01 | 0.01 | 0.02 |
| | | 200 | 0.18 | 0.24 | 0.30 | 0.34 | 0.37 | 0.41 | 0.44 | 0.52 | 0.61 | 0.66 | 0.71 | 0.78 | 0.85 | 0.98 | 1.12 | 0.00 | 0.02 | 0.03 | 0.03 |
| | | 300 | 0.25 | 0.33 | 0.43 | 0.48 | 0.53 | 0.58 | 0.63 | 0.75 | 0.88 | 0.95 | 1.03 | 1.13 | 1.23 | 1.42 | 1.62 | 0.00 | 0.03 | 0.04 | 0.05 |
| | | 400 | 0.32 | 0.43 | 0.55 | 0.62 | 0.68 | 0.75 | 0.81 | 0.97 | 1.14 | 1.23 | 1.34 | 1.47 | 1.59 | 1.85 | 2.10 | 0.01 | 0.04 | 0.05 | 0.06 |
| | | 500 | 0.38 | 0.51 | 0.66 | 0.75 | 0.83 | 0.91 | 0.99 | 1.19 | 1.39 | 1.51 | 1.63 | 1.79 | 1.95 | 2.26 | 2.57 | 0.01 | 0.05 | 0.07 | 0.08 |
| | | 600 | 0.44 | 0.60 | 0.78 | 0.87 | 0.97 | 1.07 | 1.16 | 1.39 | 1.64 | 1.77 | 1.92 | 2.11 | 2.29 | 2.66 | 3.02 | 0.01 | 0.06 | 0.08 | 0.10 |
| | | 700 | 0.50 | 0.68 | 0.88 | 1.00 | 1.11 | 1.22 | 1.33 | 1.60 | 1.88 | 2.03 | 2.20 | 2.42 | 2.63 | 3.05 | 3.47 | 0.01 | 0.06 | 0.09 | 0.11 |
| | | 800 | 0.55 | 0.76 | 0.99 | 1.12 | 1.24 | 1.37 | 1.50 | 1.79 | 2.12 | 2.29 | 2.48 | 2.72 | 2.96 | 3.44 | 3.91 | 0.01 | 0.07 | 0.11 | 0.13 |
| | | 900 | 0.61 | 0.84 | 1.09 | 1.24 | 1.38 | 1.52 | 1.66 | 1.99 | 2.35 | 2.54 | 2.75 | 3.02 | 3.29 | 3.81 | 4.33 | 0.01 | 0.08 | 0.12 | 0.15 |
| | | 1000 | 0.66 | 0.91 | 1.19 | 1.35 | 1.51 | 1.66 | 1.81 | 2.18 | 2.57 | 2.78 | 3.02 | 3.31 | 3.61 | 4.18 | 4.75 | 0.01 | 0.09 | 0.13 | 0.16 |
| | | 1100 | 0.71 | 0.98 | 1.29 | 1.46 | 1.63 | 1.80 | 1.97 | 2.37 | 2.79 | 3.02 | 3.28 | 3.60 | 3.92 | 4.54 | 5.16 | 0.02 | 0.10 | 0.14 | 0.18 |
| | | 1200 | 0.76 | 1.06 | 1.39 | 1.57 | 1.76 | 1.94 | 2.12 | 2.55 | 3.01 | 3.26 | 3.54 | 3.88 | 4.22 | 4.90 | 5.56 | 0.02 | 0.11 | 0.16 | 0.19 |
| | | 1300 | 0.80 | 1.12 | 1.48 | 1.68 | 1.88 | 2.07 | 2.27 | 2.73 | 3.23 | 3.49 | 3.79 | 4.16 | 4.52 | 5.24 | 5.95 | 0.02 | 0.12 | 0.17 | 0.21 |
| | | 1400 | 0.85 | 1.19 | 1.58 | 1.79 | 2.00 | 2.21 | 2.42 | 2.91 | 3.44 | 3.72 | 4.04 | 4.43 | 4.82 | 5.58 | 6.32 | 0.02 | 0.13 | 0.18 | 0.23 |
| | 5 | 1500 | 0.89 | 1.26 | 1.67 | 1.89 | 2.12 | 2.34 | 2.56 | 3.08 | 3.64 | 3.94 | 4.28 | 4.69 | 5.11 | 5.91 | 6.69 | 0.02 | 0.14 | 0.20 | 0.24 |
| | | 1600 | 0.93 | 1.32 | 1.76 | 2.00 | 2.23 | 2.47 | 2.70 | 3.26 | 3.85 | 4.16 | 4.52 | 4.95 | 5.39 | 6.23 | 7.05 | 0.02 | 0.15 | 0.21 | 0.26 |
| | | 1700 | 0.98 | 1.39 | 1.85 | 2.10 | 2.35 | 2.59 | 2.84 | 3.42 | 4.05 | 4.38 | 4.75 | 5.21 | 5.66 | 6.55 | 7.40 | 0.02 | 0.16 | 0.22 | 0.27 |
| | | 1800 | 1.02 | 1.45 | 1.93 | 2.20 | 2.46 | 2.72 | 2.98 | 3.59 | 4.24 | 4.59 | 4.98 | 5.46 | 5.93 | 6.85 | 7.74 | 0.03 | 0.17 | 0.24 | 0.29 |
| | | 1900 | 1.06 | 1.51 | 2.02 | 2.29 | 2.57 | 2.84 | 3.11 | 3.75 | 4.43 | 4.80 | 5.20 | 5.70 | 6.19 | 7.15 | 8.07 | 0.03 | 0.18 | 0.25 | 0.31 |
| | | 2000 | 1.10 | 1.57 | 2.10 | 2.39 | 2.68 | 2.96 | 3.24 | 3.91 | 4.62 | 5.00 | 5.42 | 5.94 | 6.45 | 7.44 | 8.38 | 0.03 | 0.19 | 0.26 | 0.32 |
| | | 2100 | 1.13 | 1.63 | 2.18 | 2.48 | 2.78 | 3.08 | 3.37 | 4.07 | 4.81 | 5.20 | 5.64 | 6.17 | 6.70 | 7.72 | 8.68 | 0.03 | 0.19 | 0.28 | 0.34 |
| | | 2200 | 1.17 | 1.69 | 2.26 | 2.58 | 2.89 | 3.20 | 3.50 | 4.22 | 4.99 | 5.39 | 5.84 | 6.40 | 6.94 | 7.99 | 8.98 | 0.03 | 0.20 | 0.29 | 0.35 |
| | | 2300 | 1.20 | 1.74 | 2.34 | 2.67 | 2.99 | 3.31 | 3.63 | 4.38 | 5.17 | 5.58 | 6.05 | 6.62 | 7.18 | 8.25 | 9.26 | 0.03 | 0.21 | 0.30 | 0.37 |
| | | 2400 | 1.24 | 1.80 | 2.42 | 2.75 | 3.09 | 3.42 | 3.75 | 4.52 | 5.34 | 5.77 | 6.25 | 6.84 | 7.41 | 8.50 | 9.52 | 0.03 | 0.22 | 0.32 | 0.39 |
| | | 2500 | 1.27 | 1.85 | 2.49 | 2.84 | 3.19 | 3.53 | 3.87 | 4.67 | 5.51 | 5.95 | 6.44 | 7.04 | 7.63 | 8.74 | 9.77 | 0.04 | 0.23 | 0.33 | 0.40 |
| | | 2600 | 1.31 | 1.90 | 2.57 | 2.93 | 3.28 | 3.64 | 3.99 | 4.81 | 5.67 | 6.12 | 6.63 | 7.25 | 7.84 | 8.97 | 10.01 | 0.04 | 0.24 | 0.34 | 0.42 |
| | | 2700 | 1.34 | 1.96 | 2.64 | 3.01 | 3.38 | 3.74 | 4.10 | 4.95 | 5.83 | 6.30 | 6.81 | 7.44 | 8.05 | 9.19 | 10.24 | 0.04 | 0.25 | 0.35 | 0.44 |
| | | 2800 | 1.37 | 2.01 | 2.71 | 3.09 | 3.47 | 3.85 | 4.22 | 5.08 | 5.99 | 6.46 | 6.99 | 7.63 | 8.25 | 9.40 | 10.45 | 0.04 | 0.26 | 0.37 | 0.45 |
| | | 2900 | 1.40 | 2.05 | 2.78 | 3.17 | 3.56 | 3.95 | 4.33 | 5.22 | 6.14 | 6.63 | 7.16 | 7.81 | 8.44 | 9.60 | 10.64 | 0.04 | 0.27 | 0.38 | 0.47 |
| | 10 | 3000 | 1.43 | 2.10 | 2.85 | 3.25 | 3.65 | 4.05 | 4.43 | 5.34 | 6.29 | 6.78 | 7.33 | 7.99 | 8.62 | 9.79 | 10.82 | 0.04 | 0.28 | 0.39 | 0.48 |
| | | 3100 | 1.45 | 2.15 | 2.91 | 3.33 | 3.74 | 4.14 | 4.54 | 5.47 | 6.43 | 6.93 | 7.49 | 8.16 | 8.79 | 9.96 | 10.99 | 0.04 | 0.29 | 0.41 | 0.50 |
| | | 3200 | 1.48 | 2.19 | 2.98 | 3.40 | 3.82 | 4.24 | 4.64 | 5.59 | 6.57 | 7.08 | 7.64 | 8.32 | 8.95 | 10.12 | 11.14 | 0.05 | 0.30 | 0.42 | 0.52 |
| | | 3300 | 1.51 | 2.24 | 3.04 | 3.48 | 3.91 | 4.33 | 4.74 | 5.71 | 6.71 | 7.22 | 7.79 | 8.47 | 9.11 | 10.28 | 11.27 | 0.05 | 0.31 | 0.43 | 0.53 |
| | | 3400 | 1.53 | 2.28 | 3.10 | 3.55 | 3.99 | 4.42 | 4.84 | 5.83 | 6.84 | 7.36 | 7.93 | 8.61 | 9.26 | 10.41 | 11.39 | 0.05 | 0.31 | 0.45 | 0.55 |
| | | 3500 | 1.56 | 2.32 | 3.16 | 3.62 | 4.06 | 4.50 | 4.94 | 5.94 | 6.96 | 7.49 | 8.07 | 8.75 | 9.39 | 10.54 | 11.48 | 0.05 | 0.32 | 0.46 | 0.56 |
| | | 3600 | 1.58 | 2.36 | 3.22 | 3.68 | 4.14 | 4.59 | 5.03 | 6.04 | 7.08 | 7.61 | 8.20 | 8.88 | 9.52 | 10.65 | 11.56 | 0.05 | 0.33 | 0.47 | 0.58 |
| | | 3700 | 1.60 | 2.40 | 3.28 | 3.75 | 4.22 | 4.67 | 5.12 | 6.15 | 7.20 | 7.73 | 8.32 | 9.00 | 9.64 | 10.75 | 11.62 | 0.05 | 0.34 | 0.49 | 0.60 |
| | | 3800 | 1.62 | 2.44 | 3.33 | 3.81 | 4.29 | 4.75 | 5.20 | 6.25 | 7.31 | 7.85 | 8.43 | 9.12 | 9.75 | 10.83 | 11.67 | 0.05 | 0.35 | 0.50 | 0.61 |
| | | 3900 | 1.64 | 2.48 | 3.39 | 3.88 | 4.36 | 4.83 | 5.29 | 6.35 | 7.41 | 7.95 | 8.54 | 9.22 | 9.85 | 10.90 | 11.69 | 0.06 | 0.36 | 0.51 | 0.63 |
| | | 4000 | 1.66 | 2.51 | 3.44 | 3.94 | 4.43 | 4.90 | 5.37 | 6.44 | 7.51 | 8.06 | 8.64 | 9.32 | 9.93 | 10.96 | 11.70 | 0.06 | 0.37 | 0.53 | 0.64 |
| | | 4100 | 1.68 | 2.55 | 3.49 | 4.00 | 4.49 | 4.97 | 5.45 | 6.53 | 7.61 | 8.15 | 8.73 | 9.41 | 10.01 | 11.00 | 11.68 | 0.06 | 0.38 | 0.54 | 0.66 |
| | | 4200 | 1.70 | 2.58 | 3.54 | 4.05 | 4.55 | 5.04 | 5.52 | 6.61 | 7.70 | 8.24 | 8.82 | 9.48 | 10.08 | 11.03 | 11.64 | 0.06 | 0.39 | 0.55 | 0.68 |
| | | 4300 | 1.72 | 2.61 | 3.58 | 4.11 | 4.62 | 5.11 | 5.59 | 6.69 | 7.78 | 8.32 | 8.90 | 9.55 | 10.13 | 11.04 | 11.59 | 0.06 | 0.40 | 0.57 | 0.69 |
| | | 4400 | 1.73 | 2.64 | 3.63 | 4.16 | 4.67 | 5.18 | 5.66 | 6.77 | 7.86 | 8.40 | 8.97 | 9.61 | 10.17 | 11.03 | 11.51 | 0.06 | 0.41 | 0.58 | 0.71 |
| | | 4500 | 1.75 | 2.67 | 3.67 | 4.21 | 4.73 | 5.24 | 5.73 | 6.84 | 7.93 | 8.47 | 9.03 | 9.66 | 10.21 | 11.01 | 11.41 | 0.06 | 0.42 | 0.59 | 0.73 |
| | 15 | 4600 | 1.76 | 2.70 | 3.71 | 4.26 | 4.78 | 5.30 | 5.79 | 6.91 | 8.00 | 8.53 | 9.09 | 9.70 | 10.23 | 10.97 | | 0.07 | 0.43 | 0.60 | 0.74 |
| | | 4700 | 1.77 | 2.73 | 3.75 | 4.30 | 4.84 | 5.35 | 5.85 | 6.97 | 8.06 | 8.59 | 9.13 | 9.73 | 10.24 | 10.92 | | 0.07 | 0.44 | 0.62 | 0.76 |
| | | 4800 | 1.78 | 2.75 | 3.79 | 4.35 | 4.88 | 5.40 | 5.91 | 7.03 | 8.11 | 8.63 | 9.17 | 9.76 | 10.23 | 10.85 | | 0.07 | 0.44 | 0.63 | 0.77 |
| | | 4900 | 1.80 | 2.78 | 3.83 | 4.39 | 4.93 | 5.45 | 5.96 | 7.08 | 8.16 | 8.68 | 9.20 | 9.77 | 10.22 | 10.76 | | 0.07 | 0.45 | 0.64 | 0.79 |
| | | 5000 | 1.81 | 2.80 | 3.86 | 4.43 | 4.97 | 5.50 | 6.01 | 7.13 | 8.20 | 8.71 | 9.22 | 9.77 | 10.19 | 10.65 | | 0.07 | 0.46 | 0.66 | 0.81 |
| | | 5100 | 1.81 | 2.82 | 3.89 | 4.47 | 5.02 | 5.55 | 6.05 | 7.18 | 8.24 | 8.74 | 9.24 | 9.75 | 10.15 | | | 0.07 | 0.47 | 0.67 | 0.82 |
| | | 5200 | 1.82 | 2.84 | 3.93 | 4.50 | 5.05 | 5.59 | 6.10 | 7.22 | 8.27 | 8.76 | 9.24 | 9.73 | 10.09 | | | 0.07 | 0.48 | 0.68 | 0.84 |
| | | 5300 | 1.83 | 2.86 | 3.95 | 4.53 | 5.09 | 5.63 | 6.14 | 7.26 | 8.29 | 8.77 | 9.23 | 9.70 | 10.03 | | | 0.08 | 0.49 | 0.70 | 0.85 |
| | | 5400 | 1.83 | 2.87 | 3.98 | 4.56 | 5.12 | 5.66 | 6.17 | 7.29 | 8.31 | 8.77 | 9.22 | 9.66 | 9.95 | | | 0.08 | 0.50 | 0.71 | 0.87 |
| | | 5500 | 1.84 | 2.89 | 4.01 | 4.59 | 5.16 | 5.69 | 6.20 | 7.31 | 8.32 | 8.77 | 9.20 | 9.60 | | | | 0.08 | 0.51 | 0.72 | 0.89 |
| | | 5600 | 1.84 | 2.90 | 4.03 | 4.62 | 5.18 | 5.72 | 6.23 | 7.33 | 8.32 | 8.75 | 9.16 | 9.53 | | | | 0.08 | 0.52 | 0.74 | 0.90 |
| | | 5800 | 1.84 | 2.93 | 4.07 | 4.66 | 5.23 | 5.77 | 6.28 | 7.36 | 8.30 | 8.71 | 9.07 | 9.37 | | | | 0.08 | 0.54 | 0.76 | 0.93 |
| | 20 | 6000 | 1.84 | 2.94 | 4.10 | 4.70 | 5.27 | 5.80 | 6.31 | 7.36 | 8.26 | 8.62 | 8.93 | | | | | 0.09 | 0.56 | 0.79 | 0.97 |
| | | 6200 | 1.84 | 2.96 | 4.12 | 4.72 | 5.29 | 5.82 | 6.32 | 7.35 | 8.19 | 8.51 | 8.76 | | | | | 0.09 | 0.57 | 0.81 | 1.00 |
| | | 6400 | 1.83 | 2.96 | 4.13 | 4.74 | 5.30 | 5.83 | 6.32 | 7.31 | 8.08 | 8.35 | 8.54 | | | | | 0.09 | 0.59 | 0.84 | 1.03 |
| | | 6600 | 1.81 | 2.96 | 4.14 | 4.74 | 5.30 | 5.82 | 6.30 | 7.25 | 7.94 | | | | | | | 0.09 | 0.61 | 0.87 | 1.06 |
| | | 6800 | 1.79 | 2.95 | 4.14 | 4.74 | 5.29 | 5.80 | 6.26 | 7.16 | 7.78 | | | | | | | 0.10 | 0.63 | 0.89 | 1.10 |
| | | 7000 | 1.77 | 2.94 | 4.12 | 4.72 | 5.27 | 5.76 | 6.21 | 7.05 | 7.58 | | | | | | | 0.10 | 0.65 | 0.92 | 1.13 |
| | | 7200 | 1.74 | 2.91 | 4.10 | 4.69 | 5.23 | 5.71 | 6.14 | 6.92 | 7.34 | | | | | | | 0.10 | 0.67 | 0.95 | 1.16 |
| | 25 | 7400 | 1.70 | 2.89 | 4.07 | 4.65 | 5.18 | 5.64 | 6.05 | 6.76 | | | | | | | | 0.11 | 0.69 | 0.97 | 1.19 |
| | | 7600 | 1.66 | 2.85 | 4.02 | 4.60 | 5.11 | 5.56 | 5.94 | 6.58 | | | | | | | | 0.11 | 0.70 | 1.00 | 1.22 |
| | | 7800 | 1.62 | 2.81 | 3.97 | 4.53 | 5.03 | 5.46 | 5.82 | 6.37 | | | | | | | | 0.11 | 0.72 | 1.03 | 1.26 |
| | | 8000 | 1.57 | 2.76 | 3.91 | 4.46 | 4.94 | 5.34 | 5.67 | 6.13 | | | | | | | | 0.11 | 0.74 | 1.05 | 1.29 |
| | | 8200 | 1.51 | 2.70 | 3.83 | 4.37 | 4.83 | 5.21 | 5.50 | | | | | | | | | 0.12 | 0.76 | 1.08 | 1.32 |
| | | 8400 | 1.45 | 2.63 | 3.75 | 4.27 | 4.70 | 5.05 | 5.32 | | | | | | | | | 0.12 | 0.78 | 1.10 | 1.35 |
| | | | 30 | 35 | | | 40 | | | | | | | | | | | | | | |
| | | | Dynamically balanced (for details see DIN 2211) | | | | | | | | | | | | | | | | | | |

Where v > 42 m/s, please consult our Applications Engineering Department

v (m/s)

Pulleys

Note: Pulley diameters shown are outside diameters for sections 3V/9N, 3V/9J.

# Power Ratings

## Section SPA

## Nominal Power Rating $P_N$ (kW) for $\beta$ = 180° and $L_d$ = 2500 mm

*Table 27*

| Pulleys | v (m/s) | $n_k$ (min$^{-1}$) | Datum diameter of small pulley $d_{dk}$ (mm) 90 | 100 | 112 | 118 | 125 | 132 | 140 | 150 | 160 | 180 | 200 | 224 | 250 | 280 | 315 | Additional power (kW) per belt for speed ratio i 1,01 to 1,05 | 1,06 to 1,26 | 1,27 to 1,57 | >1,57 |
|---|---|---|---|---|---|---|---|---|---|---|---|---|---|---|---|---|---|---|---|---|---|
| Statically balanced | | **700** | 1.17 | 1.55 | 1.99 | 2.21 | 2.47 | 2.72 | 3.01 | 3.37 | 3.73 | 4.44 | 5.14 | 5.97 | 6.85 | 7.86 | 9.01 | 0.02 | 0.15 | 0.21 | 0.26 |
| | | **950** | 1.49 | 1.98 | 2.57 | 2.86 | 3.20 | 3.53 | 3.91 | 4.39 | 4.86 | 5.78 | 6.70 | 7.78 | 8.92 | 10.21 | 11.68 | 0.03 | 0.20 | 0.29 | 0.36 |
| | | **1450** | 2.04 | 2.76 | 3.62 | 4.04 | 4.53 | 5.02 | 5.57 | 6.25 | 6.92 | 8.24 | 9.52 | 11.02 | 12.58 | 14.30 | 16.18 | 0.05 | 0.31 | 0.44 | 0.54 |
| | | **2850** | 3.14 | 4.40 | 5.88 | 6.60 | 7.43 | 8.23 | 9.13 | 10.21 | 11.25 | 13.21 | 14.97 | 16.81 | 18.43 | 19.78 | 20.57 | 0.09 | 0.61 | 0.87 | 1.07 |
| | | 100 | 0.23 | 0.30 | 0.37 | 0.40 | 0.45 | 0.49 | 0.54 | 0.60 | 0.65 | 0.77 | 0.89 | 1.03 | 1.18 | 1.35 | 1.55 | 0.00 | 0.02 | 0.03 | 0.04 |
| | | 200 | 0.42 | 0.54 | 0.68 | 0.75 | 0.83 | 0.91 | 1.00 | 1.11 | 1.22 | 1.45 | 1.67 | 1.94 | 2.22 | 2.55 | 2.92 | 0.01 | 0.04 | 0.06 | 0.07 |
| | | 300 | 0.59 | 0.76 | 0.96 | 1.07 | 1.18 | 1.30 | 1.43 | 1.60 | 1.76 | 2.09 | 2.41 | 2.80 | 3.21 | 3.68 | 4.23 | 0.01 | 0.06 | 0.09 | 0.11 |
| | | 400 | 0.75 | 0.97 | 1.24 | 1.37 | 1.52 | 1.67 | 1.85 | 2.06 | 2.28 | 2.70 | 3.12 | 3.63 | 4.16 | 4.78 | 5.49 | 0.01 | 0.09 | 0.12 | 0.15 |
| | | 500 | 0.90 | 1.17 | 1.50 | 1.66 | 1.85 | 2.03 | 2.25 | 2.51 | 2.77 | 3.30 | 3.81 | 4.43 | 5.09 | 5.84 | 6.70 | 0.02 | 0.11 | 0.15 | 0.19 |
| | | 600 | 1.04 | 1.36 | 1.75 | 1.94 | 2.16 | 2.38 | 2.63 | 2.95 | 3.26 | 3.87 | 4.48 | 5.21 | 5.98 | 6.86 | 7.88 | 0.02 | 0.13 | 0.18 | 0.22 |
| | | 700 | 1.17 | 1.55 | 1.99 | 2.21 | 2.47 | 2.72 | 3.01 | 3.37 | 3.73 | 4.44 | 5.14 | 5.97 | 6.85 | 7.86 | 9.01 | 0.02 | 0.15 | 0.21 | 0.26 |
| | | 800 | 1.30 | 1.72 | 2.23 | 2.47 | 2.76 | 3.05 | 3.38 | 3.78 | 4.19 | 4.99 | 5.77 | 6.71 | 7.70 | 8.82 | 10.11 | 0.03 | 0.17 | 0.24 | 0.30 |
| | | 900 | 1.43 | 1.90 | 2.45 | 2.73 | 3.05 | 3.37 | 3.74 | 4.19 | 4.64 | 5.52 | 6.39 | 7.43 | 8.52 | 9.76 | 11.17 | 0.03 | 0.19 | 0.27 | 0.34 |
| | 5 | 1000 | 1.55 | 2.06 | 2.68 | 2.98 | 3.34 | 3.69 | 4.09 | 4.58 | 5.07 | 6.04 | 7.00 | 8.12 | 9.32 | 10.66 | 12.18 | 0.03 | 0.22 | 0.31 | 0.37 |
| | | 1100 | 1.66 | 2.23 | 2.90 | 3.23 | 3.61 | 4.00 | 4.43 | 4.97 | 5.50 | 6.55 | 7.59 | 8.80 | 10.09 | 11.53 | 13.15 | 0.04 | 0.24 | 0.34 | 0.41 |
| | | 1200 | 1.77 | 2.38 | 3.11 | 3.47 | 3.88 | 4.30 | 4.76 | 5.34 | 5.92 | 7.05 | 8.16 | 9.46 | 10.84 | 12.37 | 14.08 | 0.04 | 0.26 | 0.37 | 0.45 |
| | | 1300 | 1.88 | 2.54 | 3.31 | 3.70 | 4.15 | 4.59 | 5.09 | 5.71 | 6.33 | 7.54 | 8.72 | 10.10 | 11.55 | 13.17 | 14.96 | 0.04 | 0.28 | 0.40 | 0.49 |
| | | 1400 | 1.99 | 2.69 | 3.52 | 3.93 | 4.40 | 4.87 | 5.41 | 6.07 | 6.72 | 8.01 | 9.26 | 10.72 | 12.25 | 13.93 | 15.79 | 0.05 | 0.30 | 0.43 | 0.52 |
| | | 1500 | 2.09 | 2.83 | 3.71 | 4.15 | 4.65 | 5.15 | 5.72 | 6.42 | 7.11 | 8.47 | 9.79 | 11.32 | 12.91 | 14.66 | 16.56 | 0.05 | 0.32 | 0.46 | 0.56 |
| | | 1600 | 2.19 | 2.97 | 3.91 | 4.37 | 4.90 | 5.43 | 6.02 | 6.76 | 7.49 | 8.91 | 10.29 | 11.89 | 13.54 | 15.34 | 17.29 | 0.05 | 0.34 | 0.49 | 0.60 |
| | | 1700 | 2.28 | 3.11 | 4.09 | 4.58 | 5.14 | 5.69 | 6.32 | 7.09 | 7.86 | 9.34 | 10.78 | 12.44 | 14.14 | 15.99 | 17.95 | 0.06 | 0.37 | 0.52 | 0.64 |
| | | 1800 | 2.37 | 3.24 | 4.27 | 4.78 | 5.37 | 5.95 | 6.61 | 7.42 | 8.21 | 9.76 | 11.25 | 12.97 | 14.71 | 16.59 | 18.56 | 0.06 | 0.39 | 0.55 | 0.67 |
| | | 1900 | 2.46 | 3.37 | 4.45 | 4.98 | 5.60 | 6.20 | 6.89 | 7.73 | 8.56 | 10.17 | 11.71 | 13.47 | 15.25 | 17.14 | 19.10 | 0.06 | 0.41 | 0.58 | 0.71 |
| | | 2000 | 2.54 | 3.50 | 4.62 | 5.18 | 5.82 | 6.45 | 7.16 | 8.03 | 8.89 | 10.55 | 12.14 | 13.94 | 15.75 | 17.65 | 19.57 | 0.07 | 0.43 | 0.61 | 0.75 |
| | | 2100 | 2.62 | 3.62 | 4.79 | 5.37 | 6.03 | 6.69 | 7.42 | 8.33 | 9.22 | 10.93 | 12.56 | 14.39 | 16.22 | 18.11 | 19.98 | 0.07 | 0.45 | 0.64 | 0.79 |
| | 10 | 2200 | 2.70 | 3.74 | 4.95 | 5.55 | 6.24 | 6.92 | 7.68 | 8.61 | 9.53 | 11.29 | 12.95 | 14.81 | 16.65 | 18.52 | 20.32 | 0.07 | 0.47 | 0.67 | 0.82 |
| | | 2300 | 2.78 | 3.85 | 5.11 | 5.73 | 6.44 | 7.14 | 7.93 | 8.89 | 9.83 | 11.63 | 13.32 | 15.20 | 17.04 | 18.87 | 20.58 | 0.08 | 0.50 | 0.70 | 0.86 |
| | | 2400 | 2.85 | 3.96 | 5.26 | 5.90 | 6.63 | 7.36 | 8.17 | 9.15 | 10.12 | 11.95 | 13.67 | 15.57 | 17.39 | 19.17 | 20.77 | 0.08 | 0.52 | 0.73 | 0.90 |
| | | 2500 | 2.92 | 4.07 | 5.41 | 6.07 | 6.82 | 7.56 | 8.39 | 9.41 | 10.39 | 12.26 | 14.00 | 15.90 | 17.70 | 19.41 | 20.87 | 0.08 | 0.54 | 0.76 | 0.94 |
| | | 2600 | 2.99 | 4.17 | 5.55 | 6.23 | 7.00 | 7.76 | 8.62 | 9.65 | 10.65 | 12.56 | 14.31 | 16.20 | 17.96 | 19.60 | 20.90 | 0.09 | 0.56 | 0.79 | 0.97 |
| | | 2700 | 3.05 | 4.27 | 5.69 | 6.38 | 7.18 | 7.96 | 8.83 | 9.88 | 10.90 | 12.83 | 14.59 | 16.47 | 18.19 | 19.72 | 20.83 | 0.09 | 0.58 | 0.82 | 1.01 |
| | | 2800 | 3.11 | 4.36 | 5.82 | 6.53 | 7.34 | 8.14 | 9.03 | 10.11 | 11.14 | 13.09 | 14.85 | 16.70 | 18.36 | 19.78 | 20.68 | 0.09 | 0.60 | 0.86 | 1.05 |
| | | 2900 | 3.16 | 4.45 | 5.94 | 6.67 | 7.50 | 8.32 | 9.22 | 10.32 | 11.36 | 13.32 | 15.08 | 16.90 | 18.49 | 19.77 | 20.44 | 0.10 | 0.62 | 0.89 | 1.09 |
| | | 3000 | 3.22 | 4.53 | 6.06 | 6.81 | 7.66 | 8.49 | 9.41 | 10.51 | 11.57 | 13.54 | 15.29 | 17.07 | 18.57 | 19.70 | | 0.10 | 0.65 | 0.92 | 1.12 |
| | | 3100 | 3.26 | 4.61 | 6.18 | 6.94 | 7.80 | 8.64 | 9.58 | 10.70 | 11.77 | 13.74 | 15.47 | 17.20 | 18.60 | | | 0.10 | 0.67 | 0.95 | 1.16 |
| | 15 | 3200 | 3.31 | 4.69 | 6.29 | 7.06 | 7.94 | 8.80 | 9.74 | 10.87 | 11.95 | 13.92 | 15.62 | 17.29 | 18.58 | | | 0.11 | 0.69 | 0.98 | 1.20 |
| | | 3300 | 3.35 | 4.76 | 6.39 | 7.18 | 8.07 | 8.94 | 9.89 | 11.03 | 12.11 | 14.07 | 15.75 | 17.34 | 18.51 | | | 0.11 | 0.71 | 1.01 | 1.24 |
| | | 3400 | 3.39 | 4.83 | 6.49 | 7.29 | 8.19 | 9.07 | 10.03 | 11.18 | 12.26 | 14.21 | 15.84 | 17.35 | 18.38 | | | 0.11 | 0.73 | 1.04 | 1.27 |
| | | 3500 | 3.43 | 4.89 | 6.58 | 7.39 | 8.31 | 9.19 | 10.17 | 11.32 | 12.40 | 14.32 | 15.91 | 17.33 | 18.20 | | | 0.12 | 0.75 | 1.07 | 1.31 |
| | | 3600 | 3.46 | 4.95 | 6.66 | 7.48 | 8.41 | 9.31 | 10.28 | 11.44 | 12.52 | 14.42 | 15.95 | 17.26 | | | | 0.12 | 0.77 | 1.10 | 1.35 |
| | | 3700 | 3.49 | 5.01 | 6.74 | 7.57 | 8.51 | 9.41 | 10.39 | 11.55 | 12.62 | 14.48 | 15.95 | 17.15 | | | | 0.12 | 0.80 | 1.13 | 1.39 |
| | | 3800 | 3.51 | 5.06 | 6.81 | 7.65 | 8.60 | 9.50 | 10.49 | 11.64 | 12.70 | 14.53 | 15.93 | 16.99 | | | | 0.13 | 0.82 | 1.16 | 1.42 |
| | | 3900 | 3.53 | 5.10 | 6.88 | 7.73 | 8.68 | 9.59 | 10.57 | 11.72 | 12.77 | 14.55 | 15.87 | 16.79 | | | | 0.13 | 0.84 | 1.19 | 1.46 |
| | | 4000 | 3.55 | 5.14 | 6.94 | 7.79 | 8.75 | 9.66 | 10.65 | 11.79 | 12.82 | 14.55 | 15.78 | 16.54 | | | | 0.13 | 0.86 | 1.22 | 1.50 |
| | | 4100 | 3.57 | 5.17 | 6.99 | 7.85 | 8.81 | 9.73 | 10.71 | 11.84 | 12.85 | 14.52 | 15.66 | | | | | 0.14 | 0.88 | 1.25 | 1.54 |
| | 20 | 4200 | 3.58 | 5.20 | 7.04 | 7.90 | 8.87 | 9.78 | 10.76 | 11.87 | 12.87 | 14.47 | 15.50 | | | | | 0.14 | 0.90 | 1.28 | 1.57 |
| | | 4300 | 3.58 | 5.23 | 7.08 | 7.95 | 8.91 | 9.82 | 10.79 | 11.89 | 12.86 | 14.39 | 15.30 | | | | | 0.14 | 0.93 | 1.31 | 1.61 |
| | | 4400 | 3.58 | 5.25 | 7.11 | 7.98 | 8.95 | 9.85 | 10.81 | 11.90 | 12.84 | 14.28 | 15.07 | | | | | 0.15 | 0.95 | 1.34 | 1.65 |
| | | 4500 | 3.58 | 5.26 | 7.13 | 8.01 | 8.97 | 9.87 | 10.82 | 11.88 | 12.80 | 14.15 | 14.80 | | | | | 0.15 | 0.97 | 1.37 | 1.69 |
| | | 4600 | 3.58 | 5.27 | 7.15 | 8.03 | 8.99 | 9.88 | 10.82 | 11.86 | 12.73 | 13.99 | | | | | | 0.15 | 0.99 | 1.41 | 1.72 |
| | | 4700 | 3.57 | 5.27 | 7.16 | 8.04 | 8.99 | 9.88 | 10.80 | 11.81 | 12.65 | 13.80 | | | | | | 0.16 | 1.01 | 1.44 | 1.76 |
| | | 4800 | 3.55 | 5.27 | 7.16 | 8.04 | 8.99 | 9.86 | 10.77 | 11.75 | 12.55 | 13.58 | | | | | | 0.16 | 1.03 | 1.47 | 1.80 |
| | | 4900 | 3.53 | 5.26 | 7.16 | 8.03 | 8.97 | 9.84 | 10.72 | 11.67 | 12.43 | 13.33 | | | | | | 0.16 | 1.05 | 1.50 | 1.84 |
| | | 5000 | 3.51 | 5.25 | 7.15 | 8.01 | 8.95 | 9.80 | 10.66 | 11.57 | 12.28 | 13.05 | | | | | | 0.17 | 1.08 | 1.53 | 1.87 |
| | | 5100 | 3.48 | 5.23 | 7.13 | 7.99 | 8.91 | 9.74 | 10.58 | 11.45 | 12.11 | | | | | | | 0.17 | 1.10 | 1.56 | 1.91 |
| | | 5200 | 3.45 | 5.21 | 7.10 | 7.95 | 8.86 | 9.68 | 10.49 | 11.32 | 11.92 | | | | | | | 0.17 | 1.12 | 1.59 | 1.95 |
| | 25 | 5300 | 3.42 | 5.18 | 7.06 | 7.91 | 8.80 | 9.60 | 10.39 | 11.17 | 11.71 | | | | | | | 0.18 | 1.14 | 1.62 | 1.99 |
| | | 5400 | 3.38 | 5.14 | 7.02 | 7.85 | 8.73 | 9.51 | 10.27 | 11.00 | 11.48 | | | | | | | 0.18 | 1.16 | 1.65 | 2.02 |
| | | 5500 | 3.33 | 5.10 | 6.96 | 7.79 | 8.65 | 9.41 | 10.13 | 10.81 | 11.22 | | | | | | | 0.18 | 1.18 | 1.68 | 2.06 |
| | | 5600 | 3.28 | 5.05 | 6.90 | 7.71 | 8.56 | 9.29 | 9.97 | 10.60 | | | | | | | | 0.19 | 1.21 | 1.71 | 2.10 |
| | | 5700 | 3.23 | 4.99 | 6.83 | 7.63 | 8.45 | 9.16 | 9.80 | 10.37 | | | | | | | | 0.19 | 1.23 | 1.74 | 2.13 |
| | | 5800 | 3.17 | 4.93 | 6.75 | 7.54 | 8.34 | 9.01 | 9.62 | 10.12 | | | | | | | | 0.19 | 1.25 | 1.77 | 2.17 |
| | | 5900 | 3.11 | 4.86 | 6.66 | 7.43 | 8.21 | 8.85 | 9.42 | 9.84 | | | | | | | | 0.20 | 1.27 | 1.80 | 2.21 |
| | | 6000 | 3.04 | 4.79 | 6.57 | 7.32 | 8.07 | 8.68 | 9.20 | 9.55 | | | | | | | | 0.20 | 1.29 | 1.83 | 2.25 |
| | | 6100 | 2.96 | 4.70 | 6.46 | 7.19 | 7.92 | 8.49 | 8.96 | | | | | | | | | 0.20 | 1.31 | 1.86 | 2.28 |
| | | 6200 | 2.89 | 4.62 | 6.34 | 7.06 | 7.75 | 8.29 | 8.70 | | | | | | | | | 0.21 | 1.33 | 1.89 | 2.32 |
| | 30 | 6300 | 2.80 | 4.52 | 6.22 | 6.91 | 7.57 | 8.07 | 8.43 | | | | | | | | | 0.21 | 1.36 | 1.92 | 2.36 |
| | | 6400 | 2.71 | 4.42 | 6.09 | 6.75 | 7.38 | 7.84 | 8.14 | | | | | | | | | 0.21 | 1.38 | 1.96 | 2.40 |
| | | 6500 | 2.62 | 4.31 | 5.94 | 6.58 | 7.17 | 7.59 | 7.83 | | | | | | | | | 0.22 | 1.40 | 1.99 | 2.43 |
| | | 6600 | 2.52 | 4.19 | 5.79 | 6.40 | 6.95 | | | | | | | | | | | 0.22 | 1.42 | 2.02 | 2.47 |
| | | 6700 | 2.42 | 4.07 | 5.62 | 6.21 | 6.72 | | | | | | | | | | | 0.22 | 1.44 | 2.05 | 2.51 |
| | | 6800 | 2.31 | 3.94 | 5.45 | 6.01 | 6.48 | | | | | | | | | | | 0.23 | 1.46 | 2.08 | 2.55 |
| | | 6900 | 2.19 | 3.80 | 5.27 | 5.79 | 6.22 | | | | | | | | | | | 0.23 | 1.49 | 2.11 | 2.58 |
| | | 7000 | 2.07 | 3.66 | 5.07 | 5.56 | 5.94 | | | | | | | | | | | 0.23 | 1.51 | 2.14 | 2.62 |
| | | | 35 | 40 | | | | | | | | | | | | | | | v (m/s) | | |
| Dynamically balanced (for details see DIN 2211) | | | | | | | | | | | | | | | | | | | Pulleys | | |

Where v > 42 m/s, please consult our Applications Engineering Department

# Power Ratings

## Section SPB, 5V/15N, 5V/15J

## Nominal Power Rating $P_N$ (kW) for $\beta$ = 180° and $L_d$ = 3550 mm

*Table 28*

| Pulleys | v (m/s) | $n_k$ (min$^{-1}$) | Datum diameter of small pulley $d_{dk}$ (mm) 140 | 150 | 160 | 180 | 190 | 200 | 212 | 224 | 236 | 250 | 280 | 315 | 355 | 375 | 400 | Additional power (kW) per belt for speed ratio i 1,01 to 1,05 | 1,06 to 1,26 | 1,27 to 1,57 | >1,57 |
|---|---|---|---|---|---|---|---|---|---|---|---|---|---|---|---|---|---|---|---|---|---|
| Statically balanced | | **700** | 3.46 | 4.04 | 4.62 | 5.77 | 6.34 | 6.91 | 7.59 | 8.26 | 8.92 | 9.70 | 11.33 | 13.21 | 15.30 | 16.33 | 17.59 | 0.05 | 0.33 | 0.47 | 0.58 |
| | | **950** | 4.42 | 5.19 | 5.95 | 7.46 | 8.20 | 8.94 | 9.82 | 10.69 | 11.56 | 12.56 | 14.66 | 17.04 | 19.67 | 20.94 | 22.50 | 0.07 | 0.45 | 0.64 | 0.78 |
| | | **1450** | 6.09 | 7.20 | 8.29 | 10.44 | 11.49 | 12.53 | 13.76 | 14.96 | 16.15 | 17.50 | 20.30 | 23.36 | 26.59 | 28.08 | 29.83 | 0.11 | 0.69 | 0.97 | 1.20 |
| | | **2850** | 9.07 | 10.83 | 12.53 | 15.71 | 17.18 | 18.57 | 20.13 | 21.57 | 22.87 | 24.21 | 26.40 | 27.68 | | | | 0.21 | 1.35 | 1.92 | 2.35 |
| | | 100 | 0.66 | 0.76 | 0.85 | 1.04 | 1.14 | 1.23 | 1.35 | 1.46 | 1.57 | 1.70 | 1.98 | 2.30 | 2.66 | 2.84 | 3.07 | 0.01 | 0.05 | 0.07 | 0.08 |
| | | 200 | 1.21 | 1.39 | 1.57 | 1.94 | 2.12 | 2.30 | 2.51 | 2.73 | 2.94 | 3.19 | 3.72 | 4.33 | 5.02 | 5.36 | 5.79 | 0.01 | 0.09 | 0.13 | 0.16 |
| | | 300 | 1.71 | 1.97 | 2.24 | 2.77 | 3.03 | 3.29 | 3.61 | 3.92 | 4.23 | 4.59 | 5.36 | 6.24 | 7.25 | 7.74 | 8.36 | 0.02 | 0.14 | 0.20 | 0.25 |
| | | 400 | 2.17 | 2.52 | 2.87 | 3.56 | 3.91 | 4.25 | 4.66 | 5.06 | 5.47 | 5.94 | 6.93 | 8.08 | 9.38 | 10.03 | 10.82 | 0.03 | 0.19 | 0.27 | 0.33 |
| | | 500 | 2.62 | 3.05 | 3.48 | 4.32 | 4.75 | 5.16 | 5.66 | 6.16 | 6.66 | 7.23 | 8.45 | 9.85 | 11.43 | 12.22 | 13.18 | 0.04 | 0.24 | 0.34 | 0.41 |
| | 5 | 600 | 3.05 | 3.55 | 4.06 | 5.06 | 5.56 | 6.05 | 6.64 | 7.23 | 7.81 | 8.48 | 9.92 | 11.56 | 13.41 | 14.32 | 15.44 | 0.04 | 0.28 | 0.40 | 0.49 |
| | | 700 | 3.46 | 4.04 | 4.62 | 5.77 | 6.34 | 6.91 | 7.59 | 8.26 | 8.92 | 9.70 | 11.33 | 13.21 | 15.30 | 16.33 | 17.59 | 0.05 | 0.33 | 0.47 | 0.58 |
| | | 800 | 3.85 | 4.51 | 5.17 | 6.46 | 7.10 | 7.74 | 8.50 | 9.26 | 10.00 | 10.87 | 12.70 | 14.79 | 17.11 | 18.25 | 19.64 | 0.06 | 0.38 | 0.54 | 0.66 |
| | | 900 | 4.23 | 4.96 | 5.69 | 7.13 | 7.84 | 8.55 | 9.39 | 10.22 | 11.05 | 12.00 | 14.02 | 16.30 | 18.84 | 20.07 | 21.57 | 0.07 | 0.43 | 0.61 | 0.74 |
| | | 1000 | 4.60 | 5.40 | 6.20 | 7.78 | 8.56 | 9.33 | 10.25 | 11.16 | 12.06 | 13.10 | 15.28 | 17.75 | 20.47 | 21.79 | 23.39 | 0.07 | 0.47 | 0.67 | 0.82 |
| | | 1100 | 4.95 | 5.83 | 6.69 | 8.41 | 9.25 | 10.09 | 11.08 | 12.06 | 13.03 | 14.15 | 16.50 | 19.13 | 22.01 | 23.40 | 25.07 | 0.08 | 0.52 | 0.74 | 0.91 |
| | | 1200 | 5.29 | 6.24 | 7.17 | 9.01 | 9.92 | 10.82 | 11.88 | 12.93 | 13.97 | 15.16 | 17.65 | 20.44 | 23.46 | 24.89 | 26.62 | 0.09 | 0.57 | 0.81 | 0.99 |
| | 10 | 1300 | 5.62 | 6.63 | 7.63 | 9.60 | 10.57 | 11.52 | 12.65 | 13.77 | 14.87 | 16.13 | 18.76 | 21.67 | 24.79 | 26.26 | 28.02 | 0.10 | 0.62 | 0.87 | 1.07 |
| | | 1400 | 5.94 | 7.01 | 8.08 | 10.16 | 11.19 | 12.20 | 13.40 | 14.57 | 15.73 | 17.06 | 19.80 | 22.82 | 26.02 | 27.51 | 29.27 | 0.10 | 0.66 | 0.94 | 1.15 |
| | | 1500 | 6.24 | 7.38 | 8.51 | 10.71 | 11.79 | 12.85 | 14.11 | 15.34 | 16.55 | 17.93 | 20.78 | 23.88 | 27.12 | 28.62 | 30.35 | 0.11 | 0.71 | 1.01 | 1.24 |
| | | 1600 | 6.54 | 7.73 | 8.92 | 11.23 | 12.36 | 13.48 | 14.79 | 16.07 | 17.33 | 18.76 | 21.69 | 24.86 | 28.11 | 29.58 | 31.26 | 0.12 | 0.76 | 1.08 | 1.32 |
| | | 1700 | 6.82 | 8.07 | 9.31 | 11.73 | 12.91 | 14.07 | 15.44 | 16.77 | 18.07 | 19.54 | 22.54 | 25.74 | 28.96 | 30.39 | 31.99 | 0.12 | 0.81 | 1.14 | 1.40 |
| | | 1800 | 7.08 | 8.40 | 9.69 | 12.21 | 13.44 | 14.64 | 16.05 | 17.42 | 18.76 | 20.27 | 23.31 | 26.52 | 29.68 | 31.04 | 32.53 | 0.13 | 0.85 | 1.21 | 1.48 |
| | | 1900 | 7.34 | 8.71 | 10.05 | 12.67 | 13.93 | 15.18 | 16.63 | 18.04 | 19.40 | 20.94 | 24.02 | 27.20 | 30.25 | 31.53 | 32.86 | 0.14 | 0.90 | 1.28 | 1.57 |
| | 15 | 2000 | 7.58 | 9.00 | 10.39 | 13.10 | 14.41 | 15.68 | 17.17 | 18.61 | 20.00 | 21.56 | 24.64 | 27.77 | 30.68 | 31.84 | 32.99 | 0.15 | 0.95 | 1.34 | 1.65 |
| | | 2100 | 7.81 | 9.28 | 10.72 | 13.51 | 14.85 | 16.15 | 17.67 | 19.14 | 20.55 | 22.11 | 25.19 | 28.24 | 30.94 | 31.96 | 32.89 | 0.15 | 0.99 | 1.41 | 1.73 |
| | | 2200 | 8.02 | 9.54 | 11.03 | 13.89 | 15.26 | 16.59 | 18.14 | 19.62 | 21.04 | 22.61 | 25.65 | 28.58 | 31.05 | 31.90 | 32.57 | 0.16 | 1.04 | 1.48 | 1.81 |
| | | 2300 | 8.22 | 9.79 | 11.31 | 14.24 | 15.64 | 17.00 | 18.57 | 20.06 | 21.48 | 23.05 | 26.03 | 28.81 | 30.98 | 31.63 | | 0.17 | 1.09 | 1.55 | 1.90 |
| | | 2400 | 8.41 | 10.02 | 11.58 | 14.57 | 16.00 | 17.37 | 18.95 | 20.45 | 21.87 | 23.41 | 26.31 | 28.91 | 30.74 | 31.16 | | 0.18 | 1.14 | 1.61 | 1.98 |
| | | 2500 | 8.58 | 10.23 | 11.83 | 14.88 | 16.32 | 17.70 | 19.29 | 20.79 | 22.20 | 23.72 | 26.50 | 28.88 | 30.31 | | | 0.18 | 1.18 | 1.68 | 2.06 |
| | | 2600 | 8.74 | 10.42 | 12.06 | 15.15 | 16.61 | 18.00 | 19.59 | 21.08 | 22.47 | 23.95 | 26.60 | 28.71 | | | | 0.19 | 1.23 | 1.75 | 2.14 |
| | 20 | 2700 | 8.88 | 10.60 | 12.26 | 15.39 | 16.86 | 18.26 | 19.84 | 21.31 | 22.67 | 24.11 | 26.60 | 28.41 | | | | 0.20 | 1.28 | 1.82 | 2.23 |
| | | 2800 | 9.01 | 10.76 | 12.45 | 15.61 | 17.08 | 18.48 | 20.05 | 21.50 | 22.82 | 24.19 | 26.49 | 27.96 | | | | 0.21 | 1.33 | 1.88 | 2.31 |
| | | 2900 | 9.12 | 10.90 | 12.61 | 15.79 | 17.27 | 18.66 | 20.20 | 21.62 | 22.90 | 24.20 | 26.28 | 27.36 | | | | 0.21 | 1.37 | 1.95 | 2.39 |
| | | 3000 | 9.22 | 11.02 | 12.75 | 15.95 | 17.42 | 18.79 | 20.31 | 21.69 | 22.91 | 24.13 | 25.96 | | | | | 0.22 | 1.42 | 2.02 | 2.47 |
| | | 3100 | 9.30 | 11.12 | 12.86 | 16.07 | 17.53 | 18.88 | 20.37 | 21.70 | 22.85 | 23.98 | | | | | | 0.23 | 1.47 | 2.08 | 2.56 |
| | | 3200 | 9.36 | 11.21 | 12.96 | 16.16 | 17.60 | 18.93 | 20.38 | 21.64 | 22.72 | 23.74 | | | | | | 0.23 | 1.52 | 2.15 | 2.64 |
| | | 3300 | 9.41 | 11.27 | 13.02 | 16.21 | 17.63 | 18.93 | 20.33 | 21.53 | 22.52 | 23.42 | | | | | | 0.24 | 1.56 | 2.22 | 2.72 |
| | 25 | 3400 | 9.44 | 11.31 | 13.07 | 16.23 | 17.63 | 18.89 | 20.22 | 21.35 | 22.25 | 23.01 | | | | | | 0.25 | 1.61 | 2.29 | 2.80 |
| | | 3500 | 9.45 | 11.33 | 13.08 | 16.22 | 17.58 | 18.80 | 20.06 | 21.10 | 21.90 | 22.51 | | | | | | 0.26 | 1.66 | 2.35 | 2.89 |
| | | 3600 | 9.45 | 11.33 | 13.08 | 16.17 | 17.49 | 18.66 | 19.84 | 20.78 | | | | | | | | 0.26 | 1.71 | 2.42 | 2.97 |
| | | 3700 | 9.42 | 11.30 | 13.04 | 16.08 | 17.36 | 18.47 | 19.57 | 20.40 | | | | | | | | 0.27 | 1.75 | 2.49 | 3.05 |
| | | 3800 | 9.38 | 11.25 | 12.98 | 15.95 | 17.18 | 18.22 | 19.23 | 19.94 | | | | | | | | 0.28 | 1.80 | 2.55 | 3.13 |
| | | 3900 | 9.31 | 11.18 | 12.89 | 15.78 | 16.95 | 17.93 | 18.83 | 19.41 | | | | | | | | 0.29 | 1.85 | 2.62 | 3.21 |
| | 30 | 4000 | 9.23 | 11.09 | 12.77 | 15.58 | 16.68 | 17.58 | 18.36 | 18.81 | | | | | | | | 0.29 | 1.89 | 2.69 | 3.30 |
| | | 4100 | 9.13 | 10.97 | 12.62 | 15.33 | 16.36 | 17.17 | | | | | | | | | | 0.30 | 1.94 | 2.76 | 3.38 |
| | | 4200 | 9.01 | 10.82 | 12.44 | 15.04 | 16.00 | 16.71 | | | | | | | | | | 0.31 | 1.99 | 2.82 | 3.46 |
| | | 4300 | 8.86 | 10.65 | 12.23 | 14.71 | 15.58 | 16.19 | | | | | | | | | | 0.32 | 2.04 | 2.89 | 3.54 |
| | | 4400 | 8.70 | 10.46 | 11.99 | 14.33 | 15.11 | 15.62 | | | | | | | | | | 0.32 | 2.08 | 2.96 | 3.63 |
| | | 4500 | 8.51 | 10.24 | 11.72 | 13.92 | 14.60 | 14.98 | | | | | | | | | | 0.33 | 2.13 | 3.03 | 3.71 |
| | | 4600 | 8.30 | 9.99 | 11.42 | 13.45 | | | | | | | | | | | | 0.34 | 2.18 | 3.09 | 3.79 |
| | 35 | 4700 | 8.07 | 9.72 | 11.08 | 12.94 | | | | | | | | | | | | 0.34 | 2.23 | 3.16 | 3.87 |
| | | 4800 | 7.82 | 9.41 | 10.72 | 12.38 | | | | | | | | | | | | 0.35 | 2.27 | 3.23 | 3.96 |
| | | 4900 | 7.54 | 9.08 | 10.31 | 11.78 | | | | | | | | | | | | 0.36 | 2.32 | 3.29 | 4.04 |
| | | 5000 | 7.24 | 8.72 | 9.87 | 11.13 | | | | | | | | | | | | 0.37 | 2.37 | 3.36 | 4.12 |
| | | 5100 | 6.92 | 8.33 | 9.40 | | | | | | | | | | | | | 0.37 | 2.42 | 3.43 | 4.20 |
| | | 5200 | 6.57 | 7.91 | 8.89 | | | | | | | | | | | | | 0.38 | 2.46 | 3.50 | 4.29 |
| | | 5300 | 6.19 | 7.46 | 8.34 | | | | | | | | | | | | | 0.39 | 2.51 | 3.56 | 4.37 |
| | 40 | 5400 | 5.79 | 6.98 | 7.76 | | | | | | | | | | | | | 0.40 | 2.56 | 3.63 | 4.45 |
| | | 5500 | 5.37 | 6.47 | 7.14 | | | | | | | | | | | | | 0.40 | 2.61 | 3.70 | 4.53 |

Where v > 42 m/s, please consult our Applications Engineering Department

v (m/s)

Dynamically balanced (for details see DIN 2211)

Pulleys



Note: Pulley diameters shown are outside diameters for sections 5V/15N, 5V/15J.

# Power Ratings

## Section SPC

## Nominal Power Rating $P_N$ (kW) for $\beta$ = 180° and $L_d$ = 5600 mm

*Table 29*

| Pulleys | v (m/s) | $n_k$ (min$^{-1}$) | Datum diameter of small pulley $d_{dk}$ (mm) 224 | 250 | 280 | 300 | 315 | 335 | 355 | 375 | 400 | 450 | 500 | 560 | 630 | 710 | Additional power (kW) per belt for speed ratio i 1,01 to 1,05 | 1,06 to 1,26 | 1,27 to 1,57 | >1,57 |
|---|---|---|---|---|---|---|---|---|---|---|---|---|---|---|---|---|---|---|---|---|
| Statically balanced | | **700** | 10.46 | 13.11 | 16.13 | 18.11 | 19.58 | 21.52 | 23.44 | 25.34 | 27.68 | 32.24 | 36.64 | 41.70 | 47.28 | 53.19 | 0.14 | 0.90 | 1.28 | 1.57 |
| | | **950** | 13.27 | 16.71 | 20.58 | 23.11 | 24.97 | 27.42 | 29.82 | 32.18 | 35.05 | 40.55 | 45.70 | 51.38 | 57.27 | 62.91 | 0.19 | 1.22 | 1.73 | 2.13 |
| | | **1450** | 17.79 | 22.48 | 27.64 | 30.92 | 33.30 | 36.35 | 39.26 | 42.02 | 45.25 | 50.94 | 55.51 | 59.36 | 61.37 | | 0.29 | 1.86 | 2.65 | 3.25 |
| | | **2850** | 20.63 | 25.52 | 29.58 | 31.27 | 31.96 | | | | | | | | | | 0.57 | 3.67 | 5.20 | 6.38 |
| | | 50 | 1.08 | 1.31 | 1.58 | 1.75 | 1.89 | 2.06 | 2.23 | 2.41 | 2.62 | 3.05 | 3.48 | 3.99 | 4.58 | 5.25 | 0.01 | 0.06 | 0.09 | 0.11 |
| | | 100 | 1.99 | 2.44 | 2.94 | 3.28 | 3.53 | 3.87 | 4.20 | 4.53 | 4.95 | 5.77 | 6.58 | 7.56 | 8.68 | 9.95 | 0.02 | 0.13 | 0.18 | 0.22 |
| | | 200 | 3.64 | 4.49 | 5.46 | 6.11 | 6.59 | 7.22 | 7.86 | 8.49 | 9.28 | 10.84 | 12.38 | 14.22 | 16.34 | 18.73 | 0.04 | 0.26 | 0.37 | 0.45 |
| | | 300 | 5.16 | 6.40 | 7.81 | 8.75 | 9.44 | 10.37 | 11.29 | 12.21 | 13.34 | 15.60 | 17.83 | 20.47 | 23.50 | 26.90 | 0.06 | 0.39 | 0.55 | 0.67 |
| | | 350 | 5.89 | 7.31 | 8.94 | 10.01 | 10.82 | 11.88 | 12.94 | 13.99 | 15.30 | 17.88 | 20.44 | 23.45 | 26.90 | 30.77 | 0.07 | 0.45 | 0.64 | 0.78 |
| | 5 | 400 | 6.59 | 8.20 | 10.04 | 11.25 | 12.16 | 13.36 | 14.55 | 15.73 | 17.21 | 20.11 | 22.97 | 26.35 | 30.20 | 34.48 | 0.08 | 0.51 | 0.73 | 0.90 |
| | | 450 | 7.28 | 9.07 | 11.11 | 12.46 | 13.47 | 14.80 | 16.12 | 17.44 | 19.07 | 22.28 | 25.44 | 29.15 | 33.37 | 38.04 | 0.09 | 0.58 | 0.82 | 1.01 |
| | | 500 | 7.95 | 9.91 | 12.16 | 13.64 | 14.75 | 16.21 | 17.66 | 19.10 | 20.88 | 24.39 | 27.83 | 31.86 | 36.42 | 41.44 | 0.10 | 0.64 | 0.91 | 1.12 |
| | | 550 | 8.60 | 10.74 | 13.19 | 14.80 | 16.00 | 17.59 | 19.16 | 20.72 | 22.65 | 26.44 | 30.15 | 34.48 | 39.34 | 44.66 | 0.11 | 0.71 | 1.00 | 1.23 |
| | | 600 | 9.23 | 11.55 | 14.19 | 15.93 | 17.22 | 18.93 | 20.62 | 22.30 | 24.37 | 28.44 | 32.39 | 36.99 | 42.13 | 47.70 | 0.12 | 0.77 | 1.10 | 1.34 |
| | | 650 | 9.85 | 12.34 | 15.17 | 17.03 | 18.42 | 20.24 | 22.05 | 23.84 | 26.05 | 30.37 | 34.56 | 39.40 | 44.78 | 50.55 | 0.13 | 0.84 | 1.19 | 1.45 |
| | | 700 | 10.46 | 13.11 | 16.13 | 18.11 | 19.58 | 21.52 | 23.44 | 25.34 | 27.68 | 32.24 | 36.64 | 41.70 | 47.28 | 53.19 | 0.14 | 0.90 | 1.28 | 1.57 |
| | | 750 | 11.05 | 13.87 | 17.06 | 19.16 | 20.72 | 22.77 | 24.80 | 26.80 | 29.26 | 34.04 | 38.64 | 43.89 | 49.62 | 55.61 | 0.15 | 0.96 | 1.37 | 1.68 |
| | | 800 | 11.63 | 14.60 | 17.98 | 20.19 | 21.83 | 23.99 | 26.11 | 28.21 | 30.78 | 35.77 | 40.54 | 45.95 | 51.80 | 57.81 | 0.16 | 1.03 | 1.46 | 1.79 |
| | 10 | 850 | 12.19 | 15.32 | 18.87 | 21.19 | 22.91 | 25.17 | 27.39 | 29.58 | 32.26 | 37.44 | 42.36 | 47.89 | 53.80 | 59.77 | 0.17 | 1.09 | 1.55 | 1.90 |
| | | 900 | 12.74 | 16.02 | 19.74 | 22.16 | 23.96 | 26.31 | 28.63 | 30.90 | 33.68 | 39.03 | 44.08 | 49.71 | 55.63 | 61.47 | 0.18 | 1.16 | 1.64 | 2.01 |
| | | 950 | 13.27 | 16.71 | 20.58 | 23.11 | 24.97 | 27.42 | 29.82 | 32.18 | 35.05 | 40.55 | 45.70 | 51.38 | 57.27 | 62.91 | 0.19 | 1.22 | 1.73 | 2.13 |
| | | 1000 | 13.79 | 17.37 | 21.40 | 24.03 | 25.96 | 28.50 | 30.98 | 33.41 | 36.36 | 41.99 | 47.21 | 52.92 | 58.71 | 64.08 | 0.20 | 1.29 | 1.83 | 2.24 |
| | | 1050 | 14.30 | 18.02 | 22.20 | 24.91 | 26.92 | 29.53 | 32.09 | 34.58 | 37.61 | 43.34 | 48.62 | 54.30 | 59.94 | 64.95 | 0.21 | 1.35 | 1.92 | 2.35 |
| | | 1100 | 14.79 | 18.64 | 22.97 | 25.77 | 27.84 | 30.53 | 33.16 | 35.71 | 38.80 | 44.62 | 49.92 | 55.54 | 60.96 | 65.53 | 0.22 | 1.41 | 2.01 | 2.46 |
| | | 1150 | 15.26 | 19.25 | 23.72 | 26.61 | 28.73 | 31.49 | 34.18 | 36.78 | 39.93 | 45.81 | 51.10 | 56.61 | 61.76 | 65.79 | 0.23 | 1.48 | 2.10 | 2.57 |
| | | 1200 | 15.72 | 19.84 | 24.44 | 27.41 | 29.58 | 32.41 | 35.15 | 37.80 | 40.99 | 46.90 | 52.16 | 57.52 | 62.33 | 65.72 | 0.24 | 1.54 | 2.19 | 2.69 |
| | 15 | 1250 | 16.17 | 20.41 | 25.13 | 28.17 | 30.40 | 33.28 | 36.07 | 38.76 | 41.98 | 47.91 | 53.10 | 58.25 | 62.65 | 65.31 | 0.25 | 1.61 | 2.28 | 2.80 |
| | | 1300 | 16.60 | 20.96 | 25.80 | 28.91 | 31.18 | 34.12 | 36.95 | 39.67 | 42.91 | 48.82 | 53.90 | 58.81 | 62.73 | | 0.26 | 1.67 | 2.37 | 2.91 |
| | | 1350 | 17.01 | 21.49 | 26.44 | 29.62 | 31.93 | 34.91 | 37.77 | 40.52 | 43.77 | 49.63 | 54.58 | 59.19 | 62.55 | | 0.27 | 1.74 | 2.46 | 3.02 |
| | | 1400 | 17.41 | 21.99 | 27.06 | 30.29 | 32.63 | 35.65 | 38.54 | 41.30 | 44.55 | 50.34 | 55.12 | 59.37 | 62.10 | | 0.28 | 1.80 | 2.56 | 3.13 |
| | | 1450 | 17.79 | 22.48 | 27.64 | 30.92 | 33.30 | 36.35 | 39.26 | 42.02 | 45.25 | 50.94 | 55.51 | 59.36 | 61.37 | | 0.29 | 1.86 | 2.65 | 3.25 |
| | | 1500 | 18.16 | 22.94 | 28.20 | 31.53 | 33.93 | 37.00 | 39.92 | 42.68 | 45.88 | 51.44 | 55.76 | 59.15 | | | 0.30 | 1.93 | 2.74 | 3.36 |
| | | 1550 | 18.51 | 23.39 | 28.72 | 32.09 | 34.52 | 37.61 | 40.53 | 43.27 | 46.43 | 51.83 | 55.86 | | | | 0.31 | 1.99 | 2.83 | 3.47 |
| | | 1600 | 18.84 | 23.81 | 29.22 | 32.62 | 35.06 | 38.16 | 41.07 | 43.79 | 46.90 | 52.10 | 55.81 | | | | 0.32 | 2.06 | 2.92 | 3.58 |
| | | 1650 | 19.16 | 24.20 | 29.68 | 33.11 | 35.56 | 38.66 | 41.56 | 44.24 | 47.29 | 52.25 | 55.59 | | | | 0.33 | 2.12 | 3.01 | 3.69 |
| | 20 | 1700 | 19.45 | 24.58 | 30.11 | 33.56 | 36.02 | 39.11 | 41.98 | 44.62 | 47.58 | 52.28 | 55.21 | | | | 0.34 | 2.19 | 3.10 | 3.80 |
| | | 1750 | 19.73 | 24.92 | 30.51 | 33.98 | 36.43 | 39.51 | 42.35 | 44.93 | 47.79 | 52.19 | 54.67 | | | | 0.35 | 2.25 | 3.19 | 3.92 |
| | | 1800 | 19.99 | 25.25 | 30.88 | 34.35 | 36.80 | 39.85 | 42.64 | 45.16 | 47.91 | 51.97 | | | | | 0.36 | 2.31 | 3.29 | 4.03 |
| | | 1850 | 20.24 | 25.55 | 31.21 | 34.68 | 37.12 | 40.14 | 42.87 | 45.32 | 47.94 | 51.62 | | | | | 0.37 | 2.38 | 3.38 | 4.14 |
| | | 1900 | 20.46 | 25.82 | 31.51 | 34.97 | 37.39 | 40.37 | 43.04 | 45.39 | 47.87 | 51.14 | | | | | 0.38 | 2.44 | 3.47 | 4.25 |
| | | 1950 | 20.66 | 26.07 | 31.77 | 35.22 | 37.61 | 40.54 | 43.13 | 45.39 | 47.70 | 50.52 | | | | | 0.39 | 2.51 | 3.56 | 4.36 |
| | | 2000 | 20.85 | 26.29 | 31.99 | 35.42 | 37.79 | 40.65 | 43.16 | 45.30 | 47.44 | 49.76 | | | | | 0.40 | 2.57 | 3.65 | 4.48 |
| | | 2050 | 21.01 | 26.49 | 32.18 | 35.58 | 37.91 | 40.69 | 43.11 | 45.13 | 47.07 | | | | | | 0.41 | 2.64 | 3.74 | 4.59 |
| | 25 | 2100 | 21.16 | 26.66 | 32.34 | 35.69 | 37.97 | 40.68 | 42.99 | 44.87 | 46.60 | | | | | | 0.42 | 2.70 | 3.83 | 4.70 |
| | | 2150 | 21.28 | 26.79 | 32.45 | 35.76 | 37.99 | 40.60 | 42.79 | 44.52 | 46.02 | | | | | | 0.43 | 2.77 | 3.92 | 4.81 |
| | | 2200 | 21.38 | 26.91 | 32.52 | 35.78 | 37.95 | 40.46 | 42.51 | 44.08 | 45.33 | | | | | | 0.44 | 2.83 | 4.02 | 4.92 |
| | | 2250 | 21.46 | 26.99 | 32.56 | 35.75 | 37.85 | 40.25 | 42.16 | 43.55 | 44.53 | | | | | | 0.45 | 2.89 | 4.11 | 5.04 |
| | | 2300 | 21.52 | 27.04 | 32.55 | 35.67 | 37.70 | 39.97 | 41.73 | | | | | | | | 0.46 | 2.96 | 4.20 | 5.15 |
| | | 2350 | 21.56 | 27.06 | 32.50 | 35.54 | 37.49 | 39.63 | 41.21 | | | | | | | | 0.47 | 3.02 | 4.29 | 5.26 |
| | | 2400 | 21.57 | 27.05 | 32.41 | 35.36 | 37.22 | 39.21 | 40.61 | | | | | | | | 0.48 | 3.09 | 4.38 | 5.37 |
| | | 2450 | 21.57 | 27.02 | 32.28 | 35.13 | 36.89 | 38.72 | 39.93 | | | | | | | | 0.49 | 3.15 | 4.47 | 5.48 |
| | | 2500 | 21.53 | 26.94 | 32.10 | 34.84 | 36.50 | 38.16 | 39.16 | | | | | | | | 0.50 | 3.22 | 4.56 | 5.60 |
| | 30 | 2550 | 21.48 | 26.84 | 31.88 | 34.50 | 36.05 | | | | | | | | | | 0.51 | 3.28 | 4.66 | 5.71 |
| | | 2600 | 21.40 | 26.71 | 31.62 | 34.10 | 35.53 | | | | | | | | | | 0.52 | 3.34 | 4.75 | 5.82 |
| | | 2650 | 21.30 | 26.54 | 31.30 | 33.65 | 34.95 | | | | | | | | | | 0.53 | 3.41 | 4.84 | 5.93 |
| | | 2700 | 21.17 | 26.33 | 30.94 | 33.14 | 34.30 | | | | | | | | | | 0.54 | 3.47 | 4.93 | 6.04 |
| | | 2750 | 21.02 | 26.10 | 30.54 | 32.58 | 33.59 | | | | | | | | | | 0.55 | 3.54 | 5.02 | 6.16 |
| | | 2800 | 20.84 | 25.83 | 30.08 | | | | | | | | | | | | 0.56 | 3.60 | 5.11 | 6.27 |
| | | 2850 | 20.63 | 25.52 | 29.58 | | | | | | | | | | | | 0.57 | 3.67 | 5.20 | 6.38 |
| | | 2900 | 20.40 | 25.18 | 29.03 | | | | | | | | | | | | 0.58 | 3.73 | 5.29 | 6.49 |
| | 35 | 2950 | 20.14 | 24.80 | 28.42 | | | | | | | | | | | | 0.59 | 3.79 | 5.39 | 6.60 |
| | | 3000 | 19.86 | 24.38 | 27.77 | | | | | | | | | | | | 0.60 | 3.86 | 5.48 | 6.71 |
| | | 3050 | 19.55 | 23.93 | 27.06 | | | | | | | | | | | | 0.61 | 3.92 | 5.57 | 6.83 |
| | | 3100 | 19.21 | 23.43 | 26.30 | | | | | | | | | | | | 0.62 | 3.99 | 5.66 | 6.94 |
| | | 3150 | 18.84 | 22.90 | 25.49 | | | | | | | | | | | | 0.63 | 4.05 | 5.75 | 7.05 |
| | | 3200 | 18.44 | 22.33 | 24.62 | | | | | | | | | | | | 0.64 | 4.12 | 5.84 | 7.16 |
| | | 3250 | 18.02 | 21.72 | 23.69 | | | | | | | | | | | | 0.65 | 4.18 | 5.93 | 7.27 |
| | | 3300 | 17.56 | 21.07 | | | | | | | | | | | | | 0.66 | 4.24 | 6.02 | 7.39 |
| | | 3350 | 17.08 | 20.38 | | | | | | | | | | | | | 0.67 | 4.31 | 6.12 | 7.50 |
| | 40 | 3400 | 16.56 | 19.65 | | | | | | | | | | | | | 0.68 | 4.37 | 6.21 | 7.61 |
| | | 3450 | 16.02 | 18.87 | | | | | | | | | | | | | 0.69 | 4.44 | 6.30 | 7.72 |
| | | 3500 | 15.44 | 18.05 | | | | | | | | | | | | | 0.70 | 4.50 | 6.39 | 7.83 |

Where v > 42 m/s, please consult our Applications Engineering Department

v (m/s)

Dynamically balanced (for details see DIN 2211)

Pulleys

# Power Ratings

## Section 8V/25N, 8V/25J

## Nominal Power Rating $P_N$ (kW) for β = 180° and 8V 2500/6350 mm $L_a$

*Table 30*

| Pulleys | v (m/s) | $n_k$ (min$^{-1}$) | Datum diameter of small pulley $d_{dk}$ (mm) 335 | 355 | 375 | 425 | 450 | 475 | 500 | 530 | 560 | 600 | 630 | 710 | 800 | Additional power (kW) per belt for speed ratio i 1,01 to 1,05 | 1,06 to 1,26 | 1,27 to 1,57 | >1,57 |
|---|---|---|---|---|---|---|---|---|---|---|---|---|---|---|---|---|---|---|---|
| Statically balanced | | **700** | 25.67 | 28.61 | 31.52 | 38.62 | 42.08 | 45.49 | 48.82 | 52.74 | 56.57 | 61.51 | 65.09 | 74.10 | 83.23 | 0.28 | 1.83 | 2.60 | 3.18 |
| | | **950** | 32.09 | 35.77 | 39.37 | 48.03 | 52.17 | 56.17 | 60.03 | 64.47 | 68.68 | 73.95 | 77.62 | 86.13 | 93.33 | 0.38 | 2.48 | 3.52 | 4.32 |
| | | **1450** | 40.47 | 44.90 | 49.10 | 58.51 | 62.60 | 66.25 | 69.44 | 72.63 | 75.10 | 77.18 | 77.79 | 0.59 | 3.79 | 5.38 | 6.60 | | |
| | | 50 | 2.63 | 2.89 | 3.16 | 3.82 | 4.15 | 4.48 | 4.80 | 5.19 | 5.58 | 6.10 | 6.48 | 7.51 | 8.65 | 0.02 | 0.13 | 0.19 | 0.23 |
| | | 100 | 4.87 | 5.38 | 5.89 | 7.15 | 7.78 | 8.41 | 9.03 | 9.78 | 10.52 | 11.51 | 12.24 | 14.19 | 16.37 | 0.04 | 0.26 | 0.37 | 0.45 |
| | | 150 | 6.97 | 7.71 | 8.46 | 10.30 | 11.22 | 12.13 | 13.03 | 14.12 | 15.20 | 16.63 | 17.70 | 20.53 | 23.68 | 0.06 | 0.39 | 0.56 | 0.68 |
| | | 200 | 8.97 | 9.94 | 10.91 | 13.31 | 14.51 | 15.69 | 16.88 | 18.29 | 19.69 | 21.56 | 22.94 | 26.61 | 30.68 | 0.08 | 0.52 | 0.74 | 0.91 |
| | | 250 | 10.89 | 12.08 | 13.27 | 16.22 | 17.68 | 19.14 | 20.59 | 22.31 | 24.03 | 26.30 | 28.00 | 32.46 | 37.40 | 0.10 | 0.65 | 0.93 | 1.14 |
| | 5 | 300 | 12.74 | 14.15 | 15.56 | 19.04 | 20.76 | 22.47 | 24.18 | 26.21 | 28.22 | 30.89 | 32.87 | 38.09 | 43.84 | 0.12 | 0.78 | 1.11 | 1.36 |
| | | 350 | 14.54 | 16.16 | 17.78 | 21.77 | 23.74 | 25.71 | 27.66 | 29.98 | 32.28 | 35.32 | 37.57 | 43.49 | 49.98 | 0.14 | 0.91 | 1.30 | 1.59 |
| | | 400 | 16.28 | 18.11 | 19.93 | 24.42 | 26.64 | 28.84 | 31.02 | 33.62 | 36.19 | 39.58 | 42.10 | 48.66 | 55.82 | 0.16 | 1.05 | 1.48 | 1.82 |
| | | 450 | 17.97 | 20.00 | 22.01 | 26.99 | 29.44 | 31.87 | 34.28 | 37.14 | 39.97 | 43.69 | 46.44 | 53.59 | 61.33 | 0.18 | 1.18 | 1.67 | 2.05 |
| | | 500 | 19.61 | 21.83 | 24.04 | 29.48 | 32.16 | 34.81 | 37.43 | 40.54 | 43.60 | 47.62 | 50.59 | 58.27 | 66.50 | 0.20 | 1.31 | 1.86 | 2.27 |
| | | 550 | 21.20 | 23.61 | 26.00 | 31.89 | 34.78 | 37.64 | 40.46 | 43.80 | 47.08 | 51.38 | 54.54 | 62.67 | 71.30 | 0.22 | 1.44 | 2.04 | 2.50 |
| | 10 | 600 | 22.74 | 25.33 | 27.90 | 34.22 | 37.31 | 40.36 | 43.37 | 46.92 | 50.41 | 54.95 | 58.28 | 66.79 | 75.70 | 0.24 | 1.57 | 2.23 | 2.73 |
| | | 650 | 24.23 | 27.00 | 29.74 | 36.46 | 39.75 | 42.98 | 46.16 | 49.91 | 53.57 | 58.33 | 61.80 | 70.61 | 79.69 | 0.26 | 1.70 | 2.41 | 2.96 |
| | | 700 | 25.67 | 28.61 | 31.52 | 38.62 | 42.08 | 45.49 | 48.82 | 52.74 | 56.57 | 61.51 | 65.09 | 74.10 | 83.23 | 0.28 | 1.83 | 2.60 | 3.18 |
| | | 750 | 27.06 | 30.16 | 33.23 | 40.69 | 44.32 | 47.87 | 51.35 | 55.42 | 59.38 | 64.46 | 68.13 | 77.26 | 86.31 | 0.30 | 1.96 | 2.78 | 3.41 |
| | | 800 | 28.40 | 31.66 | 34.87 | 42.67 | 46.45 | 50.14 | 53.74 | 57.94 | 62.01 | 67.20 | 70.92 | 80.06 | 88.88 | 0.32 | 2.09 | 2.97 | 3.64 |
| | 15 | 850 | 29.68 | 33.09 | 36.44 | 44.56 | 48.47 | 52.28 | 55.99 | 60.30 | 64.44 | 69.70 | 73.44 | 82.49 | 90.92 | 0.34 | 2.22 | 3.15 | 3.87 |
| | | 900 | 30.91 | 34.46 | 37.94 | 46.34 | 50.38 | 54.29 | 58.09 | 62.47 | 66.67 | 71.95 | 75.67 | 84.52 | 92.42 | 0.36 | 2.35 | 3.34 | 4.09 |
| | | 950 | 32.09 | 35.77 | 39.37 | 48.03 | 52.17 | 56.17 | 60.03 | 64.47 | 68.68 | 73.95 | 77.62 | 86.13 | 93.33 | 0.38 | 2.48 | 3.52 | 4.32 |
| | | 1000 | 33.21 | 37.01 | 40.72 | 49.61 | 53.84 | 57.90 | 61.81 | 66.27 | 70.48 | 75.68 | 79.25 | 87.31 | 93.63 | 0.40 | 2.61 | 3.71 | 4.55 |
| | | 1050 | 34.27 | 38.18 | 42.00 | 51.09 | 55.38 | 59.49 | 63.42 | 67.87 | 72.04 | 77.12 | 80.56 | 88.04 | 93.28 | 0.42 | 2.74 | 3.90 | 4.78 |
| | 20 | 1100 | 35.27 | 39.29 | 43.19 | 52.45 | 56.79 | 60.93 | 64.85 | 69.27 | 73.36 | 78.28 | 81.53 | 88.30 | 92.28 | 0.44 | 2.88 | 4.08 | 5.00 |
| | | 1150 | 36.21 | 40.32 | 44.30 | 53.69 | 58.06 | 62.20 | 66.11 | 70.46 | 74.44 | 79.13 | 82.16 | 88.06 | 90.56 | 0.46 | 3.01 | 4.27 | 5.23 |
| | | 1200 | 37.09 | 41.28 | 45.33 | 54.82 | 59.20 | 63.32 | 67.17 | 71.42 | 75.25 | 79.66 | 82.42 | 87.31 | 88.14 | 0.49 | 3.14 | 4.45 | 5.46 |
| | | 1250 | 37.90 | 42.16 | 46.27 | 55.82 | 60.19 | 64.27 | 68.04 | 72.16 | 75.80 | 79.87 | 82.31 | 86.03 | | 0.51 | 3.27 | 4.64 | 5.69 |
| | | 1300 | 38.65 | 42.97 | 47.12 | 56.69 | 61.03 | 65.04 | 68.71 | 72.65 | 76.06 | 79.74 | 81.80 | | | 0.53 | 3.40 | 4.82 | 5.91 |
| | | 1350 | 39.33 | 43.70 | 47.88 | 57.44 | 61.71 | 65.63 | 69.17 | 72.90 | 76.04 | 79.25 | 80.89 | | | 0.55 | 3.53 | 5.01 | 6.14 |
| | 25 | 1400 | 39.93 | 44.34 | 48.54 | 58.04 | 62.24 | 66.04 | 69.42 | 72.90 | 75.72 | | 79.56 | | | 0.57 | 3.66 | 5.19 | 6.37 |
| | | 1450 | 40.47 | 44.90 | 49.10 | 58.51 | 62.60 | 66.25 | 69.44 | 72.63 | 75.10 | | 77.79 | | | 0.59 | 3.79 | 5.38 | 6.60 |
| | | 1500 | 40.93 | 45.37 | 49.56 | 58.84 | 62.80 | 66.27 | 69.24 | | | | | | | 0.61 | 3.92 | 5.57 | 6.82 |
| | | 1550 | 41.31 | 45.75 | 49.91 | 59.01 | 62.81 | 66.08 | 68.80 | | | | | | | 0.63 | 4.05 | 5.75 | 7.05 |
| | | 1600 | 41.62 | 46.04 | 50.16 | 59.04 | 62.65 | 65.69 | 68.11 | | | | | | | 0.65 | 4.18 | 5.94 | 7.28 |
| | | 1650 | 41.85 | 46.24 | 50.30 | 58.90 | 62.31 | 65.08 | 67.18 | | | | | | | 0.67 | 4.31 | 6.12 | 7.51 |
| | 30 | 1700 | 41.99 | 46.34 | 50.33 | 58.61 | 61.77 | 64.25 | 65.99 | | | | | | | 0.69 | 4.44 | 6.31 | 7.73 |
| | | 1750 | 42.05 | 46.35 | 50.24 | 58.15 | 61.05 | 63.19 | 64.54 | | | | | | | 0.71 | 4.57 | 6.49 | 7.96 |
| | | 1800 | 42.03 | 46.25 | 50.04 | 57.52 | 60.12 | | | | | | | | | 0.73 | 4.70 | 6.68 | 8.19 |
| | | 1850 | 41.92 | 46.05 | 49.71 | 56.72 | 58.98 | | | | | | | | | 0.75 | 4.84 | 6.86 | 8.42 |
| | | 1900 | 41.72 | 45.74 | 49.26 | 55.74 | 57.64 | | | | | | | | | 0.77 | 4.97 | 7.05 | 8.64 |
| | 35 | 1950 | 41.42 | 45.32 | 48.69 | 54.58 | 56.08 | | | | | | | | | 0.79 | 5.10 | 7.23 | 8.87 |
| | | 2000 | 41.04 | 44.79 | 47.98 | 53.23 | 54.31 | | | | | | | | | 0.81 | 5.23 | 7.42 | 9.10 |
| | | 2050 | 40.55 | 44.15 | 47.14 | | | | | | | | | | | 0.83 | 5.36 | 7.61 | 9.33 |
| | | 2100 | 39.97 | 43.40 | 46.16 | | | | | | | | | | | 0.85 | 5.49 | 7.79 | 9.55 |
| | | 2150 | 39.29 | 42.52 | 45.05 | | | | | | | | | | | 0.87 | 5.62 | 7.98 | 9.78 |
| | | 2200 | 38.50 | 41.53 | 43.79 | | | | | | | | | | | 0.89 | 5.75 | 8.16 | 10.01 |
| | | 2250 | 37.62 | 40.41 | 42.40 | | | | | | | | | | | 0.91 | 5.88 | 8.35 | 10.23 |
| | 40 | | | | | | | | | | | | | | | | | | v (m/s) |
| Dynamically balanced (for details see USA Standard RMA/MPTA) | | | | | | | | | | | | | | | | | | | Pulleys |

Where v > 42 m/s, please consult our Applications Engineering Department

optibelt
Power Transmission

# Power Ratings

## optibelt *RED POWER II* Section SPZ, 3V/9N, 3V/9J

## Nominal Power Rating $P_N$ (kW) for $\beta$ = 180° and $L_d$ = 1600 mm

*Table 31*

| Pulleys | v (m/s) | $n_k$ (min$^{-1}$) | Datum diameter of small pulley $d_{dk}$ (mm) 63 | 71 | 80 | 85 | 90 | 95 | 100 | 112 | 125 | 132 | 140 | 150 | 160 | 180 | 200 | Additional power (kW) per belt for speed ratio i 1,01 to 1,05 | 1,06 to 1,26 | 1,27 to 1,57 | >1,57 |
|---|---|---|---|---|---|---|---|---|---|---|---|---|---|---|---|---|---|---|---|---|---|
| Statically balanced | | **700** | 0.60 | 0.80 | 1.02 | 1.14 | 1.26 | 1.38 | 1.50 | 1.78 | 2.08 | 2.25 | 2.43 | 2.66 | 2.89 | 3.35 | 3.80 | 0.01 | 0.06 | 0.09 | 0.11 |
| | | **950** | 0.77 | 1.03 | 1.32 | 1.48 | 1.64 | 1.80 | 1.96 | 2.33 | 2.74 | 2.95 | 3.20 | 3.50 | 3.80 | 4.40 | 4.99 | 0.01 | 0.09 | 0.12 | 0.15 |
| | | **1450** | 1.08 | 1.47 | 1.89 | 2.13 | 2.36 | 2.60 | 2.83 | 3.38 | 3.96 | 4.28 | 4.63 | 5.07 | 5.50 | 6.36 | 7.19 | 0.02 | 0.13 | 0.19 | 0.23 |
| | | **2850** | 1.80 | 2.50 | 3.28 | 3.70 | 4.12 | 4.53 | 4.94 | 5.90 | 6.90 | 7.43 | 8.01 | 8.72 | 9.41 | 10.70 | 11.88 | 0.04 | 0.26 | 0.37 | 0.46 |
| | | 100 | 0.11 | 0.15 | 0.18 | 0.20 | 0.22 | 0.24 | 0.26 | 0.31 | 0.36 | 0.38 | 0.41 | 0.45 | 0.49 | 0.56 | 0.64 | 0.00 | 0.01 | 0.01 | 0.02 |
| | | 200 | 0.21 | 0.27 | 0.34 | 0.38 | 0.41 | 0.45 | 0.49 | 0.58 | 0.67 | 0.72 | 0.78 | 0.85 | 0.92 | 1.07 | 1.21 | 0.00 | 0.02 | 0.03 | 0.03 |
| | | 300 | 0.30 | 0.38 | 0.48 | 0.54 | 0.59 | 0.65 | 0.70 | 0.83 | 0.97 | 1.04 | 1.13 | 1.24 | 1.34 | 1.55 | 1.76 | 0.00 | 0.03 | 0.04 | 0.05 |
| | | 400 | 0.38 | 0.49 | 0.62 | 0.69 | 0.77 | 0.84 | 0.91 | 1.08 | 1.26 | 1.36 | 1.47 | 1.61 | 1.74 | 2.02 | 2.29 | 0.01 | 0.04 | 0.05 | 0.06 |
| | | 500 | 0.45 | 0.60 | 0.76 | 0.85 | 0.93 | 1.02 | 1.11 | 1.32 | 1.54 | 1.66 | 1.80 | 1.97 | 2.13 | 2.47 | 2.80 | 0.01 | 0.05 | 0.07 | 0.08 |
| | | 600 | 0.53 | 0.70 | 0.89 | 0.99 | 1.10 | 1.20 | 1.30 | 1.55 | 1.82 | 1.96 | 2.12 | 2.32 | 2.52 | 2.91 | 3.30 | 0.01 | 0.06 | 0.08 | 0.10 |
| | | 700 | 0.60 | 0.80 | 1.02 | 1.14 | 1.26 | 1.38 | 1.50 | 1.78 | 2.08 | 2.25 | 2.43 | 2.66 | 2.89 | 3.35 | 3.80 | 0.01 | 0.06 | 0.09 | 0.11 |
| | | 800 | 0.67 | 0.89 | 1.14 | 1.28 | 1.41 | 1.55 | 1.68 | 2.00 | 2.35 | 2.53 | 2.74 | 3.00 | 3.26 | 3.77 | 4.28 | 0.01 | 0.07 | 0.11 | 0.13 |
| | | 900 | 0.74 | 0.99 | 1.26 | 1.41 | 1.57 | 1.72 | 1.87 | 2.22 | 2.61 | 2.81 | 3.05 | 3.34 | 3.62 | 4.19 | 4.75 | 0.01 | 0.08 | 0.12 | 0.15 |
| | | 1000 | 0.80 | 1.08 | 1.38 | 1.55 | 1.72 | 1.88 | 2.05 | 2.44 | 2.86 | 3.09 | 3.35 | 3.66 | 3.98 | 4.60 | 5.22 | 0.01 | 0.09 | 0.13 | 0.16 |
| | | 1100 | 0.87 | 1.17 | 1.50 | 1.68 | 1.86 | 2.05 | 2.23 | 2.66 | 3.12 | 3.36 | 3.64 | 3.99 | 4.33 | 5.01 | 5.67 | 0.02 | 0.10 | 0.14 | 0.18 |
| | | 1200 | 0.93 | 1.25 | 1.61 | 1.81 | 2.01 | 2.21 | 2.40 | 2.87 | 3.36 | 3.63 | 3.93 | 4.30 | 4.67 | 5.40 | 6.12 | 0.02 | 0.11 | 0.16 | 0.19 |
| | | 1300 | 0.99 | 1.34 | 1.73 | 1.94 | 2.15 | 2.36 | 2.57 | 3.07 | 3.61 | 3.89 | 4.21 | 4.61 | 5.01 | 5.79 | 6.55 | 0.02 | 0.12 | 0.17 | 0.21 |
| | | 1400 | 1.05 | 1.43 | 1.84 | 2.07 | 2.29 | 2.52 | 2.74 | 3.28 | 3.85 | 4.15 | 4.49 | 4.92 | 5.34 | 6.17 | 6.98 | 0.02 | 0.13 | 0.18 | 0.23 |
| | 5 | 1500 | 1.11 | 1.51 | 1.95 | 2.19 | 2.43 | 2.67 | 2.91 | 3.48 | 4.08 | 4.40 | 4.77 | 5.22 | 5.67 | 6.54 | 7.40 | 0.02 | 0.14 | 0.20 | 0.24 |
| | | 1600 | 1.17 | 1.59 | 2.06 | 2.31 | 2.57 | 2.82 | 3.08 | 3.68 | 4.31 | 4.65 | 5.04 | 5.52 | 5.99 | 6.91 | 7.80 | 0.02 | 0.15 | 0.21 | 0.26 |
| | | 1700 | 1.23 | 1.67 | 2.16 | 2.44 | 2.70 | 2.97 | 3.24 | 3.87 | 4.54 | 4.90 | 5.31 | 5.81 | 6.30 | 7.26 | 8.20 | 0.02 | 0.16 | 0.22 | 0.27 |
| | | 1800 | 1.28 | 1.75 | 2.27 | 2.55 | 2.84 | 3.12 | 3.40 | 4.06 | 4.77 | 5.14 | 5.57 | 6.09 | 6.61 | 7.61 | 8.58 | 0.03 | 0.17 | 0.24 | 0.29 |
| | | 1900 | 1.34 | 1.83 | 2.37 | 2.67 | 2.97 | 3.26 | 3.56 | 4.25 | 4.99 | 5.38 | 5.82 | 6.37 | 6.91 | 7.95 | 8.96 | 0.03 | 0.18 | 0.25 | 0.31 |
| | | 2000 | 1.39 | 1.90 | 2.47 | 2.79 | 3.10 | 3.41 | 3.71 | 4.44 | 5.21 | 5.62 | 6.08 | 6.64 | 7.20 | 8.28 | 9.32 | 0.03 | 0.19 | 0.26 | 0.32 |
| | | 2100 | 1.44 | 1.98 | 2.57 | 2.90 | 3.22 | 3.55 | 3.87 | 4.62 | 5.42 | 5.85 | 6.32 | 6.91 | 7.49 | 8.60 | 9.67 | 0.03 | 0.19 | 0.28 | 0.34 |
| | | 2200 | 1.49 | 2.05 | 2.67 | 3.01 | 3.35 | 3.68 | 4.02 | 4.80 | 5.63 | 6.07 | 6.57 | 7.17 | 7.77 | 8.91 | 10.01 | 0.03 | 0.20 | 0.29 | 0.35 |
| | | 2300 | 1.54 | 2.13 | 2.77 | 3.12 | 3.47 | 3.82 | 4.16 | 4.98 | 5.84 | 6.29 | 6.80 | 7.43 | 8.04 | 9.22 | 10.33 | 0.03 | 0.21 | 0.30 | 0.37 |
| | | 2400 | 1.59 | 2.20 | 2.87 | 3.23 | 3.59 | 3.95 | 4.31 | 5.15 | 6.04 | 6.51 | 7.03 | 7.68 | 8.31 | 9.51 | 10.64 | 0.03 | 0.22 | 0.32 | 0.39 |
| | | 2500 | 1.64 | 2.27 | 2.96 | 3.34 | 3.71 | 4.09 | 4.45 | 5.32 | 6.24 | 6.72 | 7.26 | 7.92 | 8.56 | 9.79 | 10.94 | 0.04 | 0.23 | 0.33 | 0.40 |
| | | 2600 | 1.69 | 2.34 | 3.05 | 3.44 | 3.83 | 4.22 | 4.60 | 5.49 | 6.43 | 6.93 | 7.48 | 8.16 | 8.82 | 10.07 | 11.23 | 0.04 | 0.24 | 0.34 | 0.42 |
| | | 2700 | 1.74 | 2.40 | 3.14 | 3.55 | 3.95 | 4.34 | 4.73 | 5.66 | 6.62 | 7.13 | 7.70 | 8.39 | 9.06 | 10.33 | 11.50 | 0.04 | 0.25 | 0.35 | 0.44 |
| | | 2800 | 1.78 | 2.47 | 3.23 | 3.65 | 4.06 | 4.47 | 4.87 | 5.82 | 6.81 | 7.33 | 7.91 | 8.61 | 9.29 | 10.58 | 11.76 | 0.04 | 0.26 | 0.37 | 0.45 |
| | | 2900 | 1.83 | 2.54 | 3.32 | 3.75 | 4.17 | 4.59 | 5.01 | 5.98 | 6.99 | 7.52 | 8.11 | 8.83 | 9.52 | 10.82 | 12.00 | 0.04 | 0.27 | 0.38 | 0.47 |
| | 10 | 3000 | 1.87 | 2.60 | 3.41 | 3.85 | 4.28 | 4.71 | 5.14 | 6.13 | 7.17 | 7.71 | 8.31 | 9.04 | 9.74 | 11.05 | 12.23 | 0.04 | 0.28 | 0.39 | 0.48 |
| | | 3100 | 1.91 | 2.66 | 3.49 | 3.94 | 4.39 | 4.83 | 5.27 | 6.28 | 7.34 | 7.89 | 8.50 | 9.24 | 9.95 | 11.27 | 12.44 | 0.04 | 0.29 | 0.41 | 0.50 |
| | | 3200 | 1.95 | 2.73 | 3.58 | 4.04 | 4.50 | 4.95 | 5.39 | 6.43 | 7.51 | 8.07 | 8.69 | 9.44 | 10.15 | 11.47 | 12.64 | 0.05 | 0.30 | 0.42 | 0.52 |
| | | 3300 | 1.99 | 2.79 | 3.66 | 4.13 | 4.60 | 5.06 | 5.52 | 6.58 | 7.67 | 8.24 | 8.87 | 9.63 | 10.35 | 11.67 | 12.81 | 0.05 | 0.31 | 0.43 | 0.53 |
| | | 3400 | 2.03 | 2.85 | 3.74 | 4.22 | 4.70 | 5.17 | 5.64 | 6.72 | 7.83 | 8.41 | 9.05 | 9.81 | 10.53 | 11.85 | 12.98 | 0.05 | 0.31 | 0.45 | 0.55 |
| | | 3500 | 2.07 | 2.90 | 3.82 | 4.31 | 4.80 | 5.28 | 5.75 | 6.85 | 7.99 | 8.57 | 9.21 | 9.98 | 10.70 | 12.01 | 13.12 | 0.05 | 0.32 | 0.46 | 0.56 |
| | | 3600 | 2.11 | 2.96 | 3.89 | 4.40 | 4.90 | 5.39 | 5.87 | 6.99 | 8.14 | 8.73 | 9.38 | 10.15 | 10.87 | 12.17 | 13.25 | 0.05 | 0.33 | 0.47 | 0.58 |
| | | 3700 | 2.15 | 3.02 | 3.97 | 4.49 | 4.99 | 5.49 | 5.98 | 7.12 | 8.28 | 8.88 | 9.53 | 10.30 | 11.02 | 12.31 | 13.36 | 0.05 | 0.34 | 0.49 | 0.60 |
| | | 3800 | 2.18 | 3.07 | 4.04 | 4.57 | 5.09 | 5.60 | 6.09 | 7.24 | 8.42 | 9.02 | 9.68 | 10.45 | 11.17 | 12.43 | 13.45 | 0.05 | 0.35 | 0.50 | 0.61 |
| | | 3900 | 2.22 | 3.13 | 4.12 | 4.65 | 5.18 | 5.70 | 6.20 | 7.37 | 8.56 | 9.16 | 9.82 | 10.59 | 11.31 | 12.55 | 13.52 | 0.06 | 0.36 | 0.51 | 0.63 |
| | | 4000 | 2.25 | 3.18 | 4.19 | 4.73 | 5.27 | 5.79 | 6.30 | 7.49 | 8.68 | 9.29 | 9.95 | 10.72 | 11.43 | 12.65 | 13.57 | 0.06 | 0.37 | 0.53 | 0.64 |
| | | 4100 | 2.29 | 3.23 | 4.26 | 4.81 | 5.35 | 5.89 | 6.41 | 7.60 | 8.81 | 9.42 | 10.08 | 10.84 | 11.54 | 12.73 | 13.60 | 0.06 | 0.38 | 0.54 | 0.66 |
| | | 4200 | 2.32 | 3.28 | 4.32 | 4.89 | 5.44 | 5.98 | 6.50 | 7.71 | 8.93 | 9.54 | 10.20 | 10.96 | 11.65 | 12.80 | 13.61 | 0.06 | 0.39 | 0.55 | 0.68 |
| | | 4300 | 2.35 | 3.33 | 4.39 | 4.96 | 5.52 | 6.07 | 6.60 | 7.82 | 9.04 | 9.65 | 10.31 | 11.06 | 11.74 | 12.85 | 13.60 | 0.06 | 0.40 | 0.57 | 0.69 |
| | | 4400 | 2.38 | 3.37 | 4.45 | 5.03 | 5.60 | 6.15 | 6.69 | 7.92 | 9.15 | 9.76 | 10.41 | 11.16 | 11.82 | 12.89 | 13.57 | 0.06 | 0.41 | 0.58 | 0.71 |
| | | 4500 | 2.41 | 3.42 | 4.51 | 5.10 | 5.68 | 6.24 | 6.78 | 8.02 | 9.25 | 9.86 | 10.51 | 11.24 | 11.89 | 12.91 | 13.51 | 0.06 | 0.42 | 0.59 | 0.73 |
| | 15 | 4600 | 2.44 | 3.46 | 4.58 | 5.17 | 5.75 | 6.32 | 6.87 | 8.11 | 9.34 | 9.95 | 10.59 | 11.32 | 11.95 | 12.91 | | 0.07 | 0.43 | 0.60 | 0.74 |
| | | 4700 | 2.47 | 3.51 | 4.63 | 5.24 | 5.83 | 6.40 | 6.95 | 8.20 | 9.43 | 10.04 | 10.67 | 11.38 | 12.00 | 12.90 | | 0.07 | 0.44 | 0.62 | 0.76 |
| | | 4800 | 2.49 | 3.55 | 4.69 | 5.30 | 5.90 | 6.47 | 7.03 | 8.29 | 9.52 | 10.12 | 10.74 | 11.44 | 12.03 | 12.87 | | 0.07 | 0.44 | 0.63 | 0.77 |
| | | 4900 | 2.52 | 3.59 | 4.75 | 5.36 | 5.96 | 6.54 | 7.11 | 8.37 | 9.59 | 10.19 | 10.81 | 11.49 | 12.05 | 12.82 | | 0.07 | 0.45 | 0.64 | 0.79 |
| | | 5000 | 2.54 | 3.63 | 4.80 | 5.42 | 6.03 | 6.61 | 7.18 | 8.45 | 9.67 | 10.25 | 10.86 | 11.52 | 12.06 | 12.76 | | 0.07 | 0.46 | 0.66 | 0.81 |
| | | 5100 | 2.57 | 3.67 | 4.85 | 5.48 | 6.09 | 6.68 | 7.25 | 8.52 | 9.73 | 10.31 | 10.91 | 11.54 | 12.06 | | | 0.07 | 0.47 | 0.67 | 0.82 |
| | | 5200 | 2.59 | 3.70 | 4.90 | 5.53 | 6.15 | 6.74 | 7.31 | 8.58 | 9.79 | 10.36 | 10.94 | 11.56 | 12.04 | | | 0.07 | 0.48 | 0.68 | 0.84 |
| | | 5300 | 2.61 | 3.74 | 4.95 | 5.59 | 6.21 | 6.80 | 7.38 | 8.64 | 9.84 | 10.40 | 10.97 | 11.56 | 12.01 | | | 0.08 | 0.49 | 0.70 | 0.85 |
| | | 5400 | 2.63 | 3.77 | 4.99 | 5.64 | 6.26 | 6.86 | 7.43 | 8.70 | 9.89 | 10.44 | 10.99 | 11.55 | 11.97 | | | 0.08 | 0.50 | 0.71 | 0.87 |
| | | 5500 | 2.65 | 3.80 | 5.03 | 5.69 | 6.31 | 6.91 | 7.49 | 8.75 | 9.93 | 10.47 | 11.00 | 11.53 | | | | 0.08 | 0.51 | 0.72 | 0.89 |
| | | 5600 | 2.67 | 3.83 | 5.08 | 5.73 | 6.36 | 6.97 | 7.54 | 8.80 | 9.96 | 10.48 | 11.00 | 11.50 | | | | 0.08 | 0.52 | 0.74 | 0.90 |
| | | 5800 | 2.70 | 3.89 | 5.15 | 5.82 | 6.45 | 7.06 | 7.63 | 8.88 | 10.00 | 10.50 | 10.97 | 11.40 | | | | 0.08 | 0.54 | 0.76 | 0.93 |
| | 20 | 6000 | 2.73 | 3.94 | 5.22 | 5.89 | 6.53 | 7.14 | 7.71 | 8.94 | 10.01 | 10.48 | 10.90 | | | | | 0.09 | 0.56 | 0.79 | 0.97 |
| | | 6200 | 2.75 | 3.99 | 5.28 | 5.96 | 6.60 | 7.20 | 7.77 | 8.97 | 10.00 | 10.42 | 10.79 | | | | | 0.09 | 0.57 | 0.81 | 1.00 |
| | | 6400 | 2.77 | 4.02 | 5.33 | 6.01 | 6.65 | 7.25 | 7.82 | 8.99 | 9.95 | 10.33 | 10.63 | | | | | 0.09 | 0.59 | 0.84 | 1.03 |
| | | 6600 | 2.78 | 4.06 | 5.38 | 6.05 | 6.69 | 7.29 | 7.84 | 8.98 | 9.88 | | | | | | | 0.09 | 0.61 | 0.87 | 1.06 |
| | | 6800 | 2.79 | 4.08 | 5.41 | 6.09 | 6.72 | 7.31 | 7.86 | 8.95 | 9.77 | | | | | | | 0.10 | 0.63 | 0.89 | 1.10 |
| | | 7000 | 2.80 | 4.10 | 5.43 | 6.11 | 6.74 | 7.32 | 7.85 | 8.89 | 9.62 | | | | | | | 0.10 | 0.65 | 0.92 | 1.13 |
| | | 7200 | 2.80 | 4.11 | 5.45 | 6.12 | 6.74 | 7.31 | 7.83 | 8.81 | 9.45 | | | | | | | 0.10 | 0.67 | 0.95 | 1.16 |
| | 25 | 7400 | 2.79 | 4.11 | 5.45 | 6.12 | 6.73 | 7.29 | 7.78 | 8.70 | | | | | | | | 0.11 | 0.69 | 0.97 | 1.19 |
| | | 7600 | 2.78 | 4.11 | 5.45 | 6.11 | 6.71 | 7.25 | 7.72 | 8.57 | | | | | | | | 0.11 | 0.70 | 1.00 | 1.22 |
| | | 7800 | 2.77 | 4.10 | 5.43 | 6.08 | 6.67 | 7.19 | 7.64 | 8.41 | | | | | | | | 0.11 | 0.72 | 1.03 | 1.26 |
| | | 8000 | 2.75 | 4.09 | 5.41 | 6.05 | 6.62 | 7.12 | 7.54 | 8.22 | | | | | | | | 0.11 | 0.74 | 1.05 | 1.29 |
| | | 8200 | 2.72 | 4.06 | 5.37 | 6.00 | 6.55 | 7.03 | 7.42 | | | | | | | | | 0.12 | 0.76 | 1.08 | 1.32 |
| | | 8400 | 2.69 | 4.03 | 5.32 | 5.94 | 6.47 | 6.92 | 7.28 | | | | | | | | | 0.12 | 0.78 | 1.10 | 1.35 |
| | | | | 30 | 35 | | | 40 | | | | | | | | | | | | | |
| Dynamically balanced (for details see DIN 2211) | | | | | | | | | | | | | | | | | | | | | |

Where v > 42 m/s, please consult our Applications Engineering Department

v (m/s)

Pulleys

Note: Pulley diameters shown are outside diameters for sections 3V/9N, 3V/9J.

# Power Ratings

## optibelt *RED POWER II* Section SPA

## Nominal Power Rating $P_N$ (kW) for $\beta$ = 180° and $L_d$ = 2500 mm

*Table 32*

| Pulleys | v (m/s) | $n_k$ (min$^{-1}$) | Datum diameter of small pulley $d_{dk}$ (mm) 90 | 100 | 112 | 118 | 125 | 132 | 140 | 150 | 160 | 180 | 200 | 224 | 250 | 280 | 315 | Additional power (kW) per belt for speed ratio i 1,01 to 1,05 | 1,06 to 1,26 | 1,27 to 1,57 | >1,57 |
|---|---|---|---|---|---|---|---|---|---|---|---|---|---|---|---|---|---|---|---|---|---|
| Statically balanced | | **700** | 1.34 | 1.73 | 2.20 | 2.43 | 2.70 | 2.97 | 3.28 | 3.66 | 4.03 | 4.78 | 5.53 | 6.41 | 7.35 | 8.42 | 9.66 | 0.02 | 0.15 | 0.21 | 0.26 |
| | | **950** | 1.72 | 2.24 | 2.86 | 3.16 | 3.52 | 3.88 | 4.28 | 4.78 | 5.28 | 6.27 | 7.24 | 8.40 | 9.63 | 11.03 | 12.62 | 0.03 | 0.20 | 0.29 | 0.36 |
| | | **1450** | 2.40 | 3.16 | 4.07 | 4.52 | 5.04 | 5.56 | 6.15 | 6.88 | 7.61 | 9.03 | 10.43 | 12.08 | 13.81 | 15.75 | 17.93 | 0.05 | 0.31 | 0.44 | 0.54 |
| | | **2850** | 3.91 | 5.29 | 6.91 | 7.71 | 8.63 | 9.53 | 10.54 | 11.79 | 13.00 | 15.33 | 17.52 | 19.96 | 22.35 | 24.75 | 27.01 | 0.09 | 0.61 | 0.87 | 1.07 |
| | | 100 | 0.26 | 0.32 | 0.40 | 0.44 | 0.48 | 0.52 | 0.57 | 0.64 | 0.70 | 0.82 | 0.94 | 1.09 | 1.24 | 1.42 | 1.63 | 0.00 | 0.02 | 0.03 | 0.04 |
| | | 200 | 0.47 | 0.59 | 0.74 | 0.81 | 0.89 | 0.98 | 1.07 | 1.19 | 1.31 | 1.54 | 1.78 | 2.06 | 2.35 | 2.70 | 3.09 | 0.01 | 0.04 | 0.06 | 0.07 |
| | | 300 | 0.66 | 0.84 | 1.05 | 1.16 | 1.28 | 1.40 | 1.54 | 1.72 | 1.89 | 2.23 | 2.57 | 2.98 | 3.41 | 3.91 | 4.49 | 0.01 | 0.06 | 0.09 | 0.11 |
| | | 400 | 0.84 | 1.08 | 1.36 | 1.49 | 1.65 | 1.81 | 2.00 | 2.22 | 2.45 | 2.90 | 3.34 | 3.87 | 4.44 | 5.08 | 5.83 | 0.01 | 0.09 | 0.12 | 0.15 |
| | | 500 | 1.02 | 1.30 | 1.65 | 1.82 | 2.01 | 2.21 | 2.43 | 2.71 | 2.99 | 3.54 | 4.09 | 4.73 | 5.43 | 6.23 | 7.14 | 0.02 | 0.11 | 0.15 | 0.19 |
| | | 600 | 1.18 | 1.52 | 1.93 | 2.13 | 2.36 | 2.60 | 2.86 | 3.19 | 3.52 | 4.17 | 4.81 | 5.58 | 6.40 | 7.34 | 8.42 | 0.02 | 0.13 | 0.18 | 0.22 |
| | | 700 | 1.34 | 1.73 | 2.20 | 2.43 | 2.70 | 2.97 | 3.28 | 3.66 | 4.03 | 4.78 | 5.53 | 6.41 | 7.35 | 8.42 | 9.66 | 0.02 | 0.15 | 0.21 | 0.26 |
| | | 800 | 1.50 | 1.94 | 2.47 | 2.73 | 3.04 | 3.34 | 3.68 | 4.11 | 4.54 | 5.39 | 6.22 | 7.22 | 8.28 | 9.48 | 10.87 | 0.03 | 0.17 | 0.24 | 0.30 |
| | | 900 | 1.64 | 2.14 | 2.73 | 3.02 | 3.36 | 3.70 | 4.08 | 4.56 | 5.04 | 5.98 | 6.91 | 8.01 | 9.18 | 10.52 | 12.05 | 0.03 | 0.19 | 0.27 | 0.34 |
| | 5 | 1000 | 1.79 | 2.34 | 2.98 | 3.31 | 3.68 | 4.05 | 4.48 | 5.00 | 5.52 | 6.56 | 7.58 | 8.78 | 10.07 | 11.53 | 13.19 | 0.03 | 0.22 | 0.31 | 0.37 |
| | | 1100 | 1.93 | 2.53 | 3.23 | 3.59 | 3.99 | 4.40 | 4.86 | 5.43 | 6.00 | 7.12 | 8.23 | 9.54 | 10.94 | 12.51 | 14.31 | 0.04 | 0.24 | 0.34 | 0.41 |
| | | 1200 | 2.07 | 2.71 | 3.48 | 3.86 | 4.30 | 4.74 | 5.24 | 5.86 | 6.47 | 7.68 | 8.88 | 10.29 | 11.78 | 13.47 | 15.39 | 0.04 | 0.26 | 0.37 | 0.45 |
| | | 1300 | 2.20 | 2.90 | 3.72 | 4.13 | 4.60 | 5.07 | 5.61 | 6.27 | 6.93 | 8.23 | 9.51 | 11.02 | 12.61 | 14.41 | 16.43 | 0.04 | 0.28 | 0.40 | 0.49 |
| | | 1400 | 2.33 | 3.07 | 3.96 | 4.39 | 4.90 | 5.40 | 5.97 | 6.68 | 7.38 | 8.77 | 10.13 | 11.73 | 13.42 | 15.31 | 17.44 | 0.05 | 0.30 | 0.43 | 0.52 |
| | | 1500 | 2.46 | 3.25 | 4.19 | 4.65 | 5.19 | 5.72 | 6.33 | 7.08 | 7.83 | 9.30 | 10.73 | 12.42 | 14.20 | 16.19 | 18.41 | 0.05 | 0.32 | 0.46 | 0.56 |
| | | 1600 | 2.59 | 3.42 | 4.41 | 4.91 | 5.48 | 6.04 | 6.68 | 7.48 | 8.26 | 9.81 | 11.33 | 13.10 | 14.96 | 17.04 | 19.34 | 0.05 | 0.34 | 0.49 | 0.60 |
| | | 1700 | 2.71 | 3.59 | 4.64 | 5.16 | 5.76 | 6.35 | 7.03 | 7.86 | 8.69 | 10.32 | 11.91 | 13.76 | 15.70 | 17.86 | 20.24 | 0.06 | 0.37 | 0.52 | 0.64 |
| | | 1800 | 2.83 | 3.76 | 4.86 | 5.40 | 6.03 | 6.66 | 7.37 | 8.25 | 9.11 | 10.81 | 12.47 | 14.41 | 16.42 | 18.64 | 21.08 | 0.06 | 0.39 | 0.55 | 0.67 |
| | | 1900 | 2.94 | 3.92 | 5.07 | 5.64 | 6.30 | 6.96 | 7.70 | 8.62 | 9.52 | 11.30 | 13.03 | 15.03 | 17.11 | 19.40 | 21.89 | 0.06 | 0.41 | 0.58 | 0.71 |
| | | 2000 | 3.06 | 4.08 | 5.28 | 5.88 | 6.57 | 7.25 | 8.03 | 8.98 | 9.93 | 11.77 | 13.56 | 15.64 | 17.78 | 20.12 | 22.65 | 0.07 | 0.43 | 0.61 | 0.75 |
| | | 2100 | 3.17 | 4.23 | 5.49 | 6.11 | 6.83 | 7.54 | 8.35 | 9.34 | 10.32 | 12.24 | 14.09 | 16.22 | 18.43 | 20.81 | 23.36 | 0.07 | 0.45 | 0.64 | 0.79 |
| | | 2200 | 3.27 | 4.38 | 5.69 | 6.34 | 7.09 | 7.83 | 8.66 | 9.69 | 10.71 | 12.69 | 14.60 | 16.79 | 19.04 | 21.46 | 24.02 | 0.07 | 0.47 | 0.67 | 0.82 |
| | | 2300 | 3.38 | 4.53 | 5.89 | 6.56 | 7.34 | 8.10 | 8.97 | 10.04 | 11.09 | 13.13 | 15.09 | 17.34 | 19.63 | 22.08 | 24.64 | 0.08 | 0.50 | 0.70 | 0.86 |
| | | 2400 | 3.48 | 4.68 | 6.09 | 6.78 | 7.58 | 8.38 | 9.27 | 10.37 | 11.45 | 13.55 | 15.57 | 17.87 | 20.19 | 22.65 | 25.20 | 0.08 | 0.52 | 0.73 | 0.90 |
| | 10 | 2500 | 3.58 | 4.82 | 6.28 | 7.00 | 7.82 | 8.64 | 9.57 | 10.70 | 11.81 | 13.97 | 16.03 | 18.37 | 20.73 | 23.19 | 25.70 | 0.08 | 0.54 | 0.76 | 0.94 |
| | | 2600 | 3.68 | 4.96 | 6.46 | 7.21 | 8.06 | 8.90 | 9.85 | 11.02 | 12.16 | 14.37 | 16.48 | 18.85 | 21.23 | 23.69 | 26.15 | 0.09 | 0.56 | 0.79 | 0.97 |
| | | 2700 | 3.77 | 5.09 | 6.65 | 7.41 | 8.29 | 9.16 | 10.14 | 11.33 | 12.50 | 14.76 | 16.91 | 19.31 | 21.70 | 24.15 | 26.54 | 0.09 | 0.58 | 0.82 | 1.01 |
| | | 2800 | 3.87 | 5.23 | 6.83 | 7.61 | 8.52 | 9.41 | 10.41 | 11.64 | 12.84 | 15.14 | 17.32 | 19.75 | 22.14 | 24.56 | 26.87 | 0.09 | 0.60 | 0.86 | 1.05 |
| | | 2900 | 3.96 | 5.36 | 7.00 | 7.81 | 8.74 | 9.65 | 10.68 | 11.93 | 13.16 | 15.51 | 17.72 | 20.17 | 22.55 | 24.93 | 27.13 | 0.10 | 0.62 | 0.89 | 1.09 |
| | | 3000 | 4.04 | 5.48 | 7.17 | 8.00 | 8.95 | 9.89 | 10.94 | 12.22 | 13.47 | 15.86 | 18.09 | 20.55 | 22.93 | 25.25 | | 0.10 | 0.65 | 0.92 | 1.12 |
| | | 3100 | 4.13 | 5.61 | 7.34 | 8.19 | 9.16 | 10.12 | 11.19 | 12.50 | 13.77 | 16.20 | 18.45 | 20.92 | 23.27 | | | 0.10 | 0.67 | 0.95 | 1.16 |
| | | 3200 | 4.21 | 5.73 | 7.50 | 8.37 | 9.36 | 10.34 | 11.44 | 12.77 | 14.06 | 16.52 | 18.79 | 21.26 | 23.57 | | | 0.11 | 0.69 | 0.98 | 1.20 |
| | | 3300 | 4.29 | 5.84 | 7.66 | 8.54 | 9.56 | 10.56 | 11.67 | 13.03 | 14.34 | 16.83 | 19.11 | 21.57 | 23.84 | | | 0.11 | 0.71 | 1.01 | 1.24 |
| | | 3400 | 4.37 | 5.96 | 7.81 | 8.72 | 9.75 | 10.77 | 11.90 | 13.28 | 14.61 | 17.12 | 19.41 | 21.85 | 24.08 | | | 0.11 | 0.73 | 1.04 | 1.27 |
| | 15 | 3500 | 4.44 | 6.07 | 7.96 | 8.88 | 9.94 | 10.97 | 12.13 | 13.52 | 14.87 | 17.40 | 19.69 | 22.11 | 24.27 | | | 0.12 | 0.75 | 1.07 | 1.31 |
| | | 3600 | 4.51 | 6.17 | 8.10 | 9.04 | 10.12 | 11.17 | 12.34 | 13.76 | 15.12 | 17.66 | 19.95 | 22.34 | | | | 0.12 | 0.77 | 1.10 | 1.35 |
| | | 3700 | 4.58 | 6.27 | 8.24 | 9.20 | 10.29 | 11.36 | 12.55 | 13.98 | 15.35 | 17.91 | 20.19 | 22.53 | | | | 0.12 | 0.80 | 1.13 | 1.39 |
| | | 3800 | 4.65 | 6.37 | 8.38 | 9.35 | 10.46 | 11.55 | 12.75 | 14.19 | 15.58 | 18.14 | 20.41 | 22.70 | | | | 0.13 | 0.82 | 1.16 | 1.42 |
| | | 3900 | 4.71 | 6.47 | 8.51 | 9.50 | 10.62 | 11.72 | 12.94 | 14.40 | 15.79 | 18.35 | 20.60 | 22.84 | | | | 0.13 | 0.84 | 1.19 | 1.46 |
| | | 4000 | 4.77 | 6.56 | 8.63 | 9.64 | 10.78 | 11.89 | 13.12 | 14.59 | 15.99 | 18.55 | 20.77 | 22.95 | | | | 0.13 | 0.86 | 1.22 | 1.50 |
| | | 4100 | 4.83 | 6.65 | 8.76 | 9.77 | 10.93 | 12.05 | 13.29 | 14.77 | 16.18 | 18.73 | 20.92 | | | | | 0.14 | 0.88 | 1.25 | 1.54 |
| | 20 | 4200 | 4.88 | 6.74 | 8.87 | 9.90 | 11.07 | 12.21 | 13.46 | 14.95 | 16.35 | 18.89 | 21.05 | | | | | 0.14 | 0.90 | 1.28 | 1.57 |
| | | 4300 | 4.94 | 6.82 | 8.98 | 10.03 | 11.21 | 12.35 | 13.61 | 15.11 | 16.52 | 19.04 | 21.15 | | | | | 0.14 | 0.93 | 1.31 | 1.61 |
| | | 4400 | 4.99 | 6.89 | 9.09 | 10.15 | 11.34 | 12.49 | 13.76 | 15.26 | 16.66 | 19.17 | 21.22 | | | | | 0.15 | 0.95 | 1.34 | 1.65 |
| | | 4500 | 5.03 | 6.97 | 9.19 | 10.26 | 11.46 | 12.63 | 13.90 | 15.40 | 16.80 | 19.27 | 21.28 | | | | | 0.15 | 0.97 | 1.37 | 1.69 |
| | | 4600 | 5.07 | 7.04 | 9.29 | 10.36 | 11.58 | 12.75 | 14.03 | 15.53 | 16.92 | 19.36 | | | | | | 0.15 | 0.99 | 1.41 | 1.72 |
| | | 4700 | 5.12 | 7.11 | 9.38 | 10.46 | 11.69 | 12.86 | 14.14 | 15.65 | 17.03 | 19.43 | | | | | | 0.16 | 1.01 | 1.44 | 1.76 |
| | | 4800 | 5.15 | 7.17 | 9.46 | 10.56 | 11.79 | 12.97 | 14.25 | 15.75 | 17.13 | 19.48 | | | | | | 0.16 | 1.03 | 1.47 | 1.80 |
| | | 4900 | 5.19 | 7.23 | 9.54 | 10.65 | 11.89 | 13.07 | 14.35 | 15.84 | 17.21 | 19.52 | | | | | | 0.16 | 1.05 | 1.50 | 1.84 |
| | | 5000 | 5.22 | 7.28 | 9.62 | 10.73 | 11.97 | 13.16 | 14.44 | 15.92 | 17.27 | 19.53 | | | | | | 0.17 | 1.08 | 1.53 | 1.87 |
| | | 5100 | 5.25 | 7.33 | 9.69 | 10.81 | 12.05 | 13.24 | 14.52 | 15.99 | 17.32 | | | | | | | 0.17 | 1.10 | 1.56 | 1.91 |
| | | 5200 | 5.27 | 7.38 | 9.75 | 10.87 | 12.13 | 13.31 | 14.59 | 16.05 | 17.36 | | | | | | | 0.17 | 1.12 | 1.59 | 1.95 |
| | 25 | 5300 | 5.29 | 7.42 | 9.81 | 10.94 | 12.19 | 13.38 | 14.65 | 16.09 | 17.38 | | | | | | | 0.18 | 1.14 | 1.62 | 1.99 |
| | | 5400 | 5.31 | 7.46 | 9.86 | 10.99 | 12.25 | 13.43 | 14.69 | 16.12 | 17.38 | | | | | | | 0.18 | 1.16 | 1.65 | 2.02 |
| | | 5500 | 5.33 | 7.49 | 9.91 | 11.04 | 12.30 | 13.48 | 14.73 | 16.14 | 17.37 | | | | | | | 0.18 | 1.18 | 1.68 | 2.06 |
| | | 5600 | 5.34 | 7.52 | 9.95 | 11.09 | 12.34 | 13.51 | 14.76 | 16.15 | | | | | | | | 0.19 | 1.21 | 1.71 | 2.10 |
| | | 5700 | 5.35 | 7.54 | 9.98 | 11.12 | 12.37 | 13.54 | 14.77 | 16.14 | | | | | | | | 0.19 | 1.23 | 1.74 | 2.13 |
| | | 5800 | 5.35 | 7.56 | 10.01 | 11.15 | 12.40 | 13.56 | 14.77 | 16.11 | | | | | | | | 0.19 | 1.25 | 1.77 | 2.17 |
| | | 5900 | 5.36 | 7.58 | 10.04 | 11.17 | 12.42 | 13.57 | 14.76 | 16.08 | | | | | | | | 0.20 | 1.27 | 1.80 | 2.21 |
| | | 6000 | 5.36 | 7.59 | 10.05 | 11.19 | 12.42 | 13.56 | 14.75 | 16.02 | | | | | | | | 0.20 | 1.29 | 1.83 | 2.25 |
| | | 6100 | 5.35 | 7.60 | 10.06 | 11.19 | 12.42 | 13.55 | 14.71 | | | | | | | | | 0.20 | 1.31 | 1.86 | 2.28 |
| | | 6200 | 5.34 | 7.60 | 10.06 | 11.19 | 12.41 | 13.53 | 14.67 | | | | | | | | | 0.21 | 1.33 | 1.89 | 2.32 |
| | 30 | 6300 | 5.33 | 7.60 | 10.06 | 11.19 | 12.40 | 13.50 | 14.61 | | | | | | | | | 0.21 | 1.36 | 1.92 | 2.36 |
| | | 6400 | 5.31 | 7.59 | 10.05 | 11.17 | 12.37 | 13.46 | 14.55 | | | | | | | | | 0.21 | 1.38 | 1.96 | 2.40 |
| | | 6500 | 5.30 | 7.58 | 10.04 | 11.15 | 12.33 | 13.40 | 14.47 | | | | | | | | | 0.22 | 1.40 | 1.99 | 2.43 |
| | | 6600 | 5.27 | 7.56 | 10.01 | 11.12 | 12.29 | | | | | | | | | | | 0.22 | 1.42 | 2.02 | 2.47 |
| | | 6700 | 5.25 | 7.54 | 9.98 | 11.08 | 12.24 | | | | | | | | | | | 0.22 | 1.44 | 2.05 | 2.51 |
| | | 6800 | 5.22 | 7.51 | 9.95 | 11.03 | 12.17 | | | | | | | | | | | 0.23 | 1.46 | 2.08 | 2.55 |
| | | 6900 | 5.18 | 7.48 | 9.90 | 10.98 | 12.10 | | | | | | | | | | | 0.23 | 1.49 | 2.11 | 2.58 |
| | | 7000 | 5.14 | 7.44 | 9.85 | 10.91 | 12.02 | | | | | | | | | | | 0.23 | 1.51 | 2.14 | 2.62 |
| | | | 35 | 40 | | | | | | | | | | | | | | | | | |
| | | | Dynamically balanced (for details see DIN 2211) | | | | | | | | | | | | | | | v (m/s) | | | |
| | | | | | | | | | | | | | | | | | | Pulleys | | | |

Where v > 42 m/s, please consult our Applications Engineering Department

RED POWER II

# Power Ratings

## optibelt *RED POWER II* Section SPB, 5V/15N, 5V/15J
## Nominal Power Rating $P_N$ (kW) for $\beta$ = 180° and $L_d$ = 3550 mm

*Table 33*

| Pulleys | v (m/s) | $n_k$ (min$^{-1}$) | Datum diameter of small pulley $d_{dk}$ (mm) 140 | 150 | 160 | 180 | 190 | 200 | 212 | 224 | 236 | 250 | 280 | 315 | 355 | 375 | 400 | Additional power (kW) per belt for speed ratio i 1,01 to 1,05 | 1,06 to 1,26 | 1,27 to 1,57 | >1,57 |
|---|---|---|---|---|---|---|---|---|---|---|---|---|---|---|---|---|---|---|---|---|---|
| Statically balanced | | **700** | 4.02 | 4.64 | 5.27 | 6.50 | 7.12 | 7.73 | 8.46 | 9.18 | 9.91 | 10.74 | 12.52 | 14.57 | 16.88 | 18.02 | 19.44 | 0.05 | 0.33 | 0.47 | 0.58 |
| | | **950** | 5.19 | 6.02 | 6.84 | 8.48 | 9.29 | 10.09 | 11.05 | 12.01 | 12.96 | 14.05 | 16.38 | 19.05 | 22.04 | 23.51 | 25.32 | 0.07 | 0.45 | 0.64 | 0.78 |
| | | **1450** | 7.33 | 8.55 | 9.75 | 12.12 | 13.30 | 14.46 | 15.84 | 17.21 | 18.57 | 20.13 | 23.41 | 27.12 | 31.19 | 33.16 | 35.54 | 0.11 | 0.69 | 0.97 | 1.20 |
| | | **2850** | 12.11 | 14.21 | 16.28 | 20.29 | 22.22 | 24.11 | 26.31 | 28.43 | 30.48 | 32.78 | 37.30 | 41.87 | | | | 0.21 | 1.35 | 1.92 | 2.35 |
| | | 100 | 0.74 | 0.84 | 0.94 | 1.14 | 1.24 | 1.34 | 1.46 | 1.58 | 1.70 | 1.84 | 2.13 | 2.47 | 2.86 | 3.05 | 3.29 | 0.01 | 0.05 | 0.07 | 0.08 |
| | | 200 | 1.36 | 1.56 | 1.75 | 2.14 | 2.33 | 2.52 | 2.75 | 2.98 | 3.20 | 3.47 | 4.03 | 4.68 | 5.42 | 5.79 | 6.24 | 0.01 | 0.09 | 0.13 | 0.16 |
| | | 300 | 1.94 | 2.23 | 2.51 | 3.07 | 3.35 | 3.63 | 3.97 | 4.30 | 4.63 | 5.02 | 5.84 | 6.78 | 7.86 | 8.39 | 9.06 | 0.02 | 0.14 | 0.20 | 0.25 |
| | | 400 | 2.49 | 2.86 | 3.23 | 3.97 | 4.34 | 4.70 | 5.14 | 5.57 | 6.00 | 6.51 | 7.58 | 8.81 | 10.21 | 10.91 | 11.77 | 0.03 | 0.19 | 0.27 | 0.33 |
| | | 500 | 3.02 | 3.47 | 3.93 | 4.84 | 5.29 | 5.74 | 6.27 | 6.81 | 7.34 | 7.96 | 9.27 | 10.78 | 12.50 | 13.35 | 14.40 | 0.04 | 0.24 | 0.34 | 0.41 |
| | 5 | 600 | 3.52 | 4.07 | 4.61 | 5.68 | 6.21 | 6.74 | 7.38 | 8.01 | 8.64 | 9.37 | 10.92 | 12.70 | 14.72 | 15.72 | 16.96 | 0.04 | 0.28 | 0.40 | 0.49 |
| | | 700 | 4.02 | 4.64 | 5.27 | 6.50 | 7.12 | 7.73 | 8.46 | 9.18 | 9.91 | 10.74 | 12.52 | 14.57 | 16.88 | 18.02 | 19.44 | 0.05 | 0.33 | 0.47 | 0.58 |
| | | 800 | 4.50 | 5.20 | 5.91 | 7.30 | 8.00 | 8.69 | 9.51 | 10.33 | 11.15 | 12.09 | 14.09 | 16.40 | 18.99 | 20.27 | 21.85 | 0.06 | 0.38 | 0.54 | 0.66 |
| | | 900 | 4.96 | 5.75 | 6.53 | 8.09 | 8.86 | 9.63 | 10.54 | 11.45 | 12.36 | 13.41 | 15.63 | 18.18 | 21.04 | 22.44 | 24.18 | 0.07 | 0.43 | 0.61 | 0.74 |
| | | 1000 | 5.42 | 6.28 | 7.15 | 8.86 | 9.71 | 10.55 | 11.55 | 12.55 | 13.55 | 14.69 | 17.13 | 19.91 | 23.02 | 24.55 | 26.43 | 0.07 | 0.47 | 0.67 | 0.82 |
| | | 1100 | 5.86 | 6.81 | 7.75 | 9.61 | 10.53 | 11.45 | 12.54 | 13.63 | 14.71 | 15.95 | 18.59 | 21.60 | 24.95 | 26.59 | 28.61 | 0.08 | 0.52 | 0.74 | 0.91 |
| | | 1200 | 6.29 | 7.32 | 8.33 | 10.35 | 11.34 | 12.33 | 13.51 | 14.68 | 15.84 | 17.18 | 20.01 | 23.24 | 26.82 | 28.56 | 30.70 | 0.09 | 0.57 | 0.81 | 0.99 |
| | 10 | 1300 | 6.72 | 7.82 | 8.91 | 11.07 | 12.14 | 13.20 | 14.46 | 15.71 | 16.95 | 18.38 | 21.40 | 24.83 | 28.62 | 30.46 | 32.71 | 0.10 | 0.62 | 0.87 | 1.07 |
| | | 1400 | 7.13 | 8.31 | 9.47 | 11.78 | 12.91 | 14.04 | 15.39 | 16.72 | 18.04 | 19.56 | 22.75 | 26.37 | 30.35 | 32.28 | 34.62 | 0.10 | 0.66 | 0.94 | 1.15 |
| | | 1500 | 7.54 | 8.78 | 10.02 | 12.47 | 13.68 | 14.87 | 16.29 | 17.70 | 19.09 | 20.70 | 24.06 | 27.86 | 32.02 | 34.02 | 36.44 | 0.11 | 0.71 | 1.01 | 1.24 |
| | | 1600 | 7.93 | 9.25 | 10.56 | 13.14 | 14.42 | 15.68 | 17.18 | 18.66 | 20.13 | 21.81 | 25.34 | 29.30 | 33.61 | 35.67 | 38.16 | 0.12 | 0.76 | 1.08 | 1.32 |
| | | 1700 | 8.32 | 9.71 | 11.09 | 13.81 | 15.15 | 16.47 | 18.04 | 19.60 | 21.13 | 22.89 | 26.57 | 30.68 | 35.12 | 37.24 | 39.78 | 0.12 | 0.81 | 1.14 | 1.40 |
| | | 1800 | 8.69 | 10.16 | 11.60 | 14.45 | 15.86 | 17.24 | 18.89 | 20.51 | 22.11 | 23.94 | 27.76 | 32.00 | 36.56 | 38.71 | 41.28 | 0.13 | 0.85 | 1.21 | 1.48 |
| | | 1900 | 9.06 | 10.59 | 12.11 | 15.09 | 16.55 | 18.00 | 19.71 | 21.39 | 23.05 | 24.96 | 28.90 | 33.26 | 37.91 | 40.10 | 42.68 | 0.14 | 0.90 | 1.28 | 1.57 |
| | 15 | 2000 | 9.42 | 11.02 | 12.60 | 15.70 | 17.23 | 18.73 | 20.51 | 22.25 | 23.97 | 25.94 | 30.00 | 34.47 | 39.18 | 41.38 | 43.95 | 0.15 | 0.95 | 1.34 | 1.65 |
| | | 2100 | 9.77 | 11.44 | 13.08 | 16.30 | 17.88 | 19.44 | 21.28 | 23.09 | 24.86 | 26.88 | 31.05 | 35.60 | 40.37 | 42.55 | 45.10 | 0.15 | 0.99 | 1.41 | 1.73 |
| | | 2200 | 10.11 | 11.84 | 13.55 | 16.89 | 18.52 | 20.13 | 22.03 | 23.90 | 25.72 | 27.80 | 32.06 | 36.68 | 41.45 | 43.63 | 46.13 | 0.16 | 1.04 | 1.48 | 1.81 |
| | | 2300 | 10.44 | 12.24 | 14.00 | 17.46 | 19.15 | 20.81 | 22.76 | 24.67 | 26.54 | 28.67 | 33.01 | 37.68 | 42.45 | 44.59 | | 0.17 | 1.09 | 1.55 | 1.90 |
| | | 2400 | 10.77 | 12.62 | 14.45 | 18.01 | 19.75 | 21.46 | 23.46 | 25.43 | 27.34 | 29.51 | 33.92 | 38.61 | 43.34 | 45.43 | | 0.18 | 1.14 | 1.61 | 1.98 |
| | | 2500 | 11.08 | 12.99 | 14.88 | 18.55 | 20.33 | 22.09 | 24.14 | 26.15 | 28.10 | 30.31 | 34.77 | 39.47 | 44.14 | | | 0.18 | 1.18 | 1.68 | 2.06 |
| | | 2600 | 11.39 | 13.36 | 15.29 | 19.07 | 20.90 | 22.69 | 24.79 | 26.84 | 28.82 | 31.06 | 35.56 | 40.26 | | | | 0.19 | 1.23 | 1.75 | 2.14 |
| | 20 | 2700 | 11.68 | 13.71 | 15.70 | 19.57 | 21.44 | 23.28 | 25.42 | 27.50 | 29.52 | 31.78 | 36.30 | 40.96 | | | | 0.20 | 1.28 | 1.82 | 2.23 |
| | | 2800 | 11.97 | 14.05 | 16.09 | 20.05 | 21.97 | 23.84 | 26.02 | 28.13 | 30.17 | 32.45 | 36.98 | 41.59 | | | | 0.21 | 1.33 | 1.88 | 2.31 |
| | | 2900 | 12.24 | 14.38 | 16.47 | 20.52 | 22.47 | 24.37 | 26.59 | 28.73 | 30.79 | 33.09 | 37.61 | 42.13 | | | | 0.21 | 1.37 | 1.95 | 2.39 |
| | | 3000 | 12.51 | 14.69 | 16.83 | 20.96 | 22.95 | 24.88 | 27.13 | 29.29 | 31.37 | 33.67 | 38.17 | | | | | 0.22 | 1.42 | 2.02 | 2.47 |
| | | 3100 | 12.76 | 15.00 | 17.18 | 21.39 | 23.41 | 25.37 | 27.64 | 29.82 | 31.91 | 34.21 | | | | | | 0.23 | 1.47 | 2.08 | 2.56 |
| | | 3200 | 13.01 | 15.29 | 17.52 | 21.80 | 23.85 | 25.83 | 28.13 | 30.32 | 32.41 | 34.71 | | | | | | 0.23 | 1.52 | 2.15 | 2.64 |
| | | 3300 | 13.24 | 15.57 | 17.84 | 22.19 | 24.27 | 26.27 | 28.58 | 30.78 | 32.87 | 35.15 | | | | | | 0.24 | 1.56 | 2.22 | 2.72 |
| | 25 | 3400 | 13.47 | 15.84 | 18.15 | 22.56 | 24.66 | 26.68 | 29.00 | 31.20 | 33.28 | 35.55 | | | | | | 0.25 | 1.61 | 2.29 | 2.80 |
| | | 3500 | 13.68 | 16.10 | 18.44 | 22.91 | 25.03 | 27.06 | 29.39 | 31.59 | 33.66 | 35.89 | | | | | | 0.26 | 1.66 | 2.35 | 2.89 |
| | | 3600 | 13.89 | 16.34 | 18.72 | 23.24 | 25.37 | 27.42 | 29.75 | 31.94 | | | | | | | | 0.26 | 1.71 | 2.42 | 2.97 |
| | | 3700 | 14.08 | 16.57 | 18.98 | 23.54 | 25.69 | 27.74 | 30.07 | 32.25 | | | | | | | | 0.27 | 1.75 | 2.49 | 3.05 |
| | | 3800 | 14.26 | 16.79 | 19.23 | 23.83 | 25.99 | 28.04 | 30.36 | 32.52 | | | | | | | | 0.28 | 1.80 | 2.55 | 3.13 |
| | | 3900 | 14.43 | 16.99 | 19.46 | 24.09 | 26.25 | 28.30 | 30.61 | 32.75 | | | | | | | | 0.29 | 1.85 | 2.62 | 3.21 |
| | 30 | 4000 | 14.59 | 17.18 | 19.67 | 24.33 | 26.50 | 28.54 | 30.83 | 32.94 | | | | | | | | 0.29 | 1.89 | 2.69 | 3.30 |
| | | 4100 | 14.74 | 17.35 | 19.87 | 24.55 | 26.71 | 28.75 | | | | | | | | | | 0.30 | 1.94 | 2.76 | 3.38 |
| | | 4200 | 14.87 | 17.52 | 20.05 | 24.74 | 26.90 | 28.92 | | | | | | | | | | 0.31 | 1.99 | 2.82 | 3.46 |
| | | 4300 | 15.00 | 17.66 | 20.21 | 24.91 | 27.06 | 29.06 | | | | | | | | | | 0.32 | 2.04 | 2.89 | 3.54 |
| | | 4400 | 15.11 | 17.79 | 20.35 | 25.06 | 27.19 | 29.17 | | | | | | | | | | 0.32 | 2.08 | 2.96 | 3.63 |
| | | 4500 | 15.20 | 17.91 | 20.48 | 25.18 | 27.30 | 29.25 | | | | | | | | | | 0.33 | 2.13 | 3.03 | 3.71 |
| | | 4600 | 15.29 | 18.01 | 20.59 | 25.28 | | | | | | | | | | | | 0.34 | 2.18 | 3.09 | 3.79 |
| | 35 | 4700 | 15.36 | 18.10 | 20.68 | 25.35 | | | | | | | | | | | | 0.34 | 2.23 | 3.16 | 3.87 |
| | | 4800 | 15.42 | 18.17 | 20.75 | 25.39 | | | | | | | | | | | | 0.35 | 2.27 | 3.23 | 3.96 |
| | | 4900 | 15.47 | 18.22 | 20.80 | 25.41 | | | | | | | | | | | | 0.36 | 2.32 | 3.29 | 4.04 |
| | | 5000 | 15.50 | 18.26 | 20.84 | 25.40 | | | | | | | | | | | | 0.37 | 2.37 | 3.36 | 4.12 |
| | | 5100 | 15.52 | 18.28 | 20.85 | | | | | | | | | | | | | 0.37 | 2.42 | 3.43 | 4.20 |
| | | 5200 | 15.53 | 18.29 | 20.84 | | | | | | | | | | | | | 0.38 | 2.46 | 3.50 | 4.29 |
| | | 5300 | 15.52 | 18.28 | 20.82 | | | | | | | | | | | | | 0.39 | 2.51 | 3.56 | 4.37 |
| | 40 | 5400 | 15.50 | 18.25 | 20.77 | | | | | | | | | | | | | 0.40 | 2.56 | 3.63 | 4.45 |
| | | 5500 | 15.46 | 18.20 | 20.70 | | | | | | | | | | | | | 0.40 | 2.61 | 3.70 | 4.53 |

Where v > 42 m/s, please consult our Applications Engineering Department

v (m/s)

Dynamically balanced (for details see DIN 2211)

Pulleys

Note: Pulley diameters shown are outside diameters for sections 5V/15N, 5V/15J .

# Power Ratings

## optibelt *RED POWER II* Section SPC

## Nominal Power Rating $P_N$ (kW) for $\beta$ = 180° and $L_d$ = 5600 mm

*Table 34*

| Pulleys | v (m/s) | $n_k$ (min$^{-1}$) | Datum diameter of small pulley $d_{dk}$ (mm) 224 | 250 | 280 | 300 | 315 | 335 | 355 | 375 | 400 | 450 | 500 | 560 | 630 | 710 | Additional power (kW) per belt for speed ratio i 1,01 to 1,05 | 1,06 to 1,26 | 1,27 to 1,57 | >1,57 |
|---|---|---|---|---|---|---|---|---|---|---|---|---|---|---|---|---|---|---|---|---|
| Statically balanced | | **700** | 11.09 | 13.84 | 16.98 | 19.05 | 20.59 | 22.64 | 24.66 | 26.67 | 29.16 | 34.06 | 38.86 | 44.48 | 50.84 | 57.82 | 0.14 | 0.90 | 1.28 | 1.57 |
| | | **950** | 14.23 | 17.84 | 21.94 | 24.64 | 26.64 | 29.28 | 31.90 | 34.48 | 37.66 | 43.88 | 49.88 | 56.80 | 64.44 | 72.55 | 0.19 | 1.22 | 1.73 | 2.13 |
| | | **1450** | 19.73 | 24.86 | 30.63 | 34.38 | 37.14 | 40.75 | 44.28 | 47.72 | 51.90 | 59.81 | 67.09 | 74.92 | 82.69 | | 0.29 | 1.86 | 2.65 | 3.25 |
| | | **2850** | 29.03 | 36.59 | 44.44 | 49.11 | 52.30 | | | | | | | | | | 0.57 | 3.67 | 5.20 | 6.38 |
| | | 50 | 1.12 | 1.35 | 1.63 | 1.80 | 1.94 | 2.12 | 2.30 | 2.47 | 2.69 | 3.13 | 3.57 | 4.09 | 4.69 | 5.37 | 0.01 | 0.06 | 0.09 | 0.11 |
| | | 100 | 2.07 | 2.52 | 3.04 | 3.39 | 3.64 | 3.98 | 4.32 | 4.66 | 5.09 | 5.93 | 6.76 | 7.75 | 8.90 | 10.20 | 0.02 | 0.13 | 0.18 | 0.22 |
| | | 200 | 3.80 | 4.67 | 5.66 | 6.32 | 6.81 | 7.46 | 8.11 | 8.76 | 9.56 | 11.16 | 12.75 | 14.64 | 16.82 | 19.29 | 0.04 | 0.26 | 0.37 | 0.45 |
| | | 300 | 5.40 | 6.67 | 8.11 | 9.07 | 9.79 | 10.74 | 11.68 | 12.63 | 13.80 | 16.12 | 18.42 | 21.15 | 24.31 | 27.86 | 0.06 | 0.39 | 0.55 | 0.67 |
| | | 350 | 6.17 | 7.63 | 9.30 | 10.40 | 11.23 | 12.32 | 13.41 | 14.50 | 15.84 | 18.52 | 21.16 | 24.30 | 27.92 | 31.98 | 0.07 | 0.45 | 0.64 | 0.78 |
| | 5 | 400 | 6.92 | 8.57 | 10.45 | 11.70 | 12.64 | 13.87 | 15.10 | 16.33 | 17.85 | 20.87 | 23.85 | 27.38 | 31.44 | 36.00 | 0.08 | 0.51 | 0.73 | 0.90 |
| | | 450 | 7.65 | 9.49 | 11.59 | 12.98 | 14.02 | 15.40 | 16.77 | 18.13 | 19.82 | 23.17 | 26.48 | 30.40 | 34.89 | 39.92 | 0.09 | 0.58 | 0.82 | 1.01 |
| | | 500 | 8.36 | 10.39 | 12.71 | 14.24 | 15.38 | 16.89 | 18.40 | 19.90 | 21.76 | 25.44 | 29.06 | 33.34 | 38.25 | 43.72 | 0.10 | 0.64 | 0.91 | 1.12 |
| | | 550 | 9.06 | 11.28 | 13.80 | 15.47 | 16.72 | 18.37 | 20.01 | 21.64 | 23.66 | 27.66 | 31.59 | 36.23 | 41.53 | 47.42 | 0.11 | 0.71 | 1.00 | 1.23 |
| | | 600 | 9.75 | 12.15 | 14.88 | 16.68 | 18.03 | 19.81 | 21.58 | 23.34 | 25.53 | 29.83 | 34.07 | 39.05 | 44.72 | 51.01 | 0.12 | 0.77 | 1.10 | 1.34 |
| | | 650 | 10.43 | 13.00 | 15.94 | 17.88 | 19.32 | 21.24 | 23.14 | 25.02 | 27.36 | 31.97 | 36.49 | 41.80 | 47.82 | 54.48 | 0.13 | 0.84 | 1.19 | 1.45 |
| | | 700 | 11.09 | 13.84 | 16.98 | 19.05 | 20.59 | 22.64 | 24.66 | 26.67 | 29.16 | 34.06 | 38.86 | 44.48 | 50.84 | 57.82 | 0.14 | 0.90 | 1.28 | 1.57 |
| | | 750 | 11.74 | 14.67 | 18.00 | 20.21 | 21.84 | 24.01 | 26.16 | 28.29 | 30.93 | 36.11 | 41.18 | 47.09 | 53.76 | 61.04 | 0.15 | 0.96 | 1.37 | 1.68 |
| | | 800 | 12.38 | 15.48 | 19.01 | 21.34 | 23.07 | 25.36 | 27.63 | 29.88 | 32.66 | 38.12 | 43.44 | 49.63 | 56.58 | 64.13 | 0.16 | 1.03 | 1.46 | 1.79 |
| | 10 | 850 | 13.01 | 16.28 | 20.01 | 22.46 | 24.28 | 26.69 | 29.08 | 31.44 | 34.36 | 40.09 | 45.65 | 52.10 | 59.30 | 67.08 | 0.17 | 1.09 | 1.55 | 1.90 |
| | | 900 | 13.63 | 17.07 | 20.98 | 23.56 | 25.47 | 28.00 | 30.50 | 32.98 | 36.03 | 42.00 | 47.80 | 54.49 | 61.92 | 69.89 | 0.18 | 1.16 | 1.64 | 2.01 |
| | | 950 | 14.23 | 17.84 | 21.94 | 24.64 | 26.64 | 29.28 | 31.90 | 34.48 | 37.66 | 43.88 | 49.88 | 56.80 | 64.44 | 72.55 | 0.19 | 1.22 | 1.73 | 2.13 |
| | | 1000 | 14.83 | 18.60 | 22.88 | 25.70 | 27.79 | 30.54 | 33.26 | 35.95 | 39.26 | 45.70 | 51.91 | 59.03 | 66.83 | 75.05 | 0.20 | 1.29 | 1.83 | 2.24 |
| | | 1050 | 15.41 | 19.35 | 23.81 | 26.74 | 28.91 | 31.78 | 34.60 | 37.39 | 40.82 | 47.48 | 53.88 | 61.17 | 69.12 | 77.40 | 0.21 | 1.35 | 1.92 | 2.35 |
| | | 1100 | 15.99 | 20.08 | 24.72 | 27.76 | 30.02 | 32.99 | 35.92 | 38.80 | 42.34 | 49.21 | 55.77 | 63.22 | 71.28 | 79.57 | 0.22 | 1.41 | 2.01 | 2.46 |
| | | 1150 | 16.56 | 20.81 | 25.62 | 28.77 | 31.10 | 34.17 | 37.20 | 40.18 | 43.83 | 50.89 | 57.61 | 65.19 | 73.32 | 81.57 | 0.23 | 1.48 | 2.10 | 2.57 |
| | | 1200 | 17.11 | 21.51 | 26.49 | 29.75 | 32.17 | 35.34 | 38.45 | 41.52 | 45.27 | 52.51 | 59.37 | 67.06 | 75.23 | 83.40 | 0.24 | 1.54 | 2.19 | 2.69 |
| | 15 | 1250 | 17.65 | 22.21 | 27.36 | 30.72 | 33.21 | 36.47 | 39.68 | 42.83 | 46.68 | 54.08 | 61.06 | 68.84 | 77.01 | 85.03 | 0.25 | 1.61 | 2.28 | 2.80 |
| | | 1300 | 18.19 | 22.89 | 28.20 | 31.66 | 34.22 | 37.58 | 40.88 | 44.11 | 48.05 | 55.60 | 62.69 | 70.52 | 78.64 | | 0.26 | 1.67 | 2.37 | 2.91 |
| | | 1350 | 18.71 | 23.56 | 29.03 | 32.59 | 35.22 | 38.67 | 42.04 | 45.35 | 49.37 | 57.06 | 64.23 | 72.09 | 80.14 | | 0.27 | 1.74 | 2.46 | 3.02 |
| | | 1400 | 19.22 | 24.22 | 29.84 | 33.50 | 36.19 | 39.72 | 43.18 | 46.55 | 50.66 | 58.47 | 65.70 | 73.56 | 81.49 | | 0.28 | 1.80 | 2.56 | 3.13 |
| | | 1450 | 19.73 | 24.86 | 30.63 | 34.38 | 37.14 | 40.75 | 44.28 | 47.72 | 51.90 | 59.81 | 67.09 | 74.92 | 82.69 | | 0.29 | 1.86 | 2.65 | 3.25 |
| | | 1500 | 20.22 | 25.49 | 31.40 | 35.24 | 38.07 | 41.75 | 45.35 | 48.85 | 53.09 | 61.09 | 68.40 | 76.17 | | | 0.30 | 1.93 | 2.74 | 3.36 |
| | | 1550 | 20.70 | 26.10 | 32.16 | 36.09 | 38.97 | 42.73 | 46.39 | 49.95 | 54.25 | 62.31 | 69.62 | | | | 0.31 | 1.99 | 2.83 | 3.47 |
| | | 1600 | 21.17 | 26.71 | 32.90 | 36.91 | 39.84 | 43.67 | 47.39 | 51.00 | 55.35 | 63.47 | 70.77 | | | | 0.32 | 2.06 | 2.92 | 3.58 |
| | | 1650 | 21.63 | 27.29 | 33.62 | 37.70 | 40.70 | 44.59 | 48.36 | 52.02 | 56.41 | 64.56 | 71.82 | | | | 0.33 | 2.12 | 3.01 | 3.69 |
| | | 1700 | 22.08 | 27.86 | 34.32 | 38.48 | 41.52 | 45.47 | 49.30 | 52.99 | 57.42 | 65.59 | 72.78 | | | | 0.34 | 2.19 | 3.10 | 3.80 |
| | 20 | 1750 | 22.51 | 28.42 | 35.00 | 39.23 | 42.32 | 46.33 | 50.20 | 53.93 | 58.38 | 66.54 | 73.65 | | | | 0.35 | 2.25 | 3.19 | 3.92 |
| | | 1800 | 22.94 | 28.97 | 35.66 | 39.96 | 43.09 | 47.15 | 51.06 | 54.82 | 59.29 | 67.43 | | | | | 0.36 | 2.31 | 3.29 | 4.03 |
| | | 1850 | 23.35 | 29.50 | 36.30 | 40.67 | 43.84 | 47.94 | 51.89 | 55.66 | 60.14 | 68.25 | | | | | 0.37 | 2.38 | 3.38 | 4.14 |
| | | 1900 | 23.76 | 30.01 | 36.92 | 41.35 | 44.56 | 48.70 | 52.67 | 56.47 | 60.95 | 68.99 | | | | | 0.38 | 2.44 | 3.47 | 4.25 |
| | | 1950 | 24.15 | 30.51 | 37.52 | 42.00 | 45.25 | 49.43 | 53.42 | 57.23 | 61.70 | 69.65 | | | | | 0.39 | 2.51 | 3.56 | 4.36 |
| | | 2000 | 24.53 | 30.99 | 38.11 | 42.63 | 45.91 | 50.12 | 54.13 | 57.94 | 62.40 | 70.24 | | | | | 0.40 | 2.57 | 3.65 | 4.48 |
| | | 2050 | 24.90 | 31.46 | 38.66 | 43.24 | 46.55 | 50.78 | 54.80 | 58.60 | 63.04 | | | | | | 0.41 | 2.64 | 3.74 | 4.59 |
| | 25 | 2100 | 25.25 | 31.91 | 39.20 | 43.82 | 47.15 | 51.40 | 55.43 | 59.22 | 63.62 | | | | | | 0.42 | 2.70 | 3.83 | 4.70 |
| | | 2150 | 25.60 | 32.34 | 39.72 | 44.37 | 47.72 | 51.99 | 56.01 | 59.79 | 64.14 | | | | | | 0.43 | 2.77 | 3.92 | 4.81 |
| | | 2200 | 25.93 | 32.76 | 40.21 | 44.90 | 48.27 | 52.54 | 56.56 | 60.31 | 64.61 | | | | | | 0.44 | 2.83 | 4.02 | 4.92 |
| | | 2250 | 26.25 | 33.16 | 40.68 | 45.40 | 48.78 | 53.05 | 57.06 | 60.78 | 65.01 | | | | | | 0.45 | 2.89 | 4.11 | 5.04 |
| | | 2300 | 26.55 | 33.55 | 41.13 | 45.87 | 49.26 | 53.53 | 57.52 | | | | | | | | 0.46 | 2.96 | 4.20 | 5.15 |
| | | 2350 | 26.84 | 33.92 | 41.56 | 46.32 | 49.71 | 53.97 | 57.93 | | | | | | | | 0.47 | 3.02 | 4.29 | 5.26 |
| | | 2400 | 27.12 | 34.27 | 41.96 | 46.73 | 50.12 | 54.37 | 58.29 | | | | | | | | 0.48 | 3.09 | 4.38 | 5.37 |
| | | 2450 | 27.39 | 34.60 | 42.33 | 47.12 | 50.51 | 54.73 | 58.61 | | | | | | | | 0.49 | 3.15 | 4.47 | 5.48 |
| | | 2500 | 27.64 | 34.91 | 42.69 | 47.48 | 50.85 | 55.05 | 58.88 | | | | | | | | 0.50 | 3.22 | 4.56 | 5.60 |
| | 30 | 2550 | 27.88 | 35.21 | 43.01 | 47.80 | 51.17 | | | | | | | | | | 0.51 | 3.28 | 4.66 | 5.71 |
| | | 2600 | 28.11 | 35.49 | 43.32 | 48.10 | 51.45 | | | | | | | | | | 0.52 | 3.34 | 4.75 | 5.82 |
| | | 2650 | 28.32 | 35.75 | 43.59 | 48.37 | 51.69 | | | | | | | | | | 0.53 | 3.41 | 4.84 | 5.93 |
| | | 2700 | 28.52 | 35.99 | 43.85 | 48.60 | 51.90 | | | | | | | | | | 0.54 | 3.47 | 4.93 | 6.04 |
| | | 2750 | 28.70 | 36.21 | 44.07 | 48.80 | 52.07 | | | | | | | | | | 0.55 | 3.54 | 5.02 | 6.16 |
| | | 2800 | 28.87 | 36.41 | 44.27 | | | | | | | | | | | | 0.56 | 3.60 | 5.11 | 6.27 |
| | | 2850 | 29.03 | 36.59 | 44.44 | | | | | | | | | | | | 0.57 | 3.67 | 5.20 | 6.38 |
| | | 2900 | 29.17 | 36.75 | 44.59 | | | | | | | | | | | | 0.58 | 3.73 | 5.29 | 6.49 |
| | 35 | 2950 | 29.29 | 36.90 | 44.70 | | | | | | | | | | | | 0.59 | 3.79 | 5.39 | 6.60 |
| | | 3000 | 29.40 | 37.02 | 44.79 | | | | | | | | | | | | 0.60 | 3.86 | 5.48 | 6.71 |
| | | 3050 | 29.50 | 37.12 | 44.85 | | | | | | | | | | | | 0.61 | 3.92 | 5.57 | 6.83 |
| | | 3100 | 29.58 | 37.20 | 44.88 | | | | | | | | | | | | 0.62 | 3.99 | 5.66 | 6.94 |
| | | 3150 | 29.64 | 37.25 | 44.88 | | | | | | | | | | | | 0.63 | 4.05 | 5.75 | 7.05 |
| | | 3200 | 29.69 | 37.29 | 44.85 | | | | | | | | | | | | 0.64 | 4.12 | 5.84 | 7.16 |
| | | 3250 | 29.72 | 37.31 | 44.79 | | | | | | | | | | | | 0.65 | 4.18 | 5.93 | 7.27 |
| | | 3300 | 29.73 | 37.30 | | | | | | | | | | | | | 0.66 | 4.24 | 6.02 | 7.39 |
| | | 3350 | 29.73 | 37.27 | | | | | | | | | | | | | 0.67 | 4.31 | 6.12 | 7.50 |
| | 40 | 3400 | 29.71 | 37.21 | | | | | | | | | | | | | 0.68 | 4.37 | 6.21 | 7.61 |
| | | 3450 | 29.68 | 37.14 | | | | | | | | | | | | | 0.69 | 4.44 | 6.30 | 7.72 |
| | | 3500 | 29.63 | 37.04 | | | | | | | | | | | | | 0.70 | 4.50 | 6.39 | 7.83 |

Where v > 42 m/s, please consult our Applications Engineering Department

v (m/s)

Dynamically balanced (for details see DIN 2211)

Pulleys

# Power Ratings

## optibelt *RED POWER II* Section 8V/25N, 8V/25J

## Nominal Power Rating $P_N$ (kW) for $\beta$ = 180° and 8V 2500/6350 mm $L_a$

*Table 35*

| Pulleys | v (m/s) | $n_k$ (min$^{-1}$) | Datum diameter of small pulley $d_{dk}$ (mm) 335 | 355 | 375 | 425 | 450 | 475 | 500 | 530 | 560 | 600 | 630 | 710 | 800 | Additional power (kW) per belt for speed ratio i 1,01 to 1,05 | 1,06 to 1,26 | 1,27 to 1,57 | >1,57 |
|---|---|---|---|---|---|---|---|---|---|---|---|---|---|---|---|---|---|---|---|
| Statically balanced | | **700** | 28.21 | 31.31 | 34.38 | 41.89 | 45.56 | 49.17 | 52.72 | 56.90 | 60.98 | 66.28 | 70.14 | 79.91 | 89.95 | 0.28 | 1.83 | 2.60 | 3.18 |
| | | **950** | 35.60 | 39.51 | 43.34 | 52.60 | 57.04 | 61.36 | 65.54 | 70.37 | 74.99 | 80.81 | 84.91 | 94.65 | 103.34 | 0.38 | 2.48 | 3.52 | 4.32 |
| | | **1450** | 46.12 | 50.96 | 55.57 | 66.08 | 70.75 | 75.01 | 78.82 | 82.80 | 86.09 | 89.34 | 90.88 | | | 0.59 | 3.79 | 5.38 | 6.60 |
| | | 50 | 2.80 | 3.08 | 3.36 | 4.04 | 4.39 | 4.73 | 5.07 | 5.47 | 5.88 | 6.42 | 6.82 | 7.88 | 9.07 | 0.02 | 0.13 | 0.19 | 0.23 |
| | | 100 | 5.23 | 5.76 | 6.29 | 7.60 | 8.26 | 8.91 | 9.56 | 10.34 | 11.11 | 12.14 | 12.91 | 14.95 | 17.22 | 0.04 | 0.26 | 0.37 | 0.45 |
| | | 150 | 7.50 | 8.28 | 9.05 | 10.98 | 11.93 | 12.88 | 13.83 | 14.96 | 16.09 | 17.59 | 18.71 | 21.67 | 24.96 | 0.06 | 0.39 | 0.56 | 0.68 |
| | | 200 | 9.68 | 10.69 | 11.70 | 14.22 | 15.46 | 16.70 | 17.94 | 19.42 | 20.89 | 22.83 | 24.29 | 28.13 | 32.40 | 0.08 | 0.52 | 0.74 | 0.91 |
| | | 250 | 11.78 | 13.03 | 14.27 | 17.35 | 18.88 | 20.40 | 21.92 | 23.73 | 25.53 | 27.91 | 29.68 | 34.37 | 39.56 | 0.10 | 0.65 | 0.93 | 1.14 |
| | 5 | 300 | 13.81 | 15.29 | 16.76 | 20.40 | 22.20 | 24.00 | 25.78 | 27.91 | 30.02 | 32.82 | 34.90 | 40.39 | 46.44 | 0.12 | 0.78 | 1.11 | 1.36 |
| | | 350 | 15.79 | 17.49 | 19.17 | 23.36 | 25.43 | 27.49 | 29.53 | 31.97 | 34.39 | 37.58 | 39.96 | 46.19 | 53.04 | 0.14 | 0.91 | 1.30 | 1.59 |
| | | 400 | 17.71 | 19.63 | 21.53 | 26.24 | 28.57 | 30.88 | 33.18 | 35.91 | 38.62 | 42.19 | 44.84 | 51.77 | 59.35 | 0.16 | 1.05 | 1.48 | 1.82 |
| | | 450 | 19.58 | 21.71 | 23.82 | 29.04 | 31.62 | 34.18 | 36.72 | 39.73 | 42.71 | 46.64 | 49.54 | 57.12 | 65.35 | 0.18 | 1.18 | 1.67 | 2.05 |
| | | 500 | 21.40 | 23.74 | 26.05 | 31.77 | 34.59 | 37.38 | 40.14 | 43.43 | 46.66 | 50.92 | 54.06 | 62.23 | 71.02 | 0.20 | 1.31 | 1.86 | 2.27 |
| | | 550 | 23.18 | 25.71 | 28.23 | 34.42 | 37.47 | 40.48 | 43.46 | 46.99 | 50.48 | 55.04 | 58.39 | 67.07 | 76.34 | 0.22 | 1.44 | 2.04 | 2.50 |
| | 10 | 600 | 24.90 | 27.63 | 30.34 | 36.99 | 40.26 | 43.48 | 46.67 | 50.43 | 54.14 | 58.97 | 62.52 | 71.65 | 81.28 | 0.24 | 1.57 | 2.23 | 2.73 |
| | | 650 | 26.58 | 29.50 | 32.39 | 39.48 | 42.96 | 46.38 | 49.76 | 53.74 | 57.64 | 62.73 | 66.44 | 75.93 | 85.83 | 0.26 | 1.70 | 2.41 | 2.96 |
| | | 700 | 28.21 | 31.31 | 34.38 | 41.89 | 45.56 | 49.17 | 52.72 | 56.90 | 60.98 | 66.28 | 70.14 | 79.91 | 89.95 | 0.28 | 1.83 | 2.60 | 3.18 |
| | | 750 | 29.79 | 33.07 | 36.30 | 44.21 | 48.06 | 51.85 | 55.56 | 59.91 | 64.16 | 69.64 | 73.61 | 83.57 | 93.62 | 0.30 | 1.96 | 2.78 | 3.41 |
| | | 800 | 31.32 | 34.77 | 38.16 | 46.45 | 50.47 | 54.41 | 58.26 | 62.77 | 67.15 | 72.78 | 76.83 | 86.89 | 96.83 | 0.32 | 2.09 | 2.97 | 3.64 |
| | 15 | 850 | 32.80 | 36.41 | 39.96 | 48.59 | 52.77 | 56.85 | 60.83 | 65.47 | 69.96 | 75.69 | 79.79 | 89.86 | 99.53 | 0.34 | 2.22 | 3.15 | 3.87 |
| | | 900 | 34.23 | 37.99 | 41.69 | 50.64 | 54.96 | 59.17 | 63.26 | 68.01 | 72.58 | 78.37 | 82.49 | 92.45 | 101.71 | 0.36 | 2.35 | 3.34 | 4.09 |
| | | 950 | 35.60 | 39.51 | 43.34 | 52.60 | 57.04 | 61.36 | 65.54 | 70.37 | 74.99 | 80.81 | 84.91 | 94.65 | 103.34 | 0.38 | 2.48 | 3.52 | 4.32 |
| | | 1000 | 36.92 | 40.97 | 44.93 | 54.46 | 59.01 | 63.41 | 67.66 | 72.55 | 77.19 | 82.99 | 87.04 | 96.43 | 104.39 | 0.40 | 2.61 | 3.71 | 4.55 |
| | | 1050 | 38.19 | 42.36 | 46.44 | 56.21 | 60.85 | 65.32 | 69.62 | 74.54 | 79.18 | 84.91 | 88.86 | 97.79 | 104.83 | 0.42 | 2.74 | 3.90 | 4.78 |
| | 20 | 1100 | 39.40 | 43.69 | 47.87 | 57.85 | 62.57 | 67.10 | 71.42 | 76.33 | 80.93 | 86.55 | 90.36 | 98.70 | 104.64 | 0.44 | 2.88 | 4.08 | 5.00 |
| | | 1150 | 40.55 | 44.95 | 49.23 | 59.39 | 64.16 | 68.72 | 73.04 | 77.93 | 82.45 | 87.90 | 91.53 | 99.14 | | 0.46 | 3.01 | 4.27 | 5.23 |
| | | 1200 | 41.64 | 46.14 | 50.50 | 60.81 | 65.62 | 70.18 | 74.49 | 79.31 | 83.72 | 88.95 | 92.36 | 99.10 | | 0.49 | 3.14 | 4.45 | 5.46 |
| | | 1250 | 42.66 | 47.25 | 51.69 | 62.12 | 66.94 | 71.49 | 75.75 | 80.47 | 84.74 | 89.70 | 92.83 | 98.55 | | 0.51 | 3.27 | 4.64 | 5.69 |
| | | 1300 | 43.63 | 48.30 | 52.80 | 63.30 | 68.12 | 72.63 | 76.82 | 81.41 | 85.50 | 90.12 | 92.93 | | | 0.53 | 3.40 | 4.82 | 5.91 |
| | | 1350 | 44.53 | 49.26 | 53.82 | 64.36 | 69.15 | 73.60 | 77.70 | 82.12 | 85.98 | 90.20 | 92.64 | | | 0.55 | 3.53 | 5.01 | 6.14 |
| | 25 | 1400 | 45.36 | 50.15 | 54.74 | 65.29 | 70.03 | 74.39 | 78.36 | 82.58 | 86.18 | | | | | 0.57 | 3.66 | 5.19 | 6.37 |
| | | 1450 | 46.12 | 50.96 | 55.57 | 66.08 | 70.75 | 75.01 | 78.82 | 82.80 | 86.09 | | | | | 0.59 | 3.79 | 5.38 | 6.60 |
| | | 1500 | 46.82 | 51.68 | 56.31 | 66.74 | 71.32 | 75.43 | 79.07 | 82.76 | 85.70 | | | | | 0.61 | 3.92 | 5.57 | 6.82 |
| | | 1550 | 47.44 | 52.32 | 56.95 | 67.26 | 71.72 | 75.66 | 79.09 | | | | | | | 0.63 | 4.05 | 5.75 | 7.05 |
| | | 1600 | 47.98 | 52.88 | 57.48 | 67.64 | 71.95 | 75.70 | 78.87 | | | | | | | 0.65 | 4.18 | 5.94 | 7.28 |
| | | 1650 | 48.46 | 53.34 | 57.91 | 67.87 | 72.00 | 75.53 | 78.43 | | | | | | | 0.67 | 4.31 | 6.12 | 7.51 |
| | 30 | 1700 | 48.85 | 53.72 | 58.24 | 67.95 | 71.88 | 75.15 | 77.74 | | | | | | | 0.69 | 4.44 | 6.31 | 7.73 |
| | | 1750 | 49.16 | 54.00 | 58.46 | 67.86 | 71.57 | 74.56 | 76.80 | | | | | | | 0.71 | 4.57 | 6.49 | 7.96 |
| | | 1800 | 49.40 | 54.18 | 58.56 | 67.62 | 71.07 | | | | | | | | | 0.73 | 4.70 | 6.68 | 8.19 |
| | | 1850 | 49.54 | 54.27 | 58.55 | 67.22 | 70.38 | | | | | | | | | 0.75 | 4.84 | 6.86 | 8.42 |
| | | 1900 | 49.61 | 54.25 | 58.42 | 66.65 | 69.49 | | | | | | | | | 0.77 | 4.97 | 7.05 | 8.64 |
| | | 1950 | 49.59 | 54.13 | 58.18 | 65.90 | 68.40 | | | | | | | | | 0.79 | 5.10 | 7.23 | 8.87 |
| | 35 | 2000 | 49.47 | 53.91 | 57.81 | 64.98 | 67.10 | | | | | | | | | 0.81 | 5.23 | 7.42 | 9.10 |
| | | 2050 | 49.27 | 53.58 | 57.31 | | | | | | | | | | | 0.83 | 5.36 | 7.61 | 9.33 |
| | | 2100 | 48.98 | 53.14 | 56.69 | | | | | | | | | | | 0.85 | 5.49 | 7.79 | 9.55 |
| | | 2150 | 48.59 | 52.59 | 55.93 | | | | | | | | | | | 0.87 | 5.62 | 7.98 | 9.78 |
| | | 2200 | 48.10 | 51.93 | 55.04 | | | | | | | | | | | 0.89 | 5.75 | 8.16 | 10.01 |
| | | 2250 | 47.51 | 51.15 | 54.02 | | | | | | | | | | | 0.91 | 5.88 | 8.35 | 10.23 |
| | | | | | | | | | | | | | | | Where v > 42 m/s, please consult our Applications Engineering Department | | | | |
| | | | 40 | | | | | | | | | | | | | v (m/s) | | | |
| Dynamically balanced (for details see USA Standard RMA/MPTA) | | | | | | | | | | | | | | | | Pulleys | | | |

# Power Ratings

## optibelt SUPER TX M=S Section XPZ, 3VX

## Nominal Power Rating $P_N$ (kW) for $\beta$ = 180° and $L_d$ = 1600 mm

*Table 36*

| Pulleys | v (m/s) | $n_k$ (min$^{-1}$) | Datum diameter of small pulley $d_{dk}$ (mm) 56 | 60 | 63 | 71 | 80 | 85 | 90 | 95 | 100 | 112 | 125 | 140 | 160 | 180 | 200 | Additional power (kW) per belt for speed ratio i 1,01 to 1,05 | 1,06 to 1,26 | 1,27 to 1,57 | >1,57 |
|---|---|---|---|---|---|---|---|---|---|---|---|---|---|---|---|---|---|---|---|---|---|
| Statically balanced | | **700** | 0.63 | 0.73 | 0.81 | 1.00 | 1.22 | 1.34 | 1.46 | 1.58 | 1.70 | 1.98 | 2.29 | 2.63 | 3.08 | 3.53 | 3.97 | 0.01 | 0.06 | 0.08 | 0.10 |
| | | **950** | 0.80 | 0.93 | 1.03 | 1.29 | 1.58 | 1.74 | 1.90 | 2.05 | 2.21 | 2.58 | 2.97 | 3.43 | 4.02 | 4.60 | 5.17 | 0.01 | 0.08 | 0.11 | 0.13 |
| | | **1450** | 1.10 | 1.29 | 1.44 | 1.82 | 2.24 | 2.47 | 2.70 | 2.92 | 3.15 | 3.68 | 4.25 | 4.90 | 5.74 | 6.57 | 7.37 | 0.02 | 0.12 | 0.16 | 0.20 |
| | | **2850** | 1.78 | 2.12 | 2.38 | 3.06 | 3.81 | 4.22 | 4.62 | 5.02 | 5.41 | 6.33 | 7.30 | 8.38 | 9.74 | 11.01 | 12.19 | 0.04 | 0.23 | 0.32 | 0.40 |
| | | 100 | 0.13 | 0.14 | 0.16 | 0.19 | 0.23 | 0.25 | 0.27 | 0.29 | 0.31 | 0.36 | 0.41 | 0.47 | 0.55 | 0.63 | 0.70 | 0.00 | 0.01 | 0.01 | 0.01 |
| | | 200 | 0.23 | 0.26 | 0.28 | 0.35 | 0.42 | 0.46 | 0.50 | 0.53 | 0.57 | 0.66 | 0.76 | 0.87 | 1.02 | 1.17 | 1.31 | 0.00 | 0.02 | 0.02 | 0.03 |
| | | 300 | 0.32 | 0.37 | 0.40 | 0.49 | 0.59 | 0.65 | 0.71 | 0.76 | 0.82 | 0.95 | 1.09 | 1.25 | 1.46 | 1.67 | 1.88 | 0.00 | 0.02 | 0.03 | 0.04 |
| | | 400 | 0.40 | 0.46 | 0.51 | 0.63 | 0.76 | 0.83 | 0.91 | 0.98 | 1.05 | 1.22 | 1.40 | 1.61 | 1.89 | 2.16 | 2.43 | 0.00 | 0.03 | 0.05 | 0.06 |
| | | 500 | 0.48 | 0.56 | 0.61 | 0.76 | 0.92 | 1.01 | 1.10 | 1.19 | 1.27 | 1.48 | 1.71 | 1.96 | 2.30 | 2.63 | 2.96 | 0.01 | 0.04 | 0.06 | 0.07 |
| | | 600 | 0.56 | 0.65 | 0.71 | 0.88 | 1.07 | 1.18 | 1.28 | 1.39 | 1.49 | 1.74 | 2.00 | 2.30 | 2.70 | 3.09 | 3.47 | 0.01 | 0.05 | 0.07 | 0.08 |
| | | 700 | 0.63 | 0.73 | 0.81 | 1.00 | 1.22 | 1.34 | 1.46 | 1.58 | 1.70 | 1.98 | 2.29 | 2.63 | 3.08 | 3.53 | 3.97 | 0.01 | 0.06 | 0.08 | 0.10 |
| | | 800 | 0.70 | 0.81 | 0.90 | 1.12 | 1.37 | 1.50 | 1.64 | 1.77 | 1.91 | 2.23 | 2.57 | 2.95 | 3.46 | 3.96 | 4.46 | 0.01 | 0.06 | 0.09 | 0.11 |
| | | 900 | 0.77 | 0.89 | 0.99 | 1.23 | 1.51 | 1.66 | 1.81 | 1.96 | 2.11 | 2.46 | 2.84 | 3.27 | 3.83 | 4.39 | 4.93 | 0.01 | 0.07 | 0.10 | 0.13 |
| | | 1000 | 0.83 | 0.97 | 1.07 | 1.35 | 1.65 | 1.81 | 1.98 | 2.14 | 2.31 | 2.69 | 3.11 | 3.58 | 4.20 | 4.80 | 5.40 | 0.01 | 0.08 | 0.11 | 0.14 |
| | | 1100 | 0.90 | 1.05 | 1.16 | 1.45 | 1.78 | 1.96 | 2.14 | 2.32 | 2.50 | 2.92 | 3.37 | 3.88 | 4.55 | 5.21 | 5.85 | 0.01 | 0.09 | 0.12 | 0.15 |
| | | 1200 | 0.96 | 1.12 | 1.24 | 1.56 | 1.92 | 2.11 | 2.31 | 2.50 | 2.69 | 3.14 | 3.63 | 4.18 | 4.90 | 5.61 | 6.30 | 0.01 | 0.10 | 0.14 | 0.17 |
| | | 1300 | 1.02 | 1.19 | 1.32 | 1.66 | 2.05 | 2.26 | 2.46 | 2.67 | 2.88 | 3.36 | 3.88 | 4.47 | 5.24 | 6.00 | 6.73 | 0.02 | 0.10 | 0.15 | 0.18 |
| | | 1400 | 1.07 | 1.26 | 1.40 | 1.77 | 2.17 | 2.40 | 2.62 | 2.84 | 3.06 | 3.58 | 4.13 | 4.76 | 5.58 | 6.38 | 7.16 | 0.02 | 0.11 | 0.16 | 0.19 |
| | | 1500 | 1.13 | 1.33 | 1.48 | 1.87 | 2.30 | 2.54 | 2.77 | 3.01 | 3.24 | 3.79 | 4.38 | 5.04 | 5.91 | 6.75 | 7.58 | 0.02 | 0.12 | 0.17 | 0.21 |
| | | 1600 | 1.19 | 1.40 | 1.55 | 1.96 | 2.42 | 2.67 | 2.92 | 3.17 | 3.42 | 4.00 | 4.62 | 5.32 | 6.23 | 7.12 | 7.98 | 0.02 | 0.13 | 0.18 | 0.22 |
| | 5 | 1700 | 1.24 | 1.46 | 1.63 | 2.06 | 2.54 | 2.81 | 3.07 | 3.33 | 3.59 | 4.20 | 4.85 | 5.59 | 6.55 | 7.48 | 8.38 | 0.02 | 0.14 | 0.19 | 0.24 |
| | | 1800 | 1.29 | 1.52 | 1.70 | 2.16 | 2.66 | 2.94 | 3.22 | 3.49 | 3.76 | 4.40 | 5.09 | 5.86 | 6.86 | 7.83 | 8.77 | 0.02 | 0.14 | 0.20 | 0.25 |
| | | 1900 | 1.34 | 1.59 | 1.77 | 2.25 | 2.78 | 3.07 | 3.36 | 3.65 | 3.93 | 4.60 | 5.32 | 6.12 | 7.16 | 8.17 | 9.14 | 0.02 | 0.15 | 0.22 | 0.26 |
| | | 2000 | 1.39 | 1.65 | 1.84 | 2.34 | 2.90 | 3.20 | 3.50 | 3.80 | 4.10 | 4.80 | 5.54 | 6.38 | 7.46 | 8.50 | 9.51 | 0.02 | 0.16 | 0.23 | 0.28 |
| | | 2100 | 1.44 | 1.71 | 1.91 | 2.43 | 3.01 | 3.33 | 3.64 | 3.95 | 4.26 | 4.99 | 5.76 | 6.63 | 7.75 | 8.83 | 9.87 | 0.03 | 0.17 | 0.24 | 0.29 |
| | | 2200 | 1.49 | 1.77 | 1.97 | 2.52 | 3.12 | 3.45 | 3.78 | 4.10 | 4.42 | 5.18 | 5.98 | 6.88 | 8.04 | 9.15 | 10.21 | 0.03 | 0.18 | 0.25 | 0.31 |
| | | 2300 | 1.54 | 1.83 | 2.04 | 2.61 | 3.23 | 3.57 | 3.91 | 4.25 | 4.58 | 5.37 | 6.19 | 7.12 | 8.32 | 9.46 | 10.55 | 0.03 | 0.18 | 0.26 | 0.32 |
| | | 2400 | 1.58 | 1.88 | 2.10 | 2.69 | 3.34 | 3.69 | 4.05 | 4.39 | 4.74 | 5.55 | 6.40 | 7.36 | 8.59 | 9.76 | 10.87 | 0.03 | 0.19 | 0.27 | 0.33 |
| | | 2500 | 1.63 | 1.94 | 2.17 | 2.78 | 3.45 | 3.81 | 4.18 | 4.54 | 4.89 | 5.73 | 6.61 | 7.60 | 8.86 | 10.06 | 11.19 | 0.03 | 0.20 | 0.28 | 0.35 |
| | | 2600 | 1.67 | 1.99 | 2.23 | 2.86 | 3.55 | 3.93 | 4.31 | 4.68 | 5.04 | 5.91 | 6.81 | 7.83 | 9.12 | 10.34 | 11.49 | 0.03 | 0.21 | 0.30 | 0.36 |
| | | 2700 | 1.71 | 2.05 | 2.29 | 2.94 | 3.66 | 4.05 | 4.43 | 4.81 | 5.19 | 6.08 | 7.01 | 8.05 | 9.37 | 10.62 | 11.78 | 0.03 | 0.22 | 0.31 | 0.38 |
| | | 2800 | 1.76 | 2.10 | 2.35 | 3.02 | 3.76 | 4.16 | 4.56 | 4.95 | 5.34 | 6.25 | 7.21 | 8.27 | 9.62 | 10.88 | 12.06 | 0.03 | 0.22 | 0.32 | 0.39 |
| | | 2900 | 1.80 | 2.15 | 2.41 | 3.10 | 3.86 | 4.27 | 4.68 | 5.08 | 5.48 | 6.42 | 7.40 | 8.49 | 9.86 | 11.14 | 12.33 | 0.04 | 0.23 | 0.33 | 0.40 |
| | | 3000 | 1.84 | 2.20 | 2.47 | 3.18 | 3.96 | 4.38 | 4.80 | 5.21 | 5.62 | 6.58 | 7.59 | 8.69 | 10.09 | 11.39 | 12.58 | 0.04 | 0.24 | 0.34 | 0.42 |
| | | 3100 | 1.88 | 2.25 | 2.53 | 3.25 | 4.05 | 4.49 | 4.92 | 5.34 | 5.76 | 6.74 | 7.77 | 8.90 | 10.32 | 11.63 | 12.82 | 0.04 | 0.25 | 0.35 | 0.43 |
| | | 3200 | 1.92 | 2.30 | 2.58 | 3.33 | 4.15 | 4.60 | 5.04 | 5.47 | 5.90 | 6.90 | 7.95 | 9.10 | 10.54 | 11.86 | 13.05 | 0.04 | 0.26 | 0.36 | 0.45 |
| | | 3300 | 1.95 | 2.35 | 2.64 | 3.40 | 4.24 | 4.70 | 5.15 | 5.60 | 6.03 | 7.06 | 8.12 | 9.29 | 10.75 | 12.08 | 13.27 | 0.04 | 0.26 | 0.37 | 0.46 |
| | 10 | 3400 | 1.99 | 2.39 | 2.69 | 3.48 | 4.34 | 4.80 | 5.27 | 5.72 | 6.17 | 7.21 | 8.29 | 9.48 | 10.95 | 12.29 | 13.47 | 0.04 | 0.27 | 0.39 | 0.47 |
| | | 3500 | 2.03 | 2.44 | 2.75 | 3.55 | 4.43 | 4.91 | 5.38 | 5.84 | 6.30 | 7.36 | 8.46 | 9.66 | 11.15 | 12.48 | 13.66 | 0.04 | 0.28 | 0.40 | 0.49 |
| | | 3600 | 2.06 | 2.48 | 2.80 | 3.62 | 4.52 | 5.01 | 5.49 | 5.96 | 6.42 | 7.51 | 8.62 | 9.84 | 11.34 | 12.67 | 13.84 | 0.04 | 0.29 | 0.41 | 0.50 |
| | | 3700 | 2.10 | 2.53 | 2.85 | 3.69 | 4.60 | 5.10 | 5.59 | 6.07 | 6.55 | 7.65 | 8.78 | 10.01 | 11.52 | 12.85 | 14.00 | 0.05 | 0.30 | 0.42 | 0.52 |
| | | 3800 | 2.13 | 2.57 | 2.90 | 3.75 | 4.69 | 5.20 | 5.70 | 6.19 | 6.67 | 7.79 | 8.94 | 10.18 | 11.69 | 13.02 | 14.15 | 0.05 | 0.30 | 0.43 | 0.53 |
| | | 3900 | 2.16 | 2.61 | 2.95 | 3.82 | 4.78 | 5.29 | 5.80 | 6.30 | 6.79 | 7.92 | 9.09 | 10.34 | 11.86 | 13.17 | 14.28 | 0.05 | 0.31 | 0.44 | 0.54 |
| | | 4000 | 2.20 | 2.66 | 3.00 | 3.89 | 4.86 | 5.39 | 5.90 | 6.41 | 6.91 | 8.06 | 9.23 | 10.50 | 12.01 | 13.32 | 14.40 | 0.05 | 0.32 | 0.45 | 0.56 |
| | | 4100 | 2.23 | 2.70 | 3.04 | 3.95 | 4.94 | 5.48 | 6.00 | 6.52 | 7.02 | 8.19 | 9.38 | 10.65 | 12.16 | 13.45 | 14.50 | 0.05 | 0.33 | 0.47 | 0.57 |
| | | 4200 | 2.26 | 2.74 | 3.09 | 4.01 | 5.02 | 5.57 | 6.10 | 6.62 | 7.13 | 8.31 | 9.51 | 10.79 | 12.30 | 13.57 | 14.59 | 0.05 | 0.34 | 0.48 | 0.58 |
| | | 4300 | 2.29 | 2.77 | 3.13 | 4.08 | 5.10 | 5.65 | 6.19 | 6.72 | 7.24 | 8.44 | 9.65 | 10.93 | 12.43 | 13.68 | 14.66 | 0.05 | 0.34 | 0.49 | 0.60 |
| | | 4400 | 2.32 | 2.81 | 3.18 | 4.14 | 5.18 | 5.74 | 6.29 | 6.82 | 7.35 | 8.56 | 9.77 | 11.06 | 12.56 | 13.78 | 14.71 | 0.05 | 0.35 | 0.50 | 0.61 |
| | | 4500 | 2.35 | 2.85 | 3.22 | 4.20 | 5.25 | 5.82 | 6.38 | 6.92 | 7.45 | 8.67 | 9.90 | 11.18 | 12.67 | 13.87 | 14.75 | 0.06 | 0.36 | 0.51 | 0.63 |
| | | 4600 | 2.37 | 2.89 | 3.26 | 4.25 | 5.33 | 5.90 | 6.47 | 7.02 | 7.55 | 8.78 | 10.02 | 11.30 | 12.77 | 13.94 | | 0.06 | 0.37 | 0.52 | 0.64 |
| | | 4700 | 2.40 | 2.92 | 3.31 | 4.31 | 5.40 | 5.98 | 6.55 | 7.11 | 7.65 | 8.89 | 10.13 | 11.41 | 12.87 | 14.00 | | 0.06 | 0.38 | 0.53 | 0.65 |
| | | 4800 | 2.43 | 2.96 | 3.35 | 4.37 | 5.47 | 6.06 | 6.64 | 7.20 | 7.75 | 9.00 | 10.24 | 11.52 | 12.95 | 14.05 | | 0.06 | 0.38 | 0.54 | 0.67 |
| | | 4900 | 2.45 | 2.99 | 3.39 | 4.42 | 5.54 | 6.14 | 6.72 | 7.29 | 7.84 | 9.10 | 10.34 | 11.62 | 13.03 | 14.08 | | 0.06 | 0.39 | 0.56 | 0.68 |
| | | 5000 | 2.48 | 3.02 | 3.42 | 4.47 | 5.61 | 6.21 | 6.80 | 7.38 | 7.93 | 9.20 | 10.44 | 11.71 | 13.10 | 14.10 | | 0.06 | 0.40 | 0.57 | 0.70 |
| | 15 | 5100 | 2.50 | 3.05 | 3.46 | 4.53 | 5.67 | 6.28 | 6.88 | 7.46 | 8.02 | 9.29 | 10.54 | 11.80 | 13.16 | | | 0.06 | 0.41 | 0.58 | 0.71 |
| | | 5200 | 2.52 | 3.08 | 3.50 | 4.58 | 5.74 | 6.36 | 6.96 | 7.54 | 8.11 | 9.38 | 10.63 | 11.88 | 13.20 | | | 0.06 | 0.42 | 0.59 | 0.72 |
| | | 5300 | 2.54 | 3.11 | 3.53 | 4.63 | 5.80 | 6.42 | 7.03 | 7.62 | 8.19 | 9.47 | 10.71 | 11.95 | 13.24 | | | 0.07 | 0.42 | 0.60 | 0.74 |
| | | 5400 | 2.57 | 3.14 | 3.57 | 4.67 | 5.86 | 6.49 | 7.10 | 7.70 | 8.27 | 9.55 | 10.79 | 12.01 | 13.27 | | | 0.07 | 0.43 | 0.61 | 0.75 |
| | | 5500 | 2.59 | 3.17 | 3.60 | 4.72 | 5.92 | 6.56 | 7.17 | 7.77 | 8.34 | 9.63 | 10.86 | 12.07 | 13.28 | | | 0.07 | 0.44 | 0.62 | 0.77 |
| | | 5600 | 2.61 | 3.20 | 3.64 | 4.77 | 5.98 | 6.62 | 7.24 | 7.84 | 8.42 | 9.70 | 10.93 | 12.12 | | | | 0.07 | 0.45 | 0.64 | 0.78 |
| | | 5800 | 2.64 | 3.25 | 3.70 | 4.85 | 6.09 | 6.74 | 7.37 | 7.97 | 8.55 | 9.84 | 11.05 | 12.20 | | | | 0.07 | 0.46 | 0.66 | 0.81 |
| | | 6000 | 2.68 | 3.30 | 3.76 | 4.94 | 6.19 | 6.85 | 7.49 | 8.10 | 8.68 | 9.96 | 11.15 | 12.25 | | | | 0.07 | 0.48 | 0.68 | 0.84 |
| | | 6200 | 2.71 | 3.35 | 3.81 | 5.01 | 6.28 | 6.95 | 7.59 | 8.21 | 8.79 | 10.06 | 11.22 | 12.26 | | | | 0.08 | 0.50 | 0.70 | 0.86 |
| | | 6400 | 2.74 | 3.39 | 3.86 | 5.08 | 6.37 | 7.05 | 7.69 | 8.31 | 8.89 | 10.15 | 11.28 | 12.25 | | | | 0.08 | 0.51 | 0.73 | 0.89 |
| | | 6600 | 2.76 | 3.43 | 3.91 | 5.15 | 6.45 | 7.13 | 7.78 | 8.40 | 8.98 | 10.22 | 11.30 | | | | | 0.08 | 0.53 | 0.75 | 0.92 |
| | 20 | 6800 | 2.79 | 3.46 | 3.95 | 5.21 | 6.53 | 7.21 | 7.86 | 8.48 | 9.05 | 10.27 | 11.31 | | | | | 0.08 | 0.54 | 0.77 | 0.95 |
| | | 7000 | 2.81 | 3.49 | 3.99 | 5.27 | 6.59 | 7.28 | 7.93 | 8.54 | 9.11 | 10.30 | 11.29 | | | | | 0.09 | 0.56 | 0.79 | 0.97 |
| | | 7200 | 2.82 | 3.52 | 4.02 | 5.31 | 6.65 | 7.34 | 7.99 | 8.59 | 9.16 | 10.31 | | | | | | 0.09 | 0.58 | 0.82 | 1.00 |
| | | 7400 | 2.83 | 3.54 | 4.05 | 5.36 | 6.70 | 7.39 | 8.04 | 8.64 | 9.19 | 10.31 | | | | | | 0.09 | 0.59 | 0.84 | 1.03 |
| | | 7600 | 2.84 | 3.56 | 4.08 | 5.40 | 6.75 | 7.43 | 8.07 | 8.67 | 9.20 | 10.28 | | | | | | 0.09 | 0.61 | 0.86 | 1.06 |
| | | 7800 | 2.85 | 3.57 | 4.10 | 5.43 | 6.78 | 7.47 | 8.10 | 8.68 | 9.21 | 10.23 | | | | | | 0.10 | 0.62 | 0.89 | 1.09 |
| | | 8000 | 2.85 | 3.59 | 4.12 | 5.45 | 6.81 | 7.49 | 8.12 | 8.68 | 9.19 | 10.17 | | | | | | 0.10 | 0.64 | 0.91 | 1.11 |
| | | 8200 | 2.85 | 3.59 | 4.13 | 5.47 | 6.83 | 7.50 | 8.12 | 8.67 | 9.17 | | | | | | | 0.10 | 0.66 | 0.93 | 1.14 |
| | | 8400 | 2.85 | 3.60 | 4.14 | 5.49 | 6.84 | 7.50 | 8.11 | 8.65 | 9.12 | | | | | | | 0.10 | 0.67 | 0.95 | 1.17 |
| | | | 25 | | 30 | 35 | | 40 | | | | | | | | | | v (m/s) | | | |
| | | | Dynamically balanced (for details see DIN 2211) | | | | | | | | | | | | | | | Pulleys | | | |

Where v > 42 m/s, please consult our Applications Engineering Department

SUPER TX M=S



Note: Pulley diameters shown are outside diameters for sections 3VX.

# Power Ratings

## optibelt SUPER TX M=S Section XPA

## Nominal Power Rating $P_N$ (kW) for $\beta$ = 180° and $L_d$ = 2500 mm

*Table 37*

| Pulleys | v (m/s) | $n_k$ (min$^{-1}$) | Datum diameter of small pulley $d_{dk}$ (mm) 71 | 75 | 80 | 90 | 100 | 112 | 118 | 125 | 140 | 160 | 180 | 200 | 224 | 250 | 280 | Additional power (kW) per belt for speed ratio i 1,01 to 1,05 | 1,06 to 1,26 | 1,27 to 1,57 | >1,57 |
|---|---|---|---|---|---|---|---|---|---|---|---|---|---|---|---|---|---|---|---|---|---|
| Statically balanced | | **700** | 0.97 | 1.14 | 1.35 | 1.76 | 2.17 | 2.66 | 2.90 | 3.18 | 3.78 | 4.57 | 5.35 | 6.13 | 7.05 | 8.04 | 9.17 | 0.02 | 0.13 | 0.19 | 0.23 |
| | | **950** | 1.25 | 1.47 | 1.75 | 2.29 | 2.84 | 3.48 | 3.81 | 4.18 | 4.97 | 6.02 | 7.06 | 8.08 | 9.29 | 10.58 | 12.05 | 0.03 | 0.18 | 0.26 | 0.31 |
| | | **1450** | 1.75 | 2.08 | 2.48 | 3.29 | 4.10 | 5.05 | 5.52 | 6.07 | 7.23 | 8.76 | 10.26 | 11.73 | 13.45 | 15.27 | 17.30 | 0.04 | 0.27 | 0.39 | 0.48 |
| | | **2850** | 2.88 | 3.49 | 4.23 | 5.71 | 7.16 | 8.86 | 9.70 | 10.66 | 12.67 | 15.23 | 17.65 | 19.92 | 22.43 | 24.85 | 27.23 | 0.08 | 0.54 | 0.77 | 0.94 |
| | | 100 | 0.19 | 0.21 | 0.25 | 0.31 | 0.38 | 0.46 | 0.49 | 0.54 | 0.64 | 0.76 | 0.89 | 1.02 | 1.17 | 1.33 | 1.51 | 0.00 | 0.02 | 0.03 | 0.03 |
| | | 200 | 0.34 | 0.39 | 0.46 | 0.58 | 0.71 | 0.86 | 0.93 | 1.02 | 1.20 | 1.45 | 1.69 | 1.93 | 2.22 | 2.53 | 2.89 | 0.01 | 0.04 | 0.05 | 0.07 |
| | | 300 | 0.48 | 0.56 | 0.65 | 0.83 | 1.02 | 1.24 | 1.35 | 1.48 | 1.75 | 2.11 | 2.46 | 2.82 | 3.24 | 3.69 | 4.21 | 0.01 | 0.06 | 0.08 | 0.10 |
| | | 400 | 0.61 | 0.71 | 0.83 | 1.08 | 1.32 | 1.61 | 1.75 | 1.92 | 2.27 | 2.74 | 3.21 | 3.67 | 4.22 | 4.82 | 5.49 | 0.01 | 0.08 | 0.11 | 0.13 |
| | | 500 | 0.74 | 0.86 | 1.01 | 1.31 | 1.61 | 1.96 | 2.14 | 2.35 | 2.78 | 3.36 | 3.94 | 4.51 | 5.19 | 5.91 | 6.75 | 0.01 | 0.09 | 0.13 | 0.16 |
| | | 600 | 0.86 | 1.00 | 1.18 | 1.54 | 1.89 | 2.31 | 2.52 | 2.77 | 3.29 | 3.97 | 4.65 | 5.33 | 6.13 | 6.99 | 7.97 | 0.02 | 0.11 | 0.16 | 0.20 |
| | | 700 | 0.97 | 1.14 | 1.35 | 1.76 | 2.17 | 2.66 | 2.90 | 3.18 | 3.78 | 4.57 | 5.35 | 6.13 | 7.05 | 8.04 | 9.17 | 0.02 | 0.13 | 0.19 | 0.23 |
| | | 800 | 1.09 | 1.28 | 1.51 | 1.98 | 2.44 | 2.99 | 3.27 | 3.58 | 4.26 | 5.16 | 6.04 | 6.92 | 7.96 | 9.07 | 10.34 | 0.02 | 0.15 | 0.22 | 0.26 |
| | | 900 | 1.20 | 1.41 | 1.67 | 2.19 | 2.71 | 3.32 | 3.63 | 3.98 | 4.74 | 5.74 | 6.72 | 7.70 | 8.85 | 10.09 | 11.49 | 0.03 | 0.17 | 0.24 | 0.30 |
| | | 1000 | 1.30 | 1.53 | 1.82 | 2.40 | 2.97 | 3.65 | 3.98 | 4.37 | 5.21 | 6.30 | 7.39 | 8.46 | 9.73 | 11.08 | 12.61 | 0.03 | 0.19 | 0.27 | 0.33 |
| | | 1100 | 1.41 | 1.66 | 1.98 | 2.60 | 3.23 | 3.97 | 4.33 | 4.76 | 5.67 | 6.86 | 8.04 | 9.21 | 10.58 | 12.05 | 13.70 | 0.03 | 0.21 | 0.30 | 0.36 |
| | | 1200 | 1.51 | 1.78 | 2.12 | 2.80 | 3.48 | 4.28 | 4.68 | 5.14 | 6.12 | 7.42 | 8.69 | 9.94 | 11.42 | 13.00 | 14.77 | 0.04 | 0.23 | 0.32 | 0.40 |
| | 5 | 1300 | 1.61 | 1.90 | 2.27 | 3.00 | 3.73 | 4.59 | 5.02 | 5.52 | 6.57 | 7.96 | 9.32 | 10.67 | 12.25 | 13.92 | 15.80 | 0.04 | 0.25 | 0.35 | 0.43 |
| | | 1400 | 1.70 | 2.02 | 2.41 | 3.20 | 3.97 | 4.90 | 5.35 | 5.89 | 7.01 | 8.49 | 9.95 | 11.38 | 13.05 | 14.83 | 16.81 | 0.04 | 0.27 | 0.38 | 0.46 |
| | | 1500 | 1.80 | 2.13 | 2.55 | 3.39 | 4.22 | 5.20 | 5.69 | 6.25 | 7.45 | 9.02 | 10.56 | 12.07 | 13.84 | 15.71 | 17.79 | 0.04 | 0.28 | 0.40 | 0.49 |
| | | 1600 | 1.89 | 2.25 | 2.69 | 3.58 | 4.46 | 5.50 | 6.01 | 6.61 | 7.88 | 9.54 | 11.16 | 12.75 | 14.61 | 16.56 | 18.73 | 0.05 | 0.30 | 0.43 | 0.53 |
| | | 1700 | 1.98 | 2.36 | 2.83 | 3.76 | 4.69 | 5.79 | 6.33 | 6.96 | 8.30 | 10.05 | 11.75 | 13.42 | 15.36 | 17.40 | 19.64 | 0.05 | 0.32 | 0.46 | 0.56 |
| | | 1800 | 2.07 | 2.47 | 2.96 | 3.95 | 4.92 | 6.08 | 6.65 | 7.31 | 8.72 | 10.55 | 12.33 | 14.07 | 16.09 | 18.20 | 20.52 | 0.05 | 0.34 | 0.48 | 0.59 |
| | | 1900 | 2.15 | 2.57 | 3.09 | 4.13 | 5.15 | 6.36 | 6.96 | 7.66 | 9.12 | 11.04 | 12.90 | 14.71 | 16.81 | 18.98 | 21.35 | 0.06 | 0.36 | 0.51 | 0.63 |
| | | 2000 | 2.24 | 2.68 | 3.22 | 4.31 | 5.38 | 6.64 | 7.27 | 8.00 | 9.53 | 11.52 | 13.46 | 15.33 | 17.50 | 19.73 | 22.16 | 0.06 | 0.38 | 0.54 | 0.66 |
| | | 2100 | 2.32 | 2.78 | 3.35 | 4.48 | 5.60 | 6.92 | 7.57 | 8.33 | 9.92 | 11.99 | 14.00 | 15.94 | 18.17 | 20.45 | 22.92 | 0.06 | 0.40 | 0.56 | 0.69 |
| | | 2200 | 2.40 | 2.88 | 3.48 | 4.65 | 5.82 | 7.19 | 7.87 | 8.66 | 10.31 | 12.46 | 14.53 | 16.53 | 18.81 | 21.15 | 23.64 | 0.06 | 0.42 | 0.59 | 0.73 |
| | | 2300 | 2.48 | 2.98 | 3.60 | 4.82 | 6.03 | 7.46 | 8.17 | 8.98 | 10.69 | 12.91 | 15.05 | 17.10 | 19.44 | 21.81 | 24.32 | 0.07 | 0.44 | 0.62 | 0.76 |
| | | 2400 | 2.56 | 3.07 | 3.72 | 4.99 | 6.25 | 7.73 | 8.46 | 9.30 | 11.07 | 13.36 | 15.55 | 17.65 | 20.04 | 22.44 | 24.96 | 0.07 | 0.45 | 0.65 | 0.79 |
| | | 2500 | 2.63 | 3.17 | 3.84 | 5.16 | 6.46 | 7.99 | 8.74 | 9.61 | 11.44 | 13.79 | 16.04 | 18.19 | 20.62 | 23.04 | 25.55 | 0.07 | 0.47 | 0.67 | 0.82 |
| | | 2600 | 2.71 | 3.26 | 3.95 | 5.32 | 6.66 | 8.24 | 9.02 | 9.92 | 11.80 | 14.22 | 16.52 | 18.71 | 21.17 | 23.60 | 26.09 | 0.08 | 0.49 | 0.70 | 0.86 |
| | 10 | 2700 | 2.78 | 3.35 | 4.07 | 5.48 | 6.86 | 8.49 | 9.29 | 10.22 | 12.15 | 14.63 | 16.99 | 19.21 | 21.69 | 24.13 | 26.58 | 0.08 | 0.51 | 0.73 | 0.89 |
| | | 2800 | 2.85 | 3.44 | 4.18 | 5.63 | 7.06 | 8.74 | 9.56 | 10.51 | 12.50 | 15.03 | 17.43 | 19.69 | 22.19 | 24.62 | 27.03 | 0.08 | 0.53 | 0.75 | 0.92 |
| | | 2900 | 2.92 | 3.53 | 4.29 | 5.79 | 7.26 | 8.98 | 9.83 | 10.80 | 12.83 | 15.42 | 17.87 | 20.15 | 22.66 | 25.08 | 27.42 | 0.08 | 0.55 | 0.78 | 0.96 |
| | | 3000 | 2.98 | 3.62 | 4.40 | 5.94 | 7.45 | 9.22 | 10.09 | 11.09 | 13.16 | 15.81 | 18.29 | 20.59 | 23.11 | 25.49 | 27.77 | 0.09 | 0.57 | 0.81 | 0.99 |
| | | 3100 | 3.05 | 3.70 | 4.50 | 6.09 | 7.64 | 9.45 | 10.34 | 11.36 | 13.49 | 16.18 | 18.69 | 21.01 | 23.52 | 25.87 | | 0.09 | 0.59 | 0.83 | 1.02 |
| | | 3200 | 3.11 | 3.78 | 4.61 | 6.23 | 7.82 | 9.68 | 10.59 | 11.63 | 13.80 | 16.53 | 19.08 | 21.41 | 23.91 | 26.21 | | 0.09 | 0.61 | 0.86 | 1.05 |
| | | 3300 | 3.18 | 3.86 | 4.71 | 6.38 | 8.00 | 9.91 | 10.83 | 11.90 | 14.11 | 16.88 | 19.44 | 21.78 | 24.26 | 26.50 | | 0.10 | 0.63 | 0.89 | 1.09 |
| | | 3400 | 3.24 | 3.94 | 4.81 | 6.52 | 8.18 | 10.13 | 11.07 | 12.16 | 14.40 | 17.21 | 19.80 | 22.14 | 24.58 | 26.75 | | 0.10 | 0.64 | 0.91 | 1.12 |
| | | 3500 | 3.30 | 4.02 | 4.91 | 6.65 | 8.36 | 10.34 | 11.31 | 12.41 | 14.69 | 17.53 | 20.13 | 22.46 | 24.87 | 26.96 | | 0.10 | 0.66 | 0.94 | 1.15 |
| | | 3600 | 3.35 | 4.09 | 5.00 | 6.79 | 8.53 | 10.55 | 11.53 | 12.66 | 14.97 | 17.84 | 20.45 | 22.77 | 25.13 | | | 0.11 | 0.68 | 0.97 | 1.19 |
| | | 3700 | 3.41 | 4.16 | 5.09 | 6.92 | 8.69 | 10.75 | 11.75 | 12.89 | 15.24 | 18.14 | 20.75 | 23.05 | 25.36 | | | 0.11 | 0.70 | 0.99 | 1.22 |
| | | 3800 | 3.46 | 4.23 | 5.18 | 7.05 | 8.86 | 10.95 | 11.97 | 13.13 | 15.50 | 18.42 | 21.03 | 23.31 | 25.55 | | | 0.11 | 0.72 | 1.02 | 1.25 |
| | | 3900 | 3.52 | 4.30 | 5.27 | 7.17 | 9.01 | 11.15 | 12.18 | 13.35 | 15.75 | 18.69 | 21.29 | 23.54 | 25.70 | | | 0.11 | 0.74 | 1.05 | 1.29 |
| | 15 | 4000 | 3.57 | 4.37 | 5.36 | 7.29 | 9.17 | 11.33 | 12.38 | 13.57 | 15.99 | 18.94 | 21.54 | 23.74 | 25.82 | | | 0.12 | 0.76 | 1.08 | 1.32 |
| | | 4100 | 3.62 | 4.43 | 5.44 | 7.41 | 9.32 | 11.52 | 12.58 | 13.78 | 16.23 | 19.18 | 21.76 | 23.92 | | | | 0.12 | 0.78 | 1.10 | 1.35 |
| | | 4200 | 3.66 | 4.50 | 5.52 | 7.53 | 9.47 | 11.70 | 12.77 | 13.98 | 16.45 | 19.41 | 21.96 | 24.07 | | | | 0.12 | 0.80 | 1.13 | 1.38 |
| | | 4300 | 3.71 | 4.56 | 5.60 | 7.64 | 9.61 | 11.87 | 12.95 | 14.18 | 16.66 | 19.62 | 22.15 | 24.19 | | | | 0.13 | 0.81 | 1.16 | 1.42 |
| | | 4400 | 3.75 | 4.61 | 5.68 | 7.75 | 9.75 | 12.04 | 13.13 | 14.37 | 16.86 | 19.82 | 22.31 | 24.28 | | | | 0.13 | 0.83 | 1.18 | 1.45 |
| | | 4500 | 3.79 | 4.67 | 5.75 | 7.86 | 9.88 | 12.20 | 13.30 | 14.55 | 17.05 | 20.00 | 22.45 | 24.35 | | | | 0.13 | 0.85 | 1.21 | 1.48 |
| | | 4600 | 3.83 | 4.73 | 5.82 | 7.96 | 10.01 | 12.35 | 13.47 | 14.72 | 17.23 | 20.16 | 22.56 | | | | | 0.13 | 0.87 | 1.24 | 1.52 |
| | | 4700 | 3.87 | 4.78 | 5.89 | 8.06 | 10.14 | 12.50 | 13.63 | 14.89 | 17.40 | 20.31 | 22.66 | | | | | 0.14 | 0.89 | 1.26 | 1.55 |
| | | 4800 | 3.91 | 4.83 | 5.96 | 8.16 | 10.26 | 12.64 | 13.78 | 15.05 | 17.56 | 20.44 | 22.73 | | | | | 0.14 | 0.91 | 1.29 | 1.58 |
| | | 4900 | 3.94 | 4.88 | 6.03 | 8.25 | 10.38 | 12.78 | 13.92 | 15.19 | 17.71 | 20.56 | 22.78 | | | | | 0.14 | 0.93 | 1.32 | 1.62 |
| | | 5000 | 3.97 | 4.92 | 6.09 | 8.34 | 10.49 | 12.91 | 14.06 | 15.33 | 17.84 | 20.66 | 22.81 | | | | | 0.15 | 0.95 | 1.34 | 1.65 |
| | | 5100 | 4.00 | 4.97 | 6.15 | 8.43 | 10.60 | 13.04 | 14.19 | 15.47 | 17.97 | 20.74 | | | | | | 0.15 | 0.97 | 1.37 | 1.68 |
| | | 5200 | 4.03 | 5.01 | 6.20 | 8.51 | 10.70 | 13.16 | 14.31 | 15.59 | 18.08 | 20.81 | | | | | | 0.15 | 0.98 | 1.40 | 1.71 |
| | 20 | 5300 | 4.06 | 5.05 | 6.26 | 8.59 | 10.80 | 13.27 | 14.42 | 15.70 | 18.18 | 20.85 | | | | | | 0.16 | 1.00 | 1.42 | 1.75 |
| | | 5400 | 4.08 | 5.09 | 6.31 | 8.67 | 10.89 | 13.37 | 14.53 | 15.81 | 18.27 | 20.88 | | | | | | 0.16 | 1.02 | 1.45 | 1.78 |
| | | 5500 | 4.11 | 5.12 | 6.36 | 8.74 | 10.98 | 13.47 | 14.63 | 15.91 | 18.34 | 20.89 | | | | | | 0.16 | 1.04 | 1.48 | 1.81 |
| | | 5600 | 4.13 | 5.15 | 6.41 | 8.81 | 11.06 | 13.56 | 14.72 | 15.99 | 18.40 | | | | | | | 0.16 | 1.06 | 1.51 | 1.85 |
| | | 5700 | 4.15 | 5.18 | 6.45 | 8.87 | 11.14 | 13.65 | 14.81 | 16.07 | 18.45 | | | | | | | 0.17 | 1.08 | 1.53 | 1.88 |
| | | 5800 | 4.16 | 5.21 | 6.49 | 8.93 | 11.22 | 13.73 | 14.88 | 16.14 | 18.49 | | | | | | | 0.17 | 1.10 | 1.56 | 1.91 |
| | | 5900 | 4.18 | 5.24 | 6.53 | 8.99 | 11.28 | 13.80 | 14.95 | 16.20 | 18.51 | | | | | | | 0.17 | 1.12 | 1.59 | 1.94 |
| | | 6000 | 4.19 | 5.26 | 6.56 | 9.04 | 11.35 | 13.86 | 15.01 | 16.25 | 18.52 | | | | | | | 0.18 | 1.14 | 1.61 | 1.98 |
| | | 6100 | 4.20 | 5.28 | 6.59 | 9.09 | 11.41 | 13.92 | 15.06 | 16.29 | 18.52 | | | | | | | 0.18 | 1.16 | 1.64 | 2.01 |
| | | 6200 | 4.21 | 5.30 | 6.62 | 9.14 | 11.46 | 13.97 | 15.10 | 16.32 | 18.50 | | | | | | | 0.18 | 1.17 | 1.67 | 2.04 |
| | | 6300 | 4.22 | 5.32 | 6.65 | 9.18 | 11.51 | 14.01 | 15.14 | 16.34 | 18.47 | | | | | | | 0.18 | 1.19 | 1.69 | 2.08 |
| | | 6400 | 4.22 | 5.33 | 6.67 | 9.22 | 11.55 | 14.05 | 15.16 | 16.35 | 18.42 | | | | | | | 0.19 | 1.21 | 1.72 | 2.11 |
| | | 6500 | 4.22 | 5.34 | 6.69 | 9.25 | 11.58 | 14.07 | 15.18 | 16.34 | 18.36 | | | | | | | 0.19 | 1.23 | 1.75 | 2.14 |
| | | 6600 | 4.22 | 5.35 | 6.71 | 9.28 | 11.62 | 14.09 | 15.19 | 16.33 | | | | | | | | 0.19 | 1.25 | 1.77 | 2.18 |
| | 25 | 6700 | 4.22 | 5.36 | 6.73 | 9.30 | 11.64 | 14.10 | 15.18 | 16.31 | | | | | | | | 0.20 | 1.27 | 1.80 | 2.21 |
| | | 6800 | 4.22 | 5.36 | 6.74 | 9.32 | 11.66 | 14.11 | 15.17 | 16.28 | | | | | | | | 0.20 | 1.29 | 1.83 | 2.24 |
| | | 6900 | 4.21 | 5.36 | 6.75 | 9.34 | 11.67 | 14.10 | 15.15 | 16.23 | | | | | | | | 0.20 | 1.31 | 1.86 | 2.27 |
| | | 7000 | 4.20 | 5.36 | 6.75 | 9.35 | 11.68 | 14.09 | 15.12 | 16.18 | | | | | | | | 0.21 | 1.33 | 1.88 | 2.31 |
| | | | | | | 30 | 35 | 40 | | | | | | | | | | | | | |
| | | | | | | Dynamically balanced (for details see DIN 2211) | | | | | | | | | | | | | | | |

Where v > 42 m/s, please consult our Applications Engineering Department

v (m/s)

Pulleys

SUPER TX

# Power Ratings

## optibelt SUPER TX M=S Section XPB, 5VX

## Nominal Power Rating $P_N$ (kW) for $\beta$ = 180° and $L_d$ = 3550 mm

*Table 38*

| Pulleys | v (m/s) | $n_k$ (min$^{-1}$) | Datum diameter of small pulley $d_{dk}$ (mm) 112 | 118 | 125 | 132 | 140 | 150 | 160 | 180 | 200 | 224 | 250 | 280 | 315 | 355 | 400 | Additional power (kW) per belt for speed ratio i 1,01 to 1,05 | 1,06 to 1,26 | 1,27 to 1,57 | >1,57 |
|---|---|---|---|---|---|---|---|---|---|---|---|---|---|---|---|---|---|---|---|---|---|
| Statically balanced | | **700** | 2.87 | 3.26 | 3.71 | 4.16 | 4.68 | 5.32 | 5.96 | 7.24 | 8.50 | 10.01 | 11.64 | 13.50 | 15.65 | 18.07 | 20.76 | 0.04 | 0.29 | 0.41 | 0.50 |
| | | **950** | 3.79 | 4.31 | 4.91 | 5.52 | 6.21 | 7.07 | 7.92 | 9.62 | 11.31 | 13.31 | 15.46 | 17.91 | 20.72 | 23.87 | 27.33 | 0.06 | 0.39 | 0.55 | 0.68 |
| | | **1450** | 5.52 | 6.30 | 7.20 | 8.10 | 9.12 | 10.39 | 11.65 | 14.15 | 16.61 | 19.52 | 22.60 | 26.06 | 29.97 | 34.25 | 38.79 | 0.09 | 0.59 | 0.84 | 1.03 |
| | | **2850** | 9.74 | 11.15 | 12.78 | 14.38 | 16.20 | 18.42 | 20.60 | 24.81 | 28.80 | 33.28 | 37.71 | 42.21 | 46.56 | | | 0.18 | 1.17 | 1.65 | 2.03 |
| | | 100 | 0.48 | 0.54 | 0.61 | 0.67 | 0.75 | 0.85 | 0.95 | 1.14 | 1.34 | 1.57 | 1.82 | 2.11 | 2.45 | 2.83 | 3.26 | 0.01 | 0.04 | 0.06 | 0.07 |
| | | 200 | 0.91 | 1.02 | 1.16 | 1.29 | 1.45 | 1.64 | 1.83 | 2.21 | 2.59 | 3.05 | 3.54 | 4.11 | 4.76 | 5.51 | 6.35 | 0.01 | 0.08 | 0.12 | 0.14 |
| | | 300 | 1.32 | 1.49 | 1.69 | 1.89 | 2.12 | 2.40 | 2.69 | 3.25 | 3.82 | 4.49 | 5.22 | 6.05 | 7.02 | 8.12 | 9.35 | 0.02 | 0.12 | 0.17 | 0.21 |
| | | 400 | 1.72 | 1.95 | 2.21 | 2.47 | 2.78 | 3.15 | 3.53 | 4.27 | 5.01 | 5.90 | 6.86 | 7.96 | 9.23 | 10.68 | 12.30 | 0.03 | 0.16 | 0.23 | 0.28 |
| | | 500 | 2.11 | 2.39 | 2.72 | 3.05 | 3.42 | 3.89 | 4.35 | 5.27 | 6.19 | 7.29 | 8.48 | 9.84 | 11.41 | 13.19 | 15.18 | 0.03 | 0.20 | 0.29 | 0.36 |
| | | 600 | 2.49 | 2.83 | 3.22 | 3.61 | 4.05 | 4.61 | 5.16 | 6.26 | 7.36 | 8.66 | 10.07 | 11.68 | 13.55 | 15.66 | 18.00 | 0.04 | 0.25 | 0.35 | 0.43 |
| | | 700 | 2.87 | 3.26 | 3.71 | 4.16 | 4.68 | 5.32 | 5.96 | 7.24 | 8.50 | 10.01 | 11.64 | 13.50 | 15.65 | 18.07 | 20.76 | 0.04 | 0.29 | 0.41 | 0.50 |
| | 5 | 800 | 3.24 | 3.68 | 4.20 | 4.71 | 5.30 | 6.03 | 6.75 | 8.20 | 9.64 | 11.35 | 13.19 | 15.29 | 17.71 | 20.43 | 23.45 | 0.05 | 0.33 | 0.46 | 0.57 |
| | | 900 | 3.61 | 4.10 | 4.68 | 5.25 | 5.91 | 6.72 | 7.53 | 9.15 | 10.75 | 12.66 | 14.71 | 17.04 | 19.73 | 22.74 | 26.06 | 0.06 | 0.37 | 0.52 | 0.64 |
| | | 1000 | 3.97 | 4.51 | 5.15 | 5.78 | 6.51 | 7.41 | 8.30 | 10.09 | 11.85 | 13.95 | 16.20 | 18.76 | 21.70 | 24.99 | 28.59 | 0.06 | 0.41 | 0.58 | 0.71 |
| | | 1100 | 4.32 | 4.92 | 5.62 | 6.31 | 7.10 | 8.09 | 9.07 | 11.01 | 12.94 | 15.23 | 17.67 | 20.45 | 23.63 | 27.17 | 31.03 | 0.07 | 0.45 | 0.64 | 0.78 |
| | | 1200 | 4.67 | 5.32 | 6.08 | 6.83 | 7.69 | 8.76 | 9.82 | 11.93 | 14.01 | 16.48 | 19.12 | 22.10 | 25.51 | 29.29 | 33.38 | 0.08 | 0.49 | 0.70 | 0.85 |
| | | 1300 | 5.02 | 5.72 | 6.53 | 7.34 | 8.27 | 9.42 | 10.56 | 12.83 | 15.06 | 17.71 | 20.53 | 23.72 | 27.34 | 31.33 | 35.63 | 0.08 | 0.53 | 0.75 | 0.93 |
| | | 1400 | 5.36 | 6.11 | 6.98 | 7.85 | 8.84 | 10.07 | 11.29 | 13.71 | 16.10 | 18.92 | 21.92 | 25.29 | 29.11 | 33.30 | 37.77 | 0.09 | 0.57 | 0.81 | 1.00 |
| | | 1500 | 5.69 | 6.49 | 7.42 | 8.35 | 9.40 | 10.71 | 12.01 | 14.59 | 17.12 | 20.11 | 23.27 | 26.83 | 30.82 | 35.18 | 39.79 | 0.09 | 0.61 | 0.87 | 1.07 |
| | | 1600 | 6.02 | 6.87 | 7.86 | 8.84 | 9.96 | 11.35 | 12.73 | 15.45 | 18.12 | 21.27 | 24.59 | 28.31 | 32.48 | 36.98 | 41.70 | 0.10 | 0.65 | 0.93 | 1.14 |
| | 10 | 1700 | 6.35 | 7.25 | 8.29 | 9.33 | 10.51 | 11.97 | 13.43 | 16.29 | 19.11 | 22.41 | 25.88 | 29.75 | 34.06 | 38.69 | 43.47 | 0.11 | 0.70 | 0.99 | 1.21 |
| | | 1800 | 6.67 | 7.62 | 8.72 | 9.81 | 11.05 | 12.59 | 14.12 | 17.12 | 20.07 | 23.52 | 27.13 | 31.15 | 35.58 | 40.30 | 45.12 | 0.11 | 0.74 | 1.05 | 1.28 |
| | | 1900 | 6.99 | 7.98 | 9.14 | 10.28 | 11.58 | 13.20 | 14.79 | 17.94 | 21.01 | 24.60 | 28.35 | 32.49 | 37.03 | 41.82 | 46.61 | 0.12 | 0.78 | 1.10 | 1.35 |
| | | 2000 | 7.30 | 8.34 | 9.55 | 10.75 | 12.11 | 13.79 | 15.46 | 18.74 | 21.93 | 25.65 | 29.52 | 33.77 | 38.40 | 43.22 | 47.96 | 0.13 | 0.82 | 1.16 | 1.42 |
| | | 2100 | 7.61 | 8.69 | 9.95 | 11.21 | 12.62 | 14.38 | 16.12 | 19.52 | 22.83 | 26.67 | 30.66 | 35.00 | 39.70 | 44.52 | 49.16 | 0.13 | 0.86 | 1.22 | 1.50 |
| | | 2200 | 7.91 | 9.04 | 10.35 | 11.66 | 13.13 | 14.96 | 16.76 | 20.29 | 23.71 | 27.67 | 31.75 | 36.18 | 40.91 | 45.69 | 50.18 | 0.14 | 0.90 | 1.28 | 1.57 |
| | | 2300 | 8.20 | 9.38 | 10.75 | 12.10 | 13.63 | 15.52 | 17.39 | 21.03 | 24.56 | 28.63 | 32.80 | 37.29 | 42.04 | 46.75 | | 0.15 | 0.94 | 1.34 | 1.64 |
| | | 2400 | 8.50 | 9.72 | 11.13 | 12.53 | 14.12 | 16.08 | 18.00 | 21.76 | 25.39 | 29.55 | 33.80 | 38.34 | 43.08 | 47.69 | | 0.15 | 0.98 | 1.39 | 1.71 |
| | 15 | 2500 | 8.78 | 10.05 | 11.51 | 12.96 | 14.60 | 16.62 | 18.61 | 22.48 | 26.20 | 30.45 | 34.76 | 39.32 | 44.02 | 48.49 | | 0.16 | 1.02 | 1.45 | 1.78 |
| | | 2600 | 9.06 | 10.37 | 11.88 | 13.38 | 15.07 | 17.15 | 19.19 | 23.17 | 26.97 | 31.30 | 35.67 | 40.24 | 44.87 | | | 0.16 | 1.06 | 1.51 | 1.85 |
| | | 2700 | 9.34 | 10.69 | 12.25 | 13.79 | 15.53 | 17.67 | 19.77 | 23.84 | 27.73 | 32.12 | 36.52 | 41.08 | 45.62 | | | 0.17 | 1.10 | 1.57 | 1.92 |
| | | 2800 | 9.61 | 11.00 | 12.60 | 14.19 | 15.98 | 18.17 | 20.33 | 24.49 | 28.45 | 32.90 | 37.32 | 41.85 | 46.27 | | | 0.18 | 1.15 | 1.63 | 1.99 |
| | | 2900 | 9.87 | 11.30 | 12.95 | 14.58 | 16.41 | 18.67 | 20.87 | 25.12 | 29.14 | 33.64 | 38.07 | 42.55 | 46.81 | | | 0.18 | 1.19 | 1.68 | 2.06 |
| | | 3000 | 10.13 | 11.60 | 13.29 | 14.96 | 16.84 | 19.15 | 21.40 | 25.73 | 29.81 | 34.34 | 38.77 | 43.17 | | | | 0.19 | 1.23 | 1.74 | 2.14 |
| | | 3100 | 10.38 | 11.89 | 13.62 | 15.33 | 17.26 | 19.61 | 21.91 | 26.32 | 30.45 | 35.00 | 39.40 | | | | | 0.20 | 1.27 | 1.80 | 2.21 |
| | | 3200 | 10.62 | 12.17 | 13.95 | 15.70 | 17.66 | 20.07 | 22.41 | 26.88 | 31.05 | 35.62 | 39.98 | | | | | 0.20 | 1.31 | 1.86 | 2.28 |
| | | 3300 | 10.86 | 12.44 | 14.26 | 16.05 | 18.06 | 20.51 | 22.89 | 27.42 | 31.62 | 36.19 | 40.49 | | | | | 0.21 | 1.35 | 1.92 | 2.35 |
| | 20 | 3400 | 11.09 | 12.71 | 14.57 | 16.39 | 18.44 | 20.93 | 23.35 | 27.93 | 32.16 | 36.72 | 40.94 | | | | | 0.22 | 1.39 | 1.97 | 2.42 |
| | | 3500 | 11.32 | 12.97 | 14.87 | 16.73 | 18.81 | 21.34 | 23.79 | 28.42 | 32.67 | 37.19 | 41.33 | | | | | 0.22 | 1.43 | 2.03 | 2.49 |
| | | 3600 | 11.54 | 13.22 | 15.15 | 17.05 | 19.17 | 21.74 | 24.22 | 28.89 | 33.14 | 37.62 | | | | | | 0.23 | 1.47 | 2.09 | 2.56 |
| | | 3700 | 11.75 | 13.47 | 15.43 | 17.36 | 19.51 | 22.12 | 24.62 | 29.32 | 33.57 | 38.00 | | | | | | 0.23 | 1.51 | 2.15 | 2.63 |
| | | 3800 | 11.95 | 13.70 | 15.70 | 17.66 | 19.84 | 22.48 | 25.01 | 29.74 | 33.97 | 38.33 | | | | | | 0.24 | 1.55 | 2.21 | 2.71 |
| | | 3900 | 12.15 | 13.93 | 15.96 | 17.95 | 20.16 | 22.82 | 25.38 | 30.12 | 34.33 | 38.61 | | | | | | 0.25 | 1.60 | 2.26 | 2.78 |
| | | 4000 | 12.34 | 14.15 | 16.21 | 18.23 | 20.46 | 23.16 | 25.73 | 30.47 | 34.65 | 38.84 | | | | | | 0.25 | 1.64 | 2.32 | 2.85 |
| | | 4100 | 12.52 | 14.36 | 16.45 | 18.49 | 20.75 | 23.47 | 26.05 | 30.80 | 34.94 | | | | | | | 0.26 | 1.68 | 2.38 | 2.92 |
| | 25 | 4200 | 12.70 | 14.56 | 16.68 | 18.75 | 21.03 | 23.76 | 26.36 | 31.10 | 35.18 | | | | | | | 0.27 | 1.72 | 2.44 | 2.99 |
| | | 4300 | 12.87 | 14.75 | 16.90 | 18.99 | 21.29 | 24.04 | 26.64 | 31.37 | 35.38 | | | | | | | 0.27 | 1.76 | 2.50 | 3.06 |
| | | 4400 | 13.03 | 14.94 | 17.11 | 19.22 | 21.54 | 24.30 | 26.91 | 31.60 | 35.54 | | | | | | | 0.28 | 1.80 | 2.56 | 3.13 |
| | | 4500 | 13.18 | 15.11 | 17.31 | 19.43 | 21.77 | 24.54 | 27.15 | 31.81 | 35.66 | | | | | | | 0.28 | 1.84 | 2.61 | 3.20 |
| | | 4600 | 13.32 | 15.28 | 17.49 | 19.63 | 21.98 | 24.76 | 27.36 | 31.98 | | | | | | | | 0.29 | 1.88 | 2.67 | 3.28 |
| | | 4700 | 13.46 | 15.43 | 17.67 | 19.82 | 22.18 | 24.97 | 27.56 | 32.12 | | | | | | | | 0.30 | 1.92 | 2.73 | 3.35 |
| | | 4800 | 13.58 | 15.58 | 17.83 | 20.00 | 22.37 | 25.15 | 27.73 | 32.22 | | | | | | | | 0.30 | 1.96 | 2.79 | 3.42 |
| | | 4900 | 13.70 | 15.71 | 17.98 | 20.16 | 22.53 | 25.31 | 27.88 | 32.30 | | | | | | | | 0.31 | 2.00 | 2.85 | 3.49 |
| | | 5000 | 13.81 | 15.84 | 18.12 | 20.31 | 22.68 | 25.46 | 28.00 | 32.33 | | | | | | | | 0.32 | 2.05 | 2.90 | 3.56 |
| | 30 | 5100 | 13.91 | 15.95 | 18.25 | 20.44 | 22.82 | 25.58 | 28.10 | | | | | | | | | 0.32 | 2.09 | 2.96 | 3.63 |
| | | 5200 | 14.00 | 16.06 | 18.36 | 20.56 | 22.93 | 25.68 | 28.17 | | | | | | | | | 0.33 | 2.13 | 3.02 | 3.70 |
| | | 5300 | 14.08 | 16.15 | 18.46 | 20.66 | 23.03 | 25.76 | 28.21 | | | | | | | | | 0.34 | 2.17 | 3.08 | 3.77 |
| | | 5400 | 14.15 | 16.23 | 18.55 | 20.75 | 23.11 | 25.82 | 28.23 | | | | | | | | | 0.34 | 2.21 | 3.14 | 3.84 |
| | | 5500 | 14.22 | 16.30 | 18.63 | 20.83 | 23.17 | 25.85 | 28.22 | | | | | | | | | 0.35 | 2.25 | 3.19 | 3.92 |
| | | 5600 | 14.27 | 16.36 | 18.69 | 20.88 | 23.22 | | | | | | | | | | | 0.35 | 2.29 | 3.25 | 3.99 |
| | | 5700 | 14.31 | 16.41 | 18.74 | 20.93 | 23.24 | | | | | | | | | | | 0.36 | 2.33 | 3.31 | 4.06 |
| | | 5800 | 14.34 | 16.45 | 18.77 | 20.95 | 23.25 | | | | | | | | | | | 0.37 | 2.37 | 3.37 | 4.13 |
| | 35 | 5900 | 14.37 | 16.47 | 18.80 | 20.96 | 23.24 | | | | | | | | | | | 0.37 | 2.41 | 3.43 | 4.20 |
| | | 6000 | 14.38 | 16.49 | 18.80 | 20.95 | 23.20 | | | | | | | | | | | 0.38 | 2.45 | 3.48 | 4.27 |
| | 40 | | | | | | | | | | | | | | | | | | | | v (m/s) |
| Dynamically balanced (for details see DIN 2211) | | | | | | | | | | | | | | | | | | | | | Pulleys |

Where v > 42 m/s, please consult our Applications Engineering Department



Note: Pulley diameters shown are outside diameters for sections 5VX.

# Power Ratings

## optibelt *SUPER TX M=S* Section XPC

## Nominal Power Rating $P_N$ (kW) for $\beta$ = 180° and $L_d$ = 5600 mm

*Table 39*

| Pulleys | v (m/s) | $n_k$ (min$^{-1}$) | Datum diameter of small pulley $d_{dk}$ (mm) 180 | 200 | 224 | 250 | 280 | 315 | 335 | 355 | 400 | 450 | 500 | 560 | 630 | 710 | Additional power (kW) per belt for speed ratio i 1,01 to 1,05 | 1,06 to 1,26 | 1,27 to 1,57 | >1,57 |
|---|---|---|---|---|---|---|---|---|---|---|---|---|---|---|---|---|---|---|---|---|
| Statically balanced | | **700** | 9.39 | 11.26 | 13.50 | 15.91 | 18.68 | 21.87 | 23.67 | 25.47 | 29.46 | 33.82 | 38.08 | 43.06 | 48.67 | 54.78 | 0.08 | 0.49 | 0.70 | 0.85 |
| | | **950** | 12.53 | 15.04 | 18.01 | 21.21 | 24.84 | 29.02 | 31.37 | 33.69 | 38.80 | 44.30 | 49.57 | 55.56 | 62.06 | 68.76 | 0.10 | 0.67 | 0.95 | 1.16 |
| | | **1450** | 18.50 | 22.16 | 26.46 | 31.02 | 36.13 | 41.86 | 45.02 | 48.08 | 54.61 | 61.20 | 67.03 | 72.90 | 78.01 | | 0.16 | 1.02 | 1.44 | 1.77 |
| | | **2850** | 31.92 | 37.66 | 43.99 | 50.10 | 56.06 | 61.37 | | | | | | | | | 0.31 | 2.00 | 2.84 | 3.48 |
| | | 50 | 0.73 | 0.87 | 1.04 | 1.23 | 1.44 | 1.69 | 1.83 | 1.97 | 2.28 | 2.64 | 2.99 | 3.40 | 3.89 | 4.45 | 0.01 | 0.04 | 0.05 | 0.06 |
| | | 100 | 1.43 | 1.71 | 2.05 | 2.41 | 2.83 | 3.32 | 3.60 | 3.88 | 4.50 | 5.20 | 5.89 | 6.71 | 7.68 | 8.77 | 0.01 | 0.07 | 0.10 | 0.12 |
| | | 150 | 2.12 | 2.54 | 3.04 | 3.59 | 4.21 | 4.94 | 5.35 | 5.76 | 6.69 | 7.72 | 8.75 | 9.98 | 11.41 | 13.03 | 0.02 | 0.11 | 0.15 | 0.18 |
| | | 200 | 2.81 | 3.36 | 4.03 | 4.74 | 5.57 | 6.53 | 7.08 | 7.63 | 8.86 | 10.22 | 11.58 | 13.21 | 15.09 | 17.24 | 0.02 | 0.14 | 0.20 | 0.24 |
| | | 250 | 3.48 | 4.17 | 5.00 | 5.90 | 6.92 | 8.12 | 8.80 | 9.48 | 11.01 | 12.70 | 14.39 | 16.40 | 18.73 | 21.38 | 0.03 | 0.18 | 0.25 | 0.31 |
| | | 300 | 4.15 | 4.98 | 5.97 | 7.04 | 8.27 | 9.70 | 10.51 | 11.32 | 13.14 | 15.16 | 17.16 | 19.56 | 22.32 | 25.46 | 0.03 | 0.21 | 0.30 | 0.37 |
| | | 350 | 4.82 | 5.78 | 6.93 | 8.17 | 9.60 | 11.26 | 12.20 | 13.15 | 15.26 | 17.59 | 19.91 | 22.67 | 25.86 | 29.47 | 0.04 | 0.25 | 0.35 | 0.43 |
| | | 400 | 5.49 | 6.58 | 7.89 | 9.30 | 10.92 | 12.81 | 13.88 | 14.95 | 17.35 | 20.00 | 22.62 | 25.74 | 29.34 | 33.39 | 0.04 | 0.28 | 0.40 | 0.49 |
| | | 450 | 6.14 | 7.37 | 8.84 | 10.42 | 12.24 | 14.35 | 15.55 | 16.75 | 19.43 | 22.38 | 25.30 | 28.77 | 32.76 | 37.23 | 0.05 | 0.32 | 0.45 | 0.55 |
| | 5 | 500 | 6.80 | 8.16 | 9.78 | 11.53 | 13.55 | 15.88 | 17.21 | 18.53 | 21.48 | 24.73 | 27.94 | 31.75 | 36.10 | 40.97 | 0.05 | 0.35 | 0.50 | 0.61 |
| | | 550 | 7.45 | 8.94 | 10.72 | 12.64 | 14.84 | 17.40 | 18.85 | 20.29 | 23.51 | 27.05 | 30.55 | 34.67 | 39.37 | 44.60 | 0.06 | 0.39 | 0.55 | 0.67 |
| | | 600 | 8.10 | 9.72 | 11.65 | 13.74 | 16.13 | 18.90 | 20.47 | 22.04 | 25.52 | 29.34 | 33.11 | 37.53 | 42.56 | 48.12 | 0.07 | 0.42 | 0.60 | 0.73 |
| | | 650 | 8.74 | 10.49 | 12.58 | 14.83 | 17.41 | 20.39 | 22.08 | 23.76 | 27.51 | 31.60 | 35.62 | 40.33 | 45.66 | 51.52 | 0.07 | 0.46 | 0.65 | 0.79 |
| | | 700 | 9.39 | 11.26 | 13.50 | 15.91 | 18.68 | 21.87 | 23.67 | 25.47 | 29.46 | 33.82 | 38.08 | 43.06 | 48.67 | 54.78 | 0.08 | 0.49 | 0.70 | 0.85 |
| | | 750 | 10.02 | 12.03 | 14.42 | 16.99 | 19.93 | 23.33 | 25.25 | 27.16 | 31.39 | 36.00 | 40.50 | 45.73 | 51.58 | 57.90 | 0.08 | 0.53 | 0.75 | 0.92 |
| | | 800 | 10.66 | 12.79 | 15.33 | 18.06 | 21.18 | 24.78 | 26.81 | 28.82 | 33.29 | 38.14 | 42.85 | 48.31 | 54.38 | 60.86 | 0.09 | 0.56 | 0.80 | 0.98 |
| | | 850 | 11.29 | 13.54 | 16.23 | 19.12 | 22.41 | 26.21 | 28.35 | 30.47 | 35.16 | 40.24 | 45.15 | 50.82 | 57.06 | 63.67 | 0.09 | 0.60 | 0.85 | 1.04 |
| | | 900 | 11.91 | 14.29 | 17.13 | 20.17 | 23.63 | 27.62 | 29.87 | 32.09 | 37.00 | 42.29 | 47.39 | 53.23 | 59.63 | 66.31 | 0.10 | 0.63 | 0.90 | 1.10 |
| | | 950 | 12.53 | 15.04 | 18.01 | 21.21 | 24.84 | 29.02 | 31.37 | 33.69 | 38.80 | 44.30 | 49.57 | 55.56 | 62.06 | 68.76 | 0.10 | 0.67 | 0.95 | 1.16 |
| | | 1000 | 13.15 | 15.77 | 18.90 | 22.24 | 26.04 | 30.40 | 32.84 | 35.26 | 40.57 | 46.25 | 51.67 | 57.80 | 64.37 | 71.03 | 0.11 | 0.70 | 1.00 | 1.22 |
| | 10 | 1050 | 13.76 | 16.51 | 19.77 | 23.26 | 27.22 | 31.76 | 34.30 | 36.81 | 42.30 | 48.15 | 53.71 | 59.93 | 66.53 | 73.09 | 0.11 | 0.74 | 1.05 | 1.28 |
| | | 1100 | 14.37 | 17.24 | 20.64 | 24.27 | 28.39 | 33.10 | 35.73 | 38.32 | 43.99 | 50.00 | 55.67 | 61.97 | 68.55 | 74.95 | 0.12 | 0.77 | 1.10 | 1.34 |
| | | 1150 | 14.98 | 17.96 | 21.49 | 25.27 | 29.54 | 34.42 | 37.14 | 39.81 | 45.64 | 51.79 | 57.55 | 63.89 | 70.42 | 76.59 | 0.12 | 0.81 | 1.15 | 1.40 |
| | | 1200 | 15.58 | 18.67 | 22.34 | 26.26 | 30.68 | 35.71 | 38.52 | 41.27 | 47.25 | 53.52 | 59.35 | 65.70 | 72.12 | 78.00 | 0.13 | 0.84 | 1.20 | 1.47 |
| | | 1250 | 16.17 | 19.38 | 23.19 | 27.23 | 31.81 | 36.99 | 39.88 | 42.70 | 48.82 | 55.19 | 61.07 | 67.39 | 73.66 | 79.17 | 0.14 | 0.88 | 1.25 | 1.53 |
| | | 1300 | 16.76 | 20.09 | 24.02 | 28.20 | 32.91 | 38.24 | 41.20 | 44.10 | 50.34 | 56.80 | 62.70 | 68.97 | 75.02 | | 0.14 | 0.91 | 1.29 | 1.59 |
| | | 1350 | 17.35 | 20.78 | 24.84 | 29.15 | 34.00 | 39.47 | 42.50 | 45.46 | 51.81 | 58.33 | 64.24 | 70.41 | 76.21 | | 0.15 | 0.95 | 1.34 | 1.65 |
| | | 1400 | 17.93 | 21.47 | 25.66 | 30.09 | 35.07 | 40.68 | 43.78 | 46.79 | 53.23 | 59.80 | 65.68 | 71.72 | 77.21 | | 0.15 | 0.98 | 1.39 | 1.71 |
| | | 1450 | 18.50 | 22.16 | 26.46 | 31.02 | 36.13 | 41.86 | 45.02 | 48.08 | 54.61 | 61.20 | 67.03 | 72.90 | 78.01 | | 0.16 | 1.02 | 1.44 | 1.77 |
| | 15 | 1500 | 19.07 | 22.83 | 27.26 | 31.93 | 37.16 | 43.02 | 46.23 | 49.34 | 55.93 | 62.52 | 68.28 | 73.93 | | | 0.16 | 1.05 | 1.49 | 1.83 |
| | | 1550 | 19.64 | 23.50 | 28.04 | 32.84 | 38.18 | 44.14 | 47.41 | 50.55 | 57.19 | 63.77 | 69.42 | | | | 0.17 | 1.09 | 1.54 | 1.89 |
| | | 1600 | 20.19 | 24.16 | 28.82 | 33.72 | 39.18 | 45.24 | 48.55 | 51.73 | 58.40 | 64.94 | 70.45 | | | | 0.17 | 1.12 | 1.59 | 1.95 |
| | | 1650 | 20.75 | 24.81 | 29.58 | 34.59 | 40.16 | 46.32 | 49.66 | 52.87 | 59.56 | 66.03 | 71.38 | | | | 0.18 | 1.16 | 1.64 | 2.02 |
| | | 1700 | 21.29 | 25.46 | 30.34 | 35.45 | 41.11 | 47.36 | 50.74 | 53.97 | 60.65 | 67.03 | 72.19 | | | | 0.18 | 1.19 | 1.69 | 2.08 |
| | | 1750 | 21.83 | 26.10 | 31.08 | 36.29 | 42.05 | 48.37 | 51.78 | 55.02 | 61.69 | 67.95 | 72.88 | | | | 0.19 | 1.23 | 1.74 | 2.14 |
| | | 1800 | 22.37 | 26.73 | 31.81 | 37.12 | 42.96 | 49.35 | 52.78 | 56.03 | 62.66 | 68.78 | | | | | 0.20 | 1.26 | 1.79 | 2.20 |
| | | 1850 | 22.90 | 27.35 | 32.53 | 37.93 | 43.85 | 50.30 | 53.75 | 57.00 | 63.57 | 69.52 | | | | | 0.20 | 1.30 | 1.84 | 2.26 |
| | | 1900 | 23.42 | 27.96 | 33.24 | 38.72 | 44.72 | 51.22 | 54.67 | 57.92 | 64.41 | 70.17 | | | | | 0.21 | 1.33 | 1.89 | 2.32 |
| | | 1950 | 23.93 | 28.56 | 33.93 | 39.50 | 45.56 | 52.10 | 55.56 | 58.79 | 65.18 | 70.72 | | | | | 0.21 | 1.37 | 1.94 | 2.38 |
| | | 2000 | 24.44 | 29.16 | 34.61 | 40.26 | 46.38 | 52.95 | 56.40 | 59.61 | 65.89 | 71.17 | | | | | 0.22 | 1.40 | 1.99 | 2.44 |
| | | 2050 | 24.95 | 29.74 | 35.28 | 41.00 | 47.18 | 53.77 | 57.21 | 60.39 | 66.52 | | | | | | 0.22 | 1.44 | 2.04 | 2.50 |
| | 20 | 2100 | 25.44 | 30.32 | 35.94 | 41.72 | 47.95 | 54.55 | 57.97 | 61.11 | 67.08 | | | | | | 0.23 | 1.47 | 2.09 | 2.56 |
| | | 2150 | 25.93 | 30.88 | 36.58 | 42.42 | 48.69 | 55.29 | 58.68 | 61.78 | 67.57 | | | | | | 0.23 | 1.51 | 2.14 | 2.63 |
| | | 2200 | 26.41 | 31.44 | 37.21 | 43.11 | 49.41 | 56.00 | 59.35 | 62.39 | 67.98 | | | | | | 0.24 | 1.54 | 2.19 | 2.69 |
| | | 2250 | 26.88 | 31.98 | 37.82 | 43.77 | 50.10 | 56.66 | 59.98 | 62.96 | 68.31 | | | | | | 0.24 | 1.58 | 2.24 | 2.75 |
| | | 2300 | 27.35 | 32.52 | 38.42 | 44.42 | 50.76 | 57.29 | 60.56 | | | | | | | | 0.25 | 1.61 | 2.29 | 2.81 |
| | | 2350 | 27.80 | 33.04 | 39.01 | 45.05 | 51.40 | 57.88 | 61.09 | | | | | | | | 0.26 | 1.65 | 2.34 | 2.87 |
| | | 2400 | 28.25 | 33.55 | 39.58 | 45.65 | 52.00 | 58.42 | 61.57 | | | | | | | | 0.26 | 1.68 | 2.39 | 2.93 |
| | | 2450 | 28.69 | 34.06 | 40.14 | 46.24 | 52.58 | 58.93 | 62.00 | | | | | | | | 0.27 | 1.72 | 2.44 | 2.99 |
| | | 2500 | 29.13 | 34.55 | 40.68 | 46.80 | 53.13 | 59.39 | 62.38 | | | | | | | | 0.27 | 1.75 | 2.49 | 3.05 |
| | | 2550 | 29.55 | 35.03 | 41.20 | 47.34 | 53.64 | 59.81 | | | | | | | | | 0.28 | 1.79 | 2.54 | 3.11 |
| | 25 | 2600 | 29.97 | 35.50 | 41.71 | 47.86 | 54.13 | 60.18 | | | | | | | | | 0.28 | 1.82 | 2.59 | 3.18 |
| | | 2650 | 30.38 | 35.95 | 42.20 | 48.35 | 54.58 | 60.51 | | | | | | | | | 0.29 | 1.86 | 2.64 | 3.24 |
| | | 2700 | 30.77 | 36.40 | 42.67 | 48.83 | 55.00 | 60.80 | | | | | | | | | 0.29 | 1.89 | 2.69 | 3.30 |
| | | 2750 | 31.16 | 36.83 | 43.13 | 49.28 | 55.39 | 61.04 | | | | | | | | | 0.30 | 1.93 | 2.74 | 3.36 |
| | | 2800 | 31.55 | 37.25 | 43.57 | 49.70 | 55.74 | | | | | | | | | | 0.30 | 1.96 | 2.79 | 3.42 |
| | | 2850 | 31.92 | 37.66 | 43.99 | 50.10 | 56.06 | | | | | | | | | | 0.31 | 2.00 | 2.84 | 3.48 |
| | | 2900 | 32.28 | 38.05 | 44.40 | 50.48 | 56.35 | | | | | | | | | | 0.31 | 2.04 | 2.89 | 3.54 |
| | | 2950 | 32.63 | 38.43 | 44.79 | 50.83 | 56.60 | | | | | | | | | | 0.32 | 2.07 | 2.94 | 3.60 |
| | | 3000 | 32.97 | 38.80 | 45.15 | 51.15 | 56.81 | | | | | | | | | | 0.33 | 2.11 | 2.99 | 3.66 |
| | | 3050 | 33.31 | 39.16 | 45.50 | 51.45 | | | | | | | | | | | 0.33 | 2.14 | 3.04 | 3.72 |
| | 30 | 3100 | 33.63 | 39.50 | 45.83 | 51.73 | | | | | | | | | | | 0.34 | 2.18 | 3.09 | 3.79 |
| | | 3150 | 33.94 | 39.83 | 46.14 | 51.97 | | | | | | | | | | | 0.34 | 2.21 | 3.14 | 3.85 |
| | | 3200 | 34.24 | 40.14 | 46.43 | 52.19 | | | | | | | | | | | 0.35 | 2.25 | 3.19 | 3.91 |
| | | 3250 | 34.54 | 40.44 | 46.71 | 52.38 | | | | | | | | | | | 0.35 | 2.28 | 3.24 | 3.97 |
| | | 3300 | 34.82 | 40.72 | 46.96 | | | | | | | | | | | | 0.36 | 2.32 | 3.29 | 4.03 |
| | | 3350 | 35.09 | 40.99 | 47.19 | | | | | | | | | | | | 0.36 | 2.35 | 3.34 | 4.09 |
| | | 3400 | 35.35 | 41.25 | 47.40 | | | | | | | | | | | | 0.37 | 2.39 | 3.39 | 4.15 |
| | | 3450 | 35.59 | 41.49 | 47.58 | | | | | | | | | | | | 0.37 | 2.42 | 3.44 | 4.21 |
| | | 3500 | 35.83 | 41.71 | 47.75 | | | | | | | | | | | | 0.38 | 2.46 | 3.49 | 4.27 |
| | | | 35 | 40 | | | | | | | | | | | | | | | | |
| Dynamically balanced (for details see DIN 2211) | | | | | | | | | | | | | | | | | v (m/s) | | | |
| | | | | | | | | | | | | | | | | | Pulleys | | | |

Where v > 42 m/s, please consult our Applications Engineering Department

# Power Ratings

## optibelt SUPER TX M=S Section ZX/X10

## Nominal Power Rating $P_N$ (kW) for $\beta$ = 180° and $L_d$ = 822 mm

*Table 40*

| Pulleys | v (m/s) | $n_k$ (min$^{-1}$) | Datum diameter of small pulley $d_{dk}$ (mm) 40 | 45 | 50 | 56 | 63 | 71 | 80 | 90 | 100 | 112 | Additional power (kW) per belt for speed ratio i 1,01 to 1,05 | 1,06 to 1,26 | 1,27 to 1,57 | >1,57 |
|---|---|---|---|---|---|---|---|---|---|---|---|---|---|---|---|---|
| Statically balanced | | **700** | 0.22 | 0.27 | 0.32 | 0.37 | 0.44 | 0.51 | 0.59 | 0.67 | 0.76 | 0.85 | 0.00 | 0.02 | 0.03 | 0.04 |
| | | **950** | 0.27 | 0.34 | 0.40 | 0.47 | 0.55 | 0.64 | 0.74 | 0.85 | 0.96 | 1.09 | 0.01 | 0.02 | 0.04 | 0.05 |
| | | **1450** | 0.36 | 0.45 | 0.54 | 0.64 | 0.75 | 0.88 | 1.02 | 1.18 | 1.32 | 1.50 | 0.01 | 0.04 | 0.05 | 0.08 |
| | | **2850** | 0.54 | 0.69 | 0.84 | 1.01 | 1.20 | 1.41 | 1.64 | 1.88 | 2.12 | 2.39 | 0.02 | 0.07 | 0.11 | 0.16 |
| | | 100 | 0.05 | 0.06 | 0.07 | 0.08 | 0.09 | 0.10 | 0.12 | 0.14 | 0.15 | 0.17 | 0.00 | 0.00 | 0.00 | 0.01 |
| | | 200 | 0.09 | 0.10 | 0.12 | 0.14 | 0.16 | 0.19 | 0.21 | 0.24 | 0.27 | 0.31 | 0.00 | 0.01 | 0.01 | 0.01 |
| | | 300 | 0.12 | 0.14 | 0.16 | 0.19 | 0.22 | 0.26 | 0.30 | 0.34 | 0.38 | 0.43 | 0.00 | 0.01 | 0.01 | 0.02 |
| | | 400 | 0.15 | 0.18 | 0.21 | 0.24 | 0.28 | 0.33 | 0.38 | 0.43 | 0.48 | 0.54 | 0.00 | 0.01 | 0.01 | 0.02 |
| | | 500 | 0.17 | 0.21 | 0.25 | 0.29 | 0.34 | 0.39 | 0.45 | 0.51 | 0.58 | 0.65 | 0.00 | 0.01 | 0.02 | 0.03 |
| | | 600 | 0.20 | 0.24 | 0.28 | 0.33 | 0.39 | 0.45 | 0.52 | 0.60 | 0.67 | 0.76 | 0.00 | 0.02 | 0.02 | 0.03 |
| | | 700 | 0.22 | 0.27 | 0.32 | 0.37 | 0.44 | 0.51 | 0.59 | 0.67 | 0.76 | 0.85 | 0.00 | 0.02 | 0.03 | 0.04 |
| | 2 | 800 | 0.24 | 0.30 | 0.35 | 0.41 | 0.48 | 0.56 | 0.65 | 0.75 | 0.84 | 0.95 | 0.01 | 0.02 | 0.03 | 0.05 |
| | | 900 | 0.26 | 0.32 | 0.38 | 0.45 | 0.53 | 0.62 | 0.71 | 0.82 | 0.92 | 1.04 | 0.01 | 0.02 | 0.03 | 0.05 |
| | | 1000 | 0.28 | 0.35 | 0.41 | 0.49 | 0.57 | 0.67 | 0.77 | 0.89 | 1.00 | 1.13 | 0.01 | 0.03 | 0.04 | 0.06 |
| | | 1100 | 0.30 | 0.37 | 0.44 | 0.52 | 0.62 | 0.72 | 0.83 | 0.95 | 1.07 | 1.21 | 0.01 | 0.03 | 0.04 | 0.06 |
| | | 1200 | 0.32 | 0.40 | 0.47 | 0.56 | 0.66 | 0.77 | 0.89 | 1.02 | 1.15 | 1.30 | 0.01 | 0.03 | 0.04 | 0.07 |
| | | 1300 | 0.34 | 0.42 | 0.50 | 0.59 | 0.70 | 0.81 | 0.94 | 1.08 | 1.22 | 1.38 | 0.01 | 0.03 | 0.05 | 0.07 |
| | | 1400 | 0.36 | 0.44 | 0.52 | 0.62 | 0.74 | 0.86 | 1.00 | 1.14 | 1.29 | 1.46 | 0.01 | 0.04 | 0.05 | 0.08 |
| | | 1500 | 0.37 | 0.46 | 0.55 | 0.65 | 0.77 | 0.90 | 1.05 | 1.20 | 1.36 | 1.53 | 0.01 | 0.04 | 0.06 | 0.09 |
| | | 1600 | 0.39 | 0.48 | 0.58 | 0.69 | 0.81 | 0.95 | 1.10 | 1.26 | 1.42 | 1.61 | 0.01 | 0.04 | 0.06 | 0.09 |
| | | 1700 | 0.40 | 0.50 | 0.60 | 0.71 | 0.85 | 0.99 | 1.15 | 1.32 | 1.49 | 1.68 | 0.01 | 0.04 | 0.06 | 0.10 |
| | | 1800 | 0.42 | 0.52 | 0.62 | 0.74 | 0.88 | 1.03 | 1.20 | 1.38 | 1.55 | 1.75 | 0.01 | 0.05 | 0.07 | 0.10 |
| | | 1900 | 0.43 | 0.54 | 0.65 | 0.77 | 0.91 | 1.07 | 1.24 | 1.43 | 1.61 | 1.82 | 0.01 | 0.05 | 0.07 | 0.11 |
| | | 2000 | 0.44 | 0.56 | 0.67 | 0.80 | 0.95 | 1.11 | 1.29 | 1.48 | 1.67 | 1.89 | 0.01 | 0.05 | 0.07 | 0.11 |
| | | 2100 | 0.46 | 0.57 | 0.69 | 0.83 | 0.98 | 1.15 | 1.34 | 1.53 | 1.73 | 1.95 | 0.01 | 0.05 | 0.08 | 0.12 |
| | | 2200 | 0.47 | 0.59 | 0.71 | 0.85 | 1.01 | 1.19 | 1.38 | 1.59 | 1.78 | 2.01 | 0.01 | 0.06 | 0.08 | 0.13 |
| | 5 | 2300 | 0.48 | 0.61 | 0.73 | 0.88 | 1.04 | 1.22 | 1.42 | 1.63 | 1.84 | 2.08 | 0.02 | 0.06 | 0.08 | 0.13 |
| | | 2400 | 0.49 | 0.62 | 0.75 | 0.90 | 1.07 | 1.26 | 1.46 | 1.68 | 1.89 | 2.14 | 0.02 | 0.06 | 0.09 | 0.14 |
| | | 2500 | 0.50 | 0.64 | 0.77 | 0.93 | 1.10 | 1.29 | 1.50 | 1.73 | 1.95 | 2.19 | 0.02 | 0.06 | 0.09 | 0.14 |
| | | 2600 | 0.51 | 0.65 | 0.79 | 0.95 | 1.13 | 1.33 | 1.54 | 1.78 | 2.00 | 2.25 | 0.02 | 0.07 | 0.10 | 0.15 |
| | | 2700 | 0.52 | 0.67 | 0.81 | 0.97 | 1.16 | 1.36 | 1.58 | 1.82 | 2.05 | 2.31 | 0.02 | 0.07 | 0.10 | 0.15 |
| | | 2800 | 0.53 | 0.68 | 0.83 | 0.99 | 1.18 | 1.39 | 1.62 | 1.86 | 2.09 | 2.36 | 0.02 | 0.07 | 0.10 | 0.16 |
| | | 2900 | 0.54 | 0.70 | 0.84 | 1.02 | 1.21 | 1.43 | 1.66 | 1.91 | 2.14 | 2.41 | 0.02 | 0.07 | 0.11 | 0.17 |
| | | 3000 | 0.55 | 0.71 | 0.86 | 1.04 | 1.24 | 1.46 | 1.70 | 1.95 | 2.19 | 2.46 | 0.02 | 0.08 | 0.11 | 0.17 |
| | | 3100 | 0.56 | 0.72 | 0.88 | 1.06 | 1.26 | 1.49 | 1.73 | 1.99 | 2.23 | 2.51 | 0.02 | 0.08 | 0.11 | 0.18 |
| | | 3200 | 0.57 | 0.74 | 0.89 | 1.08 | 1.29 | 1.52 | 1.77 | 2.03 | 2.28 | 2.56 | 0.02 | 0.08 | 0.12 | 0.18 |
| | | 3300 | 0.58 | 0.75 | 0.91 | 1.10 | 1.31 | 1.55 | 1.80 | 2.07 | 2.32 | 2.60 | 0.02 | 0.08 | 0.12 | 0.19 |
| | | 3400 | 0.59 | 0.76 | 0.93 | 1.12 | 1.34 | 1.57 | 1.83 | 2.10 | 2.36 | 2.65 | 0.02 | 0.09 | 0.13 | 0.19 |
| | | 3500 | 0.60 | 0.77 | 0.94 | 1.14 | 1.36 | 1.60 | 1.86 | 2.14 | 2.40 | 2.69 | 0.02 | 0.09 | 0.13 | 0.20 |
| | | 3600 | 0.60 | 0.78 | 0.95 | 1.16 | 1.38 | 1.63 | 1.89 | 2.17 | 2.44 | 2.73 | 0.02 | 0.09 | 0.13 | 0.21 |
| | | 3700 | 0.61 | 0.79 | 0.97 | 1.17 | 1.40 | 1.66 | 1.93 | 2.21 | 2.47 | 2.77 | 0.03 | 0.09 | 0.14 | 0.21 |
| | | 3800 | 0.62 | 0.80 | 0.98 | 1.19 | 1.43 | 1.68 | 1.95 | 2.24 | 2.51 | 2.81 | 0.03 | 0.10 | 0.14 | 0.22 |
| | | 3900 | 0.62 | 0.81 | 1.00 | 1.21 | 1.45 | 1.71 | 1.98 | 2.27 | 2.54 | 2.84 | 0.03 | 0.10 | 0.14 | 0.22 |
| | | 4000 | 0.63 | 0.82 | 1.01 | 1.23 | 1.47 | 1.73 | 2.01 | 2.30 | 2.58 | 2.88 | 0.03 | 0.10 | 0.15 | 0.23 |
| | | 4100 | 0.64 | 0.83 | 1.02 | 1.24 | 1.49 | 1.75 | 2.04 | 2.33 | 2.61 | 2.91 | 0.03 | 0.10 | 0.15 | 0.23 |
| | | 4200 | 0.64 | 0.84 | 1.03 | 1.26 | 1.51 | 1.78 | 2.07 | 2.36 | 2.64 | 2.94 | 0.03 | 0.11 | 0.15 | 0.24 |
| | | 4300 | 0.65 | 0.85 | 1.05 | 1.27 | 1.53 | 1.80 | 2.09 | 2.39 | 2.67 | 2.97 | 0.03 | 0.11 | 0.16 | 0.25 |
| | | 4400 | 0.65 | 0.86 | 1.06 | 1.29 | 1.54 | 1.82 | 2.12 | 2.42 | 2.70 | 3.00 | 0.03 | 0.11 | 0.16 | 0.25 |
| | | 4500 | 0.66 | 0.87 | 1.07 | 1.30 | 1.56 | 1.84 | 2.14 | 2.44 | 2.72 | 3.02 | 0.03 | 0.12 | 0.17 | 0.26 |
| | | 4600 | 0.66 | 0.87 | 1.08 | 1.32 | 1.58 | 1.86 | 2.16 | 2.47 | 2.75 | 3.05 | 0.03 | 0.12 | 0.17 | 0.26 |
| | 10 | 4700 | 0.67 | 0.88 | 1.09 | 1.33 | 1.60 | 1.88 | 2.18 | 2.49 | 2.77 | 3.07 | 0.03 | 0.12 | 0.17 | 0.27 |
| | | 4800 | 0.67 | 0.89 | 1.10 | 1.34 | 1.61 | 1.90 | 2.21 | 2.52 | 2.80 | 3.09 | 0.03 | 0.12 | 0.18 | 0.27 |
| | | 4900 | 0.68 | 0.90 | 1.11 | 1.36 | 1.63 | 1.92 | 2.23 | 2.54 | 2.82 | 3.11 | 0.03 | 0.13 | 0.18 | 0.28 |
| | | 5000 | 0.68 | 0.90 | 1.12 | 1.37 | 1.64 | 1.94 | 2.25 | 2.56 | 2.84 | 3.13 | 0.03 | 0.13 | 0.18 | 0.29 |
| | | 5100 | 0.68 | 0.91 | 1.13 | 1.38 | 1.66 | 1.96 | 2.27 | 2.58 | 2.86 | 3.14 | 0.03 | 0.13 | 0.19 | 0.29 |
| | | 5200 | 0.69 | 0.92 | 1.14 | 1.39 | 1.67 | 1.97 | 2.28 | 2.60 | 2.87 | 3.16 | 0.04 | 0.13 | 0.19 | 0.30 |
| | | 5300 | 0.69 | 0.92 | 1.15 | 1.40 | 1.69 | 1.99 | 2.30 | 2.61 | 2.89 | 3.17 | 0.04 | 0.14 | 0.20 | 0.30 |
| | | 5400 | 0.69 | 0.93 | 1.15 | 1.41 | 1.70 | 2.00 | 2.32 | 2.63 | 2.91 | 3.18 | 0.04 | 0.14 | 0.20 | 0.31 |
| | | 5500 | 0.69 | 0.93 | 1.16 | 1.42 | 1.71 | 2.02 | 2.33 | 2.65 | 2.92 | 3.19 | 0.04 | 0.14 | 0.20 | 0.31 |
| | | 5600 | 0.70 | 0.94 | 1.17 | 1.43 | 1.72 | 2.03 | 2.35 | 2.66 | 2.93 | 3.20 | 0.04 | 0.14 | 0.21 | 0.32 |
| | | 5800 | 0.70 | 0.95 | 1.18 | 1.45 | 1.75 | 2.06 | 2.38 | 2.69 | 2.95 | 3.21 | 0.04 | 0.15 | 0.21 | 0.33 |
| | | 6000 | 0.70 | 0.96 | 1.20 | 1.47 | 1.77 | 2.08 | 2.40 | 2.71 | 2.97 | 3.21 | 0.04 | 0.15 | 0.22 | 0.34 |
| | | 6200 | 0.71 | 0.96 | 1.21 | 1.49 | 1.79 | 2.10 | 2.42 | 2.72 | 2.97 | 3.20 | 0.04 | 0.16 | 0.23 | 0.35 |
| | | 6400 | 0.71 | 0.97 | 1.22 | 1.50 | 1.81 | 2.12 | 2.44 | 2.74 | 2.98 | 3.18 | 0.04 | 0.16 | 0.24 | 0.37 |
| | | 6600 | 0.71 | 0.98 | 1.23 | 1.51 | 1.82 | 2.14 | 2.45 | 2.74 | 2.97 | 3.16 | 0.04 | 0.17 | 0.24 | 0.38 |
| | | 6800 | 0.71 | 0.98 | 1.24 | 1.52 | 1.83 | 2.15 | 2.46 | 2.75 | 2.96 | 3.13 | 0.05 | 0.17 | 0.25 | 0.39 |
| | 15 | 7000 | 0.71 | 0.98 | 1.24 | 1.53 | 1.84 | 2.16 | 2.47 | 2.74 | 2.95 | 3.09 | 0.05 | 0.18 | 0.26 | 0.40 |
| | | 7200 | 0.71 | 0.98 | 1.25 | 1.54 | 1.85 | 2.17 | 2.47 | 2.74 | 2.93 | 3.04 | 0.05 | 0.18 | 0.27 | 0.41 |
| | | 7400 | 0.70 | 0.99 | 1.25 | 1.55 | 1.86 | 2.17 | 2.47 | 2.73 | 2.90 | 2.99 | 0.05 | 0.19 | 0.27 | 0.42 |
| | | 7600 | 0.70 | 0.99 | 1.25 | 1.55 | 1.86 | 2.18 | 2.47 | 2.71 | | | 0.05 | 0.19 | 0.28 | 0.43 |
| | | 7800 | 0.70 | 0.99 | 1.26 | 1.55 | 1.87 | 2.18 | 2.46 | 2.69 | | | 0.05 | 0.20 | 0.29 | 0.45 |
| | | 8000 | 0.69 | 0.98 | 1.26 | 1.56 | 1.87 | 2.17 | 2.45 | 2.66 | | | 0.05 | 0.20 | 0.30 | 0.46 |
| | | 8200 | 0.68 | 0.98 | 1.25 | 1.56 | 1.87 | 2.17 | 2.43 | | | | 0.06 | 0.21 | 0.30 | 0.47 |
| | | 8400 | 0.68 | 0.98 | 1.25 | 1.55 | 1.86 | 2.16 | 2.41 | | | | 0.06 | 0.21 | 0.31 | 0.48 |
| | | | | | 20 | | 25 | 30 | | | | | | | v (m/s) | |
| | | | | | | | | Dynamically balanced (for details see DIN 2211) | | | | | | | Pulleys | |

Where v > 30 m/s, please consult our Applications Engineering Department

SUPER TX M=S

# Power Ratings

## optibelt SUPER TX M=S Section AX/X13

## Nominal Power Rating $P_N$ (kW) for $\beta$ = 180° and $L_d$ = 1730 mm

*Table 41*

| Pulleys | v (m/s) | $n_k$ (min$^{-1}$) | Datum diameter of small pulley $d_{dk}$ (mm) 63 | 71 | 80 | 90 | 95 | 100 | 106 | 112 | 118 | 125 | 132 | 140 | 150 | 160 | 180 | Additional power (kW) per belt for speed ratio i 1,01 to 1,05 | 1,06 to 1,26 | 1,27 to 1,57 | >1,57 |
|---|---|---|---|---|---|---|---|---|---|---|---|---|---|---|---|---|---|---|---|---|---|
| Statically balanced | | **700** | 0.67 | 0.86 | 1.07 | 1.29 | 1.40 | 1.51 | 1.64 | 1.77 | 1.90 | 2.04 | 2.19 | 2.35 | 2.56 | 2.76 | 3.15 | 0.02 | 0.08 | 0.12 | 0.18 |
| | | **950** | 0.82 | 1.06 | 1.33 | 1.61 | 1.76 | 1.90 | 2.06 | 2.23 | 2.39 | 2.58 | 2.76 | 2.97 | 3.23 | 3.49 | 3.98 | 0.03 | 0.11 | 0.16 | 0.24 |
| | | **1450** | 1.05 | 1.39 | 1.76 | 2.16 | 2.36 | 2.56 | 2.79 | 3.02 | 3.25 | 3.51 | 3.76 | 4.05 | 4.40 | 4.74 | 5.41 | 0.04 | 0.17 | 0.24 | 0.37 |
| | | **2850** | 1.39 | 1.96 | 2.58 | 3.23 | 3.55 | 3.86 | 4.23 | 4.58 | 4.92 | 5.31 | 5.68 | 6.09 | 6.57 | 7.03 | 7.84 | 0.09 | 0.33 | 0.47 | 0.73 |
| | | 100 | 0.16 | 0.19 | 0.23 | 0.28 | 0.30 | 0.32 | 0.34 | 0.37 | 0.39 | 0.42 | 0.45 | 0.48 | 0.52 | 0.56 | 0.63 | 0.00 | 0.01 | 0.02 | 0.03 |
| | | 200 | 0.27 | 0.34 | 0.41 | 0.49 | 0.52 | 0.56 | 0.61 | 0.65 | 0.70 | 0.75 | 0.80 | 0.86 | 0.93 | 1.00 | 1.14 | 0.01 | 0.02 | 0.03 | 0.05 |
| | | 300 | 0.37 | 0.46 | 0.56 | 0.67 | 0.73 | 0.78 | 0.84 | 0.91 | 0.97 | 1.04 | 1.11 | 1.20 | 1.30 | 1.40 | 1.59 | 0.01 | 0.03 | 0.05 | 0.08 |
| | | 400 | 0.46 | 0.57 | 0.70 | 0.84 | 0.91 | 0.98 | 1.06 | 1.14 | 1.22 | 1.32 | 1.41 | 1.51 | 1.64 | 1.77 | 2.02 | 0.01 | 0.05 | 0.07 | 0.10 |
| | | 500 | 0.54 | 0.68 | 0.83 | 1.00 | 1.08 | 1.17 | 1.27 | 1.36 | 1.46 | 1.57 | 1.68 | 1.81 | 1.96 | 2.11 | 2.41 | 0.02 | 0.06 | 0.08 | 0.13 |
| | 2 | 600 | 0.61 | 0.77 | 0.95 | 1.15 | 1.25 | 1.34 | 1.46 | 1.57 | 1.68 | 1.81 | 1.94 | 2.09 | 2.27 | 2.44 | 2.79 | 0.02 | 0.07 | 0.10 | 0.15 |
| | | 700 | 0.67 | 0.86 | 1.07 | 1.29 | 1.40 | 1.51 | 1.64 | 1.77 | 1.90 | 2.04 | 2.19 | 2.35 | 2.56 | 2.76 | 3.15 | 0.02 | 0.08 | 0.12 | 0.18 |
| | | 800 | 0.74 | 0.94 | 1.17 | 1.42 | 1.55 | 1.67 | 1.81 | 1.96 | 2.10 | 2.26 | 2.43 | 2.61 | 2.84 | 3.06 | 3.50 | 0.02 | 0.09 | 0.13 | 0.21 |
| | | 900 | 0.79 | 1.02 | 1.28 | 1.55 | 1.69 | 1.82 | 1.98 | 2.14 | 2.30 | 2.48 | 2.65 | 2.86 | 3.10 | 3.35 | 3.82 | 0.03 | 0.10 | 0.15 | 0.23 |
| | | 1000 | 0.85 | 1.10 | 1.37 | 1.67 | 1.82 | 1.97 | 2.14 | 2.31 | 2.48 | 2.68 | 2.87 | 3.09 | 3.36 | 3.62 | 4.14 | 0.03 | 0.11 | 0.17 | 0.26 |
| | | 1100 | 0.90 | 1.17 | 1.47 | 1.79 | 1.95 | 2.11 | 2.30 | 2.48 | 2.66 | 2.88 | 3.08 | 3.32 | 3.61 | 3.89 | 4.44 | 0.03 | 0.13 | 0.18 | 0.28 |
| | | 1200 | 0.94 | 1.23 | 1.56 | 1.90 | 2.07 | 2.24 | 2.44 | 2.64 | 2.84 | 3.06 | 3.29 | 3.54 | 3.84 | 4.15 | 4.73 | 0.04 | 0.14 | 0.20 | 0.31 |
| | | 1300 | 0.99 | 1.30 | 1.64 | 2.01 | 2.19 | 2.37 | 2.59 | 2.80 | 3.01 | 3.25 | 3.48 | 3.75 | 4.07 | 4.39 | 5.01 | 0.04 | 0.15 | 0.22 | 0.33 |
| | | 1400 | 1.03 | 1.36 | 1.72 | 2.11 | 2.31 | 2.50 | 2.72 | 2.95 | 3.17 | 3.42 | 3.67 | 3.95 | 4.29 | 4.63 | 5.28 | 0.04 | 0.16 | 0.23 | 0.36 |
| | 5 | 1500 | 1.07 | 1.42 | 1.80 | 2.21 | 2.42 | 2.62 | 2.86 | 3.09 | 3.32 | 3.59 | 3.85 | 4.14 | 4.50 | 4.86 | 5.53 | 0.05 | 0.17 | 0.25 | 0.38 |
| | | 1600 | 1.10 | 1.47 | 1.87 | 2.31 | 2.52 | 2.74 | 2.99 | 3.23 | 3.47 | 3.75 | 4.03 | 4.33 | 4.71 | 5.07 | 5.78 | 0.05 | 0.18 | 0.26 | 0.41 |
| | | 1700 | 1.14 | 1.52 | 1.95 | 2.40 | 2.63 | 2.85 | 3.11 | 3.37 | 3.62 | 3.91 | 4.19 | 4.51 | 4.90 | 5.28 | 6.01 | 0.05 | 0.20 | 0.28 | 0.44 |
| | | 1800 | 1.17 | 1.57 | 2.01 | 2.49 | 2.73 | 2.96 | 3.23 | 3.50 | 3.76 | 4.06 | 4.36 | 4.69 | 5.09 | 5.48 | 6.23 | 0.05 | 0.21 | 0.30 | 0.46 |
| | | 1900 | 1.20 | 1.62 | 2.08 | 2.58 | 2.82 | 3.06 | 3.34 | 3.62 | 3.89 | 4.21 | 4.51 | 4.85 | 5.27 | 5.67 | 6.44 | 0.06 | 0.22 | 0.31 | 0.49 |
| | | 2000 | 1.23 | 1.66 | 2.14 | 2.66 | 2.91 | 3.16 | 3.45 | 3.74 | 4.02 | 4.35 | 4.66 | 5.01 | 5.44 | 5.86 | 6.64 | 0.06 | 0.23 | 0.33 | 0.51 |
| | | 2100 | 1.25 | 1.71 | 2.20 | 2.74 | 3.00 | 3.26 | 3.56 | 3.86 | 4.15 | 4.48 | 4.80 | 5.17 | 5.60 | 6.03 | 6.83 | 0.06 | 0.24 | 0.35 | 0.54 |
| | | 2200 | 1.28 | 1.75 | 2.26 | 2.81 | 3.08 | 3.35 | 3.66 | 3.97 | 4.27 | 4.61 | 4.94 | 5.31 | 5.76 | 6.19 | 7.00 | 0.07 | 0.25 | 0.36 | 0.56 |
| | | 2300 | 1.30 | 1.78 | 2.32 | 2.89 | 3.16 | 3.44 | 3.76 | 4.07 | 4.38 | 4.73 | 5.07 | 5.45 | 5.91 | 6.35 | 7.16 | 0.07 | 0.26 | 0.38 | 0.59 |
| | | 2400 | 1.32 | 1.82 | 2.37 | 2.96 | 3.24 | 3.52 | 3.85 | 4.18 | 4.49 | 4.85 | 5.20 | 5.58 | 6.05 | 6.49 | 7.31 | 0.07 | 0.28 | 0.40 | 0.62 |
| | | 2500 | 1.34 | 1.85 | 2.42 | 3.02 | 3.32 | 3.60 | 3.94 | 4.27 | 4.59 | 4.96 | 5.32 | 5.71 | 6.18 | 6.63 | 7.45 | 0.08 | 0.29 | 0.41 | 0.64 |
| | | 2600 | 1.35 | 1.89 | 2.47 | 3.09 | 3.39 | 3.68 | 4.03 | 4.37 | 4.69 | 5.07 | 5.43 | 5.83 | 6.30 | 6.75 | 7.58 | 0.08 | 0.30 | 0.43 | 0.67 |
| | | 2700 | 1.37 | 1.92 | 2.51 | 3.15 | 3.46 | 3.76 | 4.11 | 4.45 | 4.79 | 5.17 | 5.53 | 5.94 | 6.42 | 6.87 | 7.69 | 0.08 | 0.31 | 0.45 | 0.69 |
| | | 2800 | 1.38 | 1.94 | 2.55 | 3.21 | 3.52 | 3.83 | 4.19 | 4.54 | 4.88 | 5.26 | 5.63 | 6.04 | 6.52 | 6.98 | 7.79 | 0.09 | 0.32 | 0.46 | 0.72 |
| | | 2900 | 1.39 | 1.97 | 2.60 | 3.26 | 3.58 | 3.90 | 4.26 | 4.62 | 4.96 | 5.35 | 5.73 | 6.14 | 6.62 | 7.07 | 7.88 | 0.09 | 0.33 | 0.48 | 0.74 |
| | 10 | 3000 | 1.40 | 2.00 | 2.63 | 3.31 | 3.64 | 3.96 | 4.33 | 4.69 | 5.04 | 5.44 | 5.82 | 6.23 | 6.71 | 7.16 | 7.95 | 0.09 | 0.34 | 0.50 | 0.77 |
| | | 3100 | 1.41 | 2.02 | 2.67 | 3.36 | 3.70 | 4.02 | 4.40 | 4.77 | 5.12 | 5.52 | 5.90 | 6.31 | 6.79 | 7.24 | 8.01 | 0.09 | 0.36 | 0.51 | 0.80 |
| | | 3200 | 1.42 | 2.04 | 2.70 | 3.41 | 3.75 | 4.08 | 4.46 | 4.83 | 5.19 | 5.59 | 5.97 | 6.38 | 6.86 | 7.30 | 8.06 | 0.10 | 0.37 | 0.53 | 0.82 |
| | | 3300 | 1.43 | 2.06 | 2.74 | 3.45 | 3.80 | 4.13 | 4.52 | 4.89 | 5.25 | 5.66 | 6.04 | 6.45 | 6.93 | 7.36 | 8.09 | 0.10 | 0.38 | 0.55 | 0.85 |
| | | 3400 | 1.43 | 2.07 | 2.76 | 3.49 | 3.84 | 4.18 | 4.57 | 4.95 | 5.31 | 5.72 | 6.10 | 6.51 | 6.98 | 7.41 | 8.11 | 0.10 | 0.39 | 0.56 | 0.87 |
| | | 3500 | 1.43 | 2.09 | 2.79 | 3.53 | 3.88 | 4.23 | 4.62 | 5.00 | 5.37 | 5.77 | 6.15 | 6.56 | 7.03 | 7.44 | 8.11 | 0.11 | 0.40 | 0.58 | 0.90 |
| | | 3600 | 1.44 | 2.10 | 2.82 | 3.57 | 3.92 | 4.27 | 4.67 | 5.05 | 5.42 | 5.82 | 6.20 | 6.61 | 7.06 | 7.47 | | 0.11 | 0.41 | 0.60 | 0.92 |
| | | 3700 | 1.44 | 2.11 | 2.84 | 3.60 | 3.96 | 4.31 | 4.71 | 5.10 | 5.46 | 5.87 | 6.24 | 6.64 | 7.09 | 7.48 | | 0.11 | 0.42 | 0.61 | 0.95 |
| | | 3800 | 1.43 | 2.12 | 2.86 | 3.63 | 3.99 | 4.34 | 4.75 | 5.14 | 5.50 | 5.90 | 6.28 | 6.67 | 7.11 | 7.48 | | 0.12 | 0.44 | 0.63 | 0.98 |
| | | 3900 | 1.43 | 2.13 | 2.88 | 3.65 | 4.02 | 4.38 | 4.78 | 5.17 | 5.53 | 5.93 | 6.30 | 6.69 | 7.11 | 7.47 | | 0.12 | 0.45 | 0.65 | 1.00 |
| | | 4000 | 1.43 | 2.14 | 2.89 | 3.68 | 4.05 | 4.40 | 4.81 | 5.20 | 5.56 | 5.96 | 6.32 | 6.70 | 7.11 | 7.45 | | 0.12 | 0.46 | 0.66 | 1.03 |
| | | 4100 | 1.42 | 2.14 | 2.91 | 3.70 | 4.07 | 4.43 | 4.84 | 5.22 | 5.59 | 5.98 | 6.34 | 6.70 | 7.10 | | | 0.12 | 0.47 | 0.68 | 1.05 |
| | | 4200 | 1.42 | 2.14 | 2.92 | 3.72 | 4.09 | 4.45 | 4.86 | 5.24 | 5.60 | 5.99 | 6.34 | 6.70 | 7.07 | | | 0.13 | 0.48 | 0.70 | 1.08 |
| | | 4300 | 1.41 | 2.15 | 2.93 | 3.73 | 4.11 | 4.47 | 4.88 | 5.26 | 5.61 | 6.00 | 6.34 | 6.68 | 7.04 | | | 0.13 | 0.49 | 0.71 | 1.10 |
| | | 4400 | 1.40 | 2.14 | 2.93 | 3.74 | 4.12 | 4.48 | 4.89 | 5.27 | 5.62 | 6.00 | 6.33 | 6.66 | 7.00 | | | 0.13 | 0.51 | 0.73 | 1.13 |
| | | 4500 | 1.39 | 2.14 | 2.94 | 3.75 | 4.13 | 4.49 | 4.90 | 5.27 | 5.62 | 5.99 | 6.31 | 6.63 | 6.94 | | | 0.14 | 0.52 | 0.74 | 1.15 |
| | 15 | 4600 | 1.37 | 2.14 | 2.94 | 3.76 | 4.14 | 4.49 | 4.90 | 5.27 | 5.61 | 5.97 | 6.29 | | | | | 0.14 | 0.53 | 0.76 | 1.18 |
| | | 4700 | 1.36 | 2.13 | 2.94 | 3.76 | 4.14 | 4.50 | 4.90 | 5.27 | 5.60 | 5.95 | 6.25 | | | | | 0.14 | 0.54 | 0.78 | 1.21 |
| | | 4800 | 1.34 | 2.12 | 2.94 | 3.76 | 4.14 | 4.49 | 4.89 | 5.26 | 5.59 | 5.92 | 6.21 | | | | | 0.15 | 0.55 | 0.79 | 1.23 |
| | | 4900 | 1.33 | 2.11 | 2.93 | 3.76 | 4.13 | 4.49 | 4.88 | 5.24 | 5.56 | 5.89 | 6.16 | | | | | 0.15 | 0.56 | 0.81 | 1.26 |
| | | 5000 | 1.31 | 2.10 | 2.92 | 3.75 | 4.13 | 4.48 | 4.87 | 5.22 | 5.53 | 5.85 | 6.11 | | | | | 0.15 | 0.57 | 0.83 | 1.28 |
| | | 5100 | 1.29 | 2.09 | 2.91 | 3.74 | 4.11 | 4.46 | 4.85 | 5.19 | 5.50 | | | | | | | 0.16 | 0.59 | 0.84 | 1.31 |
| | | 5200 | 1.27 | 2.07 | 2.90 | 3.73 | 4.10 | 4.45 | 4.82 | 5.16 | 5.46 | | | | | | | 0.16 | 0.60 | 0.86 | 1.33 |
| | | 5300 | 1.25 | 2.05 | 2.89 | 3.71 | 4.08 | 4.42 | 4.79 | 5.12 | 5.41 | | | | | | | 0.16 | 0.61 | 0.88 | 1.36 |
| | | 5400 | 1.22 | 2.04 | 2.87 | 3.69 | 4.06 | 4.40 | 4.76 | 5.08 | 5.35 | | | | | | | 0.16 | 0.62 | 0.89 | 1.39 |
| | | 5500 | 1.20 | 2.01 | 2.85 | 3.67 | 4.03 | 4.37 | 4.72 | 5.03 | 5.29 | | | | | | | 0.17 | 0.63 | 0.91 | 1.41 |
| | | 5600 | 1.17 | 1.99 | 2.83 | 3.64 | 4.00 | 4.33 | 4.68 | | | | | | | | | 0.17 | 0.64 | 0.93 | 1.44 |
| | | 5700 | 1.14 | 1.97 | 2.80 | 3.61 | 3.97 | 4.29 | 4.63 | | | | | | | | | 0.17 | 0.65 | 0.94 | 1.46 |
| | | 5800 | 1.11 | 1.94 | 2.78 | 3.58 | 3.93 | 4.25 | 4.58 | | | | | | | | | 0.18 | 0.67 | 0.96 | 1.49 |
| | | 5900 | 1.08 | 1.91 | 2.75 | 3.55 | 3.89 | 4.20 | 4.52 | | | | | | | | | 0.18 | 0.68 | 0.98 | 1.51 |
| | | 6000 | 1.05 | 1.88 | 2.72 | 3.51 | 3.85 | 4.15 | 4.45 | | | | | | | | | 0.18 | 0.69 | 0.99 | 1.54 |
| | | | | | | | | | | | | | | Where v > 30 m/s, please consult our Applications Engineering Department | | | | | | | |
| | | | 20 | | 25 | | | 30 | | | | | | | | | | | | v (m/s) | |
| | | | | | | | | Dynamically balanced (for details see DIN 2211) | | | | | | | | | | | | Pulleys | |

# Power Ratings

## optibelt SUPER TX M=S Section BX/X17

## Nominal Power Rating $P_N$ (kW) for $\beta$ = 180° and $L_d$ = 2280 mm

*Table 42*

| Pulleys | v (m/s) | $n_k$ (min$^{-1}$) | Datum diameter of small pulley $d_{dk}$ (mm) 90 | 100 | 106 | 112 | 118 | 125 | 132 | 140 | 160 | 180 | 190 | 200 | 212 | 224 | 250 | 280 | Additional power (kW) per belt for speed ratio i 1,01 to 1,05 | 1,06 to 1,26 | 1,27 to 1,57 | >1,57 |
|---|---|---|---|---|---|---|---|---|---|---|---|---|---|---|---|---|---|---|---|---|---|---|
| Statically balanced | | **700** | 1.70 | 2.01 | 2.20 | 2.38 | 2.56 | 2.77 | 2.98 | 3.21 | 3.79 | 4.35 | 4.63 | 4.90 | 5.23 | 5.55 | 6.22 | 6.98 | 0.03 | 0.12 | 0.18 | 0.28 |
| | | **950** | 2.12 | 2.52 | 2.76 | 2.99 | 3.23 | 3.49 | 3.76 | 4.06 | 4.79 | 5.51 | 5.86 | 6.20 | 6.61 | 7.01 | 7.85 | 8.78 | 0.04 | 0.17 | 0.24 | 0.37 |
| | | **1450** | 2.82 | 3.39 | 3.72 | 4.05 | 4.37 | 4.75 | 5.11 | 5.53 | 6.53 | 7.49 | 7.95 | 8.40 | 8.94 | 9.45 | 10.52 | 11.66 | 0.07 | 0.26 | 0.37 | 0.57 |
| | | **2850** | 4.16 | 5.06 | 5.59 | 6.10 | 6.60 | 7.16 | 7.70 | 8.30 | 9.67 | 10.86 | 11.39 | 11.87 | 12.39 | 12.82 | 13.51 | 13.82 | 0.13 | 0.50 | 0.72 | 1.12 |
| | | 100 | 0.37 | 0.42 | 0.46 | 0.49 | 0.53 | 0.57 | 0.61 | 0.65 | 0.76 | 0.87 | 0.93 | 0.98 | 1.04 | 1.11 | 1.24 | 1.40 | 0.00 | 0.02 | 0.03 | 0.04 |
| | | 200 | 0.64 | 0.75 | 0.82 | 0.88 | 0.94 | 1.01 | 1.09 | 1.17 | 1.37 | 1.57 | 1.67 | 1.76 | 1.88 | 1.99 | 2.24 | 2.52 | 0.01 | 0.04 | 0.05 | 0.08 |
| | | 300 | 0.89 | 1.04 | 1.13 | 1.22 | 1.31 | 1.41 | 1.52 | 1.63 | 1.92 | 2.20 | 2.34 | 2.47 | 2.63 | 2.80 | 3.14 | 3.53 | 0.01 | 0.05 | 0.08 | 0.12 |
| | | 400 | 1.11 | 1.31 | 1.42 | 1.54 | 1.65 | 1.78 | 1.91 | 2.06 | 2.43 | 2.78 | 2.96 | 3.13 | 3.34 | 3.54 | 3.98 | 4.47 | 0.02 | 0.07 | 0.10 | 0.16 |
| | | 500 | 1.32 | 1.56 | 1.70 | 1.83 | 1.97 | 2.13 | 2.29 | 2.47 | 2.90 | 3.33 | 3.54 | 3.75 | 4.00 | 4.24 | 4.77 | 5.36 | 0.02 | 0.09 | 0.13 | 0.20 |
| | | 600 | 1.51 | 1.79 | 1.95 | 2.11 | 2.27 | 2.46 | 2.64 | 2.85 | 3.36 | 3.85 | 4.10 | 4.34 | 4.63 | 4.91 | 5.51 | 6.19 | 0.03 | 0.11 | 0.15 | 0.24 |
| | | 700 | 1.70 | 2.01 | 2.20 | 2.38 | 2.56 | 2.77 | 2.98 | 3.21 | 3.79 | 4.35 | 4.63 | 4.90 | 5.23 | 5.55 | 6.22 | 6.98 | 0.03 | 0.12 | 0.18 | 0.28 |
| | | 800 | 1.87 | 2.22 | 2.43 | 2.63 | 2.84 | 3.07 | 3.30 | 3.56 | 4.20 | 4.83 | 5.14 | 5.44 | 5.80 | 6.15 | 6.90 | 7.73 | 0.04 | 0.14 | 0.20 | 0.32 |
| | | 900 | 2.04 | 2.42 | 2.65 | 2.87 | 3.10 | 3.36 | 3.61 | 3.90 | 4.60 | 5.29 | 5.62 | 5.95 | 6.34 | 6.73 | 7.54 | 8.44 | 0.04 | 0.16 | 0.23 | 0.35 |
| | 5 | 1000 | 2.19 | 2.61 | 2.86 | 3.11 | 3.35 | 3.63 | 3.91 | 4.22 | 4.98 | 5.72 | 6.09 | 6.44 | 6.86 | 7.28 | 8.15 | 9.12 | 0.05 | 0.18 | 0.25 | 0.39 |
| | | 1100 | 2.35 | 2.80 | 3.07 | 3.33 | 3.59 | 3.89 | 4.19 | 4.53 | 5.35 | 6.14 | 6.53 | 6.91 | 7.36 | 7.80 | 8.73 | 9.75 | 0.05 | 0.19 | 0.28 | 0.43 |
| | | 1200 | 2.49 | 2.98 | 3.26 | 3.55 | 3.83 | 4.15 | 4.47 | 4.83 | 5.70 | 6.55 | 6.96 | 7.36 | 7.84 | 8.31 | 9.28 | 10.34 | 0.06 | 0.21 | 0.31 | 0.47 |
| | | 1300 | 2.63 | 3.15 | 3.45 | 3.75 | 4.05 | 4.39 | 4.73 | 5.11 | 6.04 | 6.94 | 7.37 | 7.80 | 8.29 | 8.78 | 9.80 | 10.90 | 0.06 | 0.23 | 0.33 | 0.51 |
| | | 1400 | 2.76 | 3.31 | 3.63 | 3.95 | 4.27 | 4.63 | 4.99 | 5.39 | 6.37 | 7.31 | 7.76 | 8.21 | 8.73 | 9.23 | 10.29 | 11.42 | 0.07 | 0.25 | 0.36 | 0.55 |
| | | 1500 | 2.89 | 3.47 | 3.81 | 4.14 | 4.48 | 4.86 | 5.23 | 5.66 | 6.68 | 7.66 | 8.14 | 8.60 | 9.14 | 9.66 | 10.74 | 11.90 | 0.07 | 0.26 | 0.38 | 0.59 |
| | | 1600 | 3.01 | 3.62 | 3.98 | 4.33 | 4.68 | 5.08 | 5.47 | 5.91 | 6.98 | 8.00 | 8.49 | 8.97 | 9.53 | 10.07 | 11.17 | 12.33 | 0.07 | 0.28 | 0.41 | 0.63 |
| | | 1700 | 3.13 | 3.76 | 4.14 | 4.51 | 4.87 | 5.29 | 5.70 | 6.16 | 7.27 | 8.32 | 8.83 | 9.32 | 9.89 | 10.44 | 11.56 | 12.73 | 0.08 | 0.30 | 0.43 | 0.67 |
| | | 1800 | 3.24 | 3.90 | 4.30 | 4.68 | 5.06 | 5.49 | 5.92 | 6.40 | 7.55 | 8.63 | 9.15 | 9.65 | 10.24 | 10.80 | 11.92 | 13.08 | 0.08 | 0.32 | 0.46 | 0.71 |
| | | 1900 | 3.35 | 4.04 | 4.45 | 4.85 | 5.24 | 5.69 | 6.13 | 6.62 | 7.81 | 8.92 | 9.45 | 9.97 | 10.56 | 11.12 | 12.25 | 13.38 | 0.09 | 0.33 | 0.48 | 0.75 |
| | | 2000 | 3.45 | 4.17 | 4.59 | 5.00 | 5.41 | 5.88 | 6.33 | 6.84 | 8.06 | 9.20 | 9.74 | 10.26 | 10.86 | 11.42 | 12.54 | 13.64 | 0.09 | 0.35 | 0.51 | 0.79 |
| | | 2100 | 3.55 | 4.29 | 4.73 | 5.16 | 5.58 | 6.06 | 6.53 | 7.05 | 8.30 | 9.46 | 10.01 | 10.53 | 11.13 | 11.69 | 12.80 | 13.86 | 0.10 | 0.37 | 0.53 | 0.83 |
| | | 2200 | 3.64 | 4.41 | 4.86 | 5.30 | 5.73 | 6.23 | 6.71 | 7.25 | 8.52 | 9.70 | 10.25 | 10.78 | 11.38 | 11.94 | 13.02 | 14.02 | 0.10 | 0.39 | 0.56 | 0.87 |
| | | 2300 | 3.73 | 4.53 | 4.99 | 5.44 | 5.89 | 6.39 | 6.89 | 7.44 | 8.74 | 9.93 | 10.48 | 11.01 | 11.61 | 12.16 | 13.20 | 14.14 | 0.11 | 0.41 | 0.58 | 0.91 |
| | | 2400 | 3.82 | 4.63 | 5.11 | 5.58 | 6.03 | 6.55 | 7.06 | 7.62 | 8.94 | 10.14 | 10.69 | 11.22 | 11.81 | 12.35 | 13.35 | 14.20 | 0.11 | 0.42 | 0.61 | 0.95 |
| | 10 | 2500 | 3.90 | 4.74 | 5.23 | 5.70 | 6.17 | 6.70 | 7.21 | 7.78 | 9.12 | 10.33 | 10.88 | 11.40 | 11.98 | 12.51 | 13.46 | 14.21 | 0.12 | 0.44 | 0.64 | 0.99 |
| | | 2600 | 3.98 | 4.84 | 5.34 | 5.83 | 6.30 | 6.84 | 7.37 | 7.94 | 9.30 | 10.51 | 11.06 | 11.57 | 12.13 | 12.64 | 13.52 | | 0.12 | 0.46 | 0.66 | 1.02 |
| | | 2700 | 4.05 | 4.93 | 5.44 | 5.94 | 6.43 | 6.98 | 7.51 | 8.09 | 9.46 | 10.66 | 11.21 | 11.71 | 12.25 | 12.73 | 13.55 | | 0.13 | 0.48 | 0.69 | 1.06 |
| | | 2800 | 4.12 | 5.02 | 5.54 | 6.05 | 6.54 | 7.10 | 7.64 | 8.23 | 9.60 | 10.80 | 11.34 | 11.82 | 12.35 | 12.80 | 13.53 | | 0.13 | 0.49 | 0.71 | 1.10 |
| | | 2900 | 4.19 | 5.11 | 5.64 | 6.15 | 6.65 | 7.22 | 7.77 | 8.36 | 9.73 | 10.92 | 11.44 | 11.92 | 12.42 | 12.84 | 13.47 | | 0.14 | 0.51 | 0.74 | 1.14 |
| | | 3000 | 4.25 | 5.19 | 5.73 | 6.25 | 6.76 | 7.33 | 7.88 | 8.48 | 9.85 | 11.03 | 11.53 | 11.99 | 12.45 | 12.84 | 13.37 | | 0.14 | 0.53 | 0.76 | 1.18 |
| | | 3100 | 4.31 | 5.26 | 5.81 | 6.34 | 6.86 | 7.43 | 7.99 | 8.59 | 9.96 | 11.11 | 11.60 | 12.03 | | | | | 0.15 | 0.55 | 0.79 | 1.22 |
| | 15 | 3200 | 4.36 | 5.33 | 5.89 | 6.43 | 6.95 | 7.53 | 8.09 | 8.69 | 10.05 | 11.17 | 11.64 | 12.05 | | | | | 0.15 | 0.56 | 0.81 | 1.26 |
| | | 3300 | 4.41 | 5.39 | 5.96 | 6.50 | 7.03 | 7.62 | 8.18 | 8.78 | 10.13 | 11.22 | 11.66 | 12.04 | | | | | 0.15 | 0.58 | 0.84 | 1.30 |
| | | 3400 | 4.46 | 5.45 | 6.03 | 6.58 | 7.11 | 7.70 | 8.26 | 8.86 | 10.19 | 11.24 | 11.66 | 12.00 | | | | | 0.16 | 0.60 | 0.86 | 1.34 |
| | | 3500 | 4.50 | 5.51 | 6.09 | 6.64 | 7.17 | 7.77 | 8.33 | 8.93 | 10.23 | 11.24 | 11.63 | 11.94 | | | | | 0.16 | 0.62 | 0.89 | 1.38 |
| | | 3600 | 4.54 | 5.56 | 6.14 | 6.70 | 7.24 | 7.83 | 8.39 | 8.98 | 10.26 | 11.23 | | | | | | | 0.17 | 0.63 | 0.92 | 1.42 |
| | | 3700 | 4.57 | 5.60 | 6.19 | 6.75 | 7.29 | 7.88 | 8.44 | 9.03 | 10.28 | 11.19 | | | | | | | 0.17 | 0.65 | 0.94 | 1.46 |
| | | 3800 | 4.60 | 5.64 | 6.24 | 6.80 | 7.34 | 7.93 | 8.48 | 9.06 | 10.28 | 11.13 | | | | | | | 0.18 | 0.67 | 0.97 | 1.50 |
| | | 3900 | 4.63 | 5.68 | 6.27 | 6.84 | 7.38 | 7.96 | 8.51 | 9.08 | 10.26 | 11.05 | | | | | | | 0.18 | 0.69 | 0.99 | 1.54 |
| | | 4000 | 4.65 | 5.71 | 6.31 | 6.87 | 7.41 | 7.99 | 8.53 | 9.09 | 10.23 | 10.94 | | | | | | | 0.19 | 0.71 | 1.02 | 1.58 |
| | | 4100 | 4.67 | 5.73 | 6.33 | 6.90 | 7.43 | 8.01 | 8.54 | 9.09 | 10.18 | | | | | | | | 0.19 | 0.72 | 1.04 | 1.62 |
| | 20 | 4200 | 4.68 | 5.75 | 6.35 | 6.92 | 7.45 | 8.02 | 8.55 | 9.08 | 10.11 | | | | | | | | 0.20 | 0.74 | 1.07 | 1.65 |
| | | 4300 | 4.69 | 5.77 | 6.37 | 6.93 | 7.46 | 8.02 | 8.54 | 9.06 | 10.02 | | | | | | | | 0.20 | 0.76 | 1.09 | 1.69 |
| | | 4400 | 4.70 | 5.78 | 6.38 | 6.94 | 7.46 | 8.02 | 8.52 | 9.02 | 9.92 | | | | | | | | 0.21 | 0.78 | 1.12 | 1.73 |
| | | 4500 | 4.70 | 5.78 | 6.38 | 6.93 | 7.45 | 8.00 | 8.49 | 8.97 | 9.80 | | | | | | | | 0.21 | 0.79 | 1.14 | 1.77 |
| | | 4600 | 4.70 | 5.78 | 6.37 | 6.93 | 7.44 | 7.97 | 8.45 | | | | | | | | | | 0.22 | 0.81 | 1.17 | 1.81 |
| | | 4700 | 4.69 | 5.77 | 6.36 | 6.91 | 7.41 | 7.94 | 8.39 | | | | | | | | | | 0.22 | 0.83 | 1.19 | 1.85 |
| | | 4800 | 4.68 | 5.76 | 6.35 | 6.89 | 7.38 | 7.89 | 8.33 | | | | | | | | | | 0.22 | 0.85 | 1.22 | 1.89 |
| | | 4900 | 4.66 | 5.74 | 6.32 | 6.86 | 7.34 | 7.84 | 8.26 | | | | | | | | | | 0.23 | 0.86 | 1.25 | 1.93 |
| | | 5000 | 4.64 | 5.72 | 6.29 | 6.82 | 7.29 | 7.77 | 8.17 | | | | | | | | | | 0.23 | 0.88 | 1.27 | 1.97 |
| | | | 25 | | | 30 | | | | | | | | | | | | | v (m/s) | | | |
| | | | | | | | Dynamically balanced (for details see DIN 2211) | | | | | | | | | | | | Pulleys | | | |

Where v > 30 m/s, please consult our Applications Engineering Department

SUPER TX M=S

# Power Ratings

## optibelt SUPER TX M=S Section CX/X22

## Nominal Power Rating $P_N$ (kW) for $\beta$ = 180° and $L_d$ = 3808 mm

*Table 43*

| Pulleys | v (m/s) | $n_k$ (min$^{-1}$) | Datum diameter of small pulley $d_{dk}$ (mm) 140 | 150 | 160 | 180 | 200 | 224 | 250 | 280 | 315 | 335 | 355 | 400 | 450 | 500 | 630 | Additional power (kW) per belt for speed ratio i 1,01 to 1,05 | 1,06 to 1,26 | 1,27 to 1,57 | >1,57 |
|---|---|---|---|---|---|---|---|---|---|---|---|---|---|---|---|---|---|---|---|---|---|
| Statically balanced | | **700** | 4.81 | 5.29 | 5.76 | 6.69 | 7.59 | 8.65 | 9.77 | 11.03 | 12.45 | 13.24 | 14.02 | 15.70 | 17.48 | 19.17 | 23.07 | 0.06 | 0.23 | 0.33 | 0.52 |
| | | **950** | 6.07 | 6.68 | 7.28 | 8.46 | 9.61 | 10.94 | 12.34 | 13.89 | 15.62 | 16.58 | 17.50 | 19.46 | 21.47 | 23.28 | 26.99 | 0.08 | 0.32 | 0.45 | 0.70 |
| | | **1450** | 8.23 | 9.07 | 9.89 | 11.49 | 13.01 | 14.76 | 16.54 | 18.44 | 20.47 | 21.52 | 22.50 | 24.39 | 25.99 | 27.00 | 26.57 | 0.13 | 0.48 | 0.69 | 1.07 |
| | | **2850** | 12.16 | 13.34 | 14.45 | 16.45 | 18.14 | 19.73 | 20.88 | 21.39 | 20.80 | | | | | | | 0.25 | 0.95 | 1.36 | 2.11 |
| | | 50 | 0.54 | 0.59 | 0.64 | 0.74 | 0.83 | 0.94 | 1.06 | 1.20 | 1.35 | 1.44 | 1.53 | 1.72 | 1.94 | 2.15 | 2.69 | 0.00 | 0.02 | 0.02 | 0.04 |
| | | 100 | 0.98 | 1.07 | 1.16 | 1.34 | 1.51 | 1.72 | 1.94 | 2.19 | 2.47 | 2.63 | 2.79 | 3.15 | 3.54 | 3.93 | 4.90 | 0.01 | 0.03 | 0.05 | 0.07 |
| | | 150 | 1.38 | 1.51 | 1.64 | 1.89 | 2.14 | 2.43 | 2.74 | 3.09 | 3.50 | 3.73 | 3.96 | 4.46 | 5.01 | 5.56 | 6.93 | 0.01 | 0.05 | 0.07 | 0.11 |
| | | 200 | 1.76 | 1.92 | 2.08 | 2.41 | 2.72 | 3.10 | 3.50 | 3.95 | 4.47 | 4.76 | 5.06 | 5.70 | 6.40 | 7.09 | 8.83 | 0.02 | 0.07 | 0.10 | 0.15 |
| | | 250 | 2.11 | 2.31 | 2.51 | 2.90 | 3.28 | 3.74 | 4.22 | 4.77 | 5.40 | 5.75 | 6.10 | 6.88 | 7.72 | 8.55 | 10.62 | 0.02 | 0.08 | 0.12 | 0.19 |
| | | 300 | 2.45 | 2.69 | 2.92 | 3.37 | 3.82 | 4.35 | 4.91 | 5.55 | 6.29 | 6.70 | 7.10 | 8.00 | 8.98 | 9.94 | 12.33 | 0.03 | 0.10 | 0.14 | 0.22 |
| | | 350 | 2.78 | 3.05 | 3.31 | 3.83 | 4.34 | 4.94 | 5.59 | 6.31 | 7.14 | 7.61 | 8.07 | 9.09 | 10.19 | 11.27 | 13.95 | 0.03 | 0.12 | 0.17 | 0.26 |
| | | 400 | 3.10 | 3.39 | 3.69 | 4.27 | 4.84 | 5.52 | 6.23 | 7.05 | 7.97 | 8.49 | 9.00 | 10.14 | 11.36 | 12.55 | 15.49 | 0.04 | 0.13 | 0.19 | 0.30 |
| | | 450 | 3.40 | 3.73 | 4.06 | 4.70 | 5.33 | 6.08 | 6.86 | 7.76 | 8.77 | 9.34 | 9.91 | 11.15 | 12.48 | 13.78 | 16.96 | 0.04 | 0.15 | 0.22 | 0.33 |
| | | 500 | 3.70 | 4.06 | 4.42 | 5.12 | 5.81 | 6.62 | 7.48 | 8.45 | 9.55 | 10.17 | 10.78 | 12.12 | 13.56 | 14.95 | 18.34 | 0.04 | 0.17 | 0.24 | 0.37 |
| | | 550 | 3.99 | 4.38 | 4.76 | 5.52 | 6.27 | 7.15 | 8.07 | 9.12 | 10.31 | 10.97 | 11.63 | 13.07 | 14.60 | 16.08 | 19.65 | 0.05 | 0.18 | 0.26 | 0.41 |
| | | 600 | 4.27 | 4.69 | 5.10 | 5.92 | 6.72 | 7.66 | 8.65 | 9.77 | 11.04 | 11.75 | 12.45 | 13.98 | 15.60 | 17.16 | 20.87 | 0.05 | 0.20 | 0.29 | 0.44 |
| | | 650 | 4.55 | 4.99 | 5.44 | 6.31 | 7.16 | 8.16 | 9.22 | 10.41 | 11.76 | 12.51 | 13.25 | 14.86 | 16.56 | 18.19 | 22.02 | 0.06 | 0.22 | 0.31 | 0.48 |
| | 5 | 700 | 4.81 | 5.29 | 5.76 | 6.69 | 7.59 | 8.65 | 9.77 | 11.03 | 12.45 | 13.24 | 14.02 | 15.70 | 17.48 | 19.17 | 23.07 | 0.06 | 0.23 | 0.33 | 0.52 |
| | | 750 | 5.08 | 5.58 | 6.08 | 7.06 | 8.01 | 9.13 | 10.31 | 11.64 | 13.13 | 13.95 | 14.76 | 16.52 | 18.36 | 20.10 | 24.04 | 0.07 | 0.25 | 0.36 | 0.56 |
| | | 800 | 5.33 | 5.86 | 6.39 | 7.42 | 8.42 | 9.60 | 10.84 | 12.22 | 13.78 | 14.64 | 15.48 | 17.30 | 19.20 | 20.97 | 24.93 | 0.07 | 0.27 | 0.38 | 0.59 |
| | | 850 | 5.58 | 6.14 | 6.69 | 7.77 | 8.83 | 10.06 | 11.35 | 12.80 | 14.41 | 15.31 | 16.18 | 18.06 | 20.00 | 21.80 | 25.71 | 0.07 | 0.28 | 0.41 | 0.63 |
| | | 900 | 5.83 | 6.42 | 6.99 | 8.12 | 9.22 | 10.50 | 11.85 | 13.35 | 15.03 | 15.95 | 16.85 | 18.78 | 20.76 | 22.57 | 26.40 | 0.08 | 0.30 | 0.43 | 0.67 |
| | | 950 | 6.07 | 6.68 | 7.28 | 8.46 | 9.61 | 10.94 | 12.34 | 13.89 | 15.62 | 16.58 | 17.50 | 19.46 | 21.47 | 23.28 | 26.99 | 0.08 | 0.32 | 0.45 | 0.70 |
| | | 1000 | 6.31 | 6.94 | 7.57 | 8.79 | 9.98 | 11.37 | 12.82 | 14.42 | 16.20 | 17.17 | 18.12 | 20.12 | 22.14 | 23.94 | 27.48 | 0.09 | 0.33 | 0.48 | 0.74 |
| | | 1050 | 6.54 | 7.20 | 7.85 | 9.12 | 10.35 | 11.78 | 13.28 | 14.93 | 16.76 | 17.75 | 18.71 | 20.74 | 22.76 | 24.53 | 27.86 | 0.09 | 0.35 | 0.50 | 0.78 |
| | | 1100 | 6.77 | 7.45 | 8.12 | 9.44 | 10.71 | 12.19 | 13.73 | 15.42 | 17.29 | 18.31 | 19.28 | 21.32 | 23.34 | 25.07 | 28.13 | 0.10 | 0.36 | 0.53 | 0.82 |
| | | 1150 | 6.99 | 7.70 | 8.39 | 9.75 | 11.06 | 12.59 | 14.17 | 15.90 | 17.81 | 18.84 | 19.82 | 21.87 | 23.87 | 25.55 | 28.28 | 0.10 | 0.38 | 0.55 | 0.85 |
| | | 1200 | 7.21 | 7.94 | 8.66 | 10.06 | 11.41 | 12.97 | 14.59 | 16.37 | 18.30 | 19.35 | 20.34 | 22.39 | 24.35 | 25.96 | 28.31 | 0.11 | 0.40 | 0.57 | 0.89 |
| | | 1250 | 7.42 | 8.17 | 8.91 | 10.35 | 11.75 | 13.35 | 15.01 | 16.81 | 18.78 | 19.83 | 20.83 | 22.87 | 24.78 | 26.31 | 28.23 | 0.11 | 0.41 | 0.60 | 0.93 |
| | | 1300 | 7.63 | 8.40 | 9.17 | 10.65 | 12.07 | 13.72 | 15.41 | 17.25 | 19.23 | 20.29 | 21.29 | 23.31 | 25.16 | | | 0.11 | 0.43 | 0.62 | 0.96 |
| | 10 | 1350 | 7.83 | 8.63 | 9.41 | 10.93 | 12.39 | 14.07 | 15.80 | 17.66 | 19.67 | 20.73 | 21.72 | 23.71 | 25.49 | | | 0.12 | 0.45 | 0.65 | 1.00 |
| | | 1400 | 8.04 | 8.85 | 9.66 | 11.21 | 12.71 | 14.42 | 16.17 | 18.06 | 20.08 | 21.14 | 22.12 | 24.07 | 25.77 | | | 0.12 | 0.46 | 0.67 | 1.04 |
| | | 1450 | 8.23 | 9.07 | 9.89 | 11.49 | 13.01 | 14.76 | 16.54 | 18.44 | 20.47 | 21.52 | 22.50 | 24.39 | 25.99 | | | 0.13 | 0.48 | 0.69 | 1.07 |
| | | 1500 | 8.43 | 9.28 | 10.12 | 11.75 | 13.31 | 15.08 | 16.89 | 18.81 | 20.83 | 21.88 | 22.84 | 24.67 | 26.15 | | | 0.13 | 0.50 | 0.72 | 1.11 |
| | | 1550 | 8.61 | 9.49 | 10.35 | 12.01 | 13.60 | 15.40 | 17.22 | 19.16 | 21.18 | 22.21 | 23.15 | 24.91 | | | | 0.14 | 0.51 | 0.74 | 1.15 |
| | | 1600 | 8.80 | 9.70 | 10.57 | 12.27 | 13.88 | 15.71 | 17.55 | 19.49 | 21.50 | 22.52 | 23.43 | 25.11 | | | | 0.14 | 0.53 | 0.77 | 1.19 |
| | | 1650 | 8.98 | 9.90 | 10.79 | 12.51 | 14.15 | 16.00 | 17.86 | 19.81 | 21.80 | 22.80 | 23.68 | 25.27 | | | | 0.15 | 0.55 | 0.79 | 1.22 |
| | | 1700 | 9.16 | 10.09 | 11.00 | 12.76 | 14.42 | 16.29 | 18.16 | 20.11 | 22.07 | 23.05 | 23.90 | 25.37 | | | | 0.15 | 0.56 | 0.81 | 1.26 |
| | | 1750 | 9.33 | 10.28 | 11.21 | 12.99 | 14.68 | 16.56 | 18.44 | 20.38 | 22.33 | 23.27 | 24.09 | 25.44 | | | | 0.15 | 0.58 | 0.84 | 1.30 |
| | | 1800 | 9.50 | 10.47 | 11.41 | 13.22 | 14.92 | 16.83 | 18.71 | 20.65 | 22.55 | 23.46 | | | | | | 0.16 | 0.60 | 0.86 | 1.33 |
| | | 1850 | 9.67 | 10.65 | 11.61 | 13.44 | 15.16 | 17.08 | 18.97 | 20.89 | 22.75 | 23.63 | | | | | | 0.16 | 0.61 | 0.88 | 1.37 |
| | | 1900 | 9.83 | 10.83 | 11.80 | 13.66 | 15.40 | 17.33 | 19.21 | 21.11 | 22.93 | 23.76 | | | | | | 0.17 | 0.63 | 0.91 | 1.41 |
| | | 1950 | 9.99 | 11.00 | 11.99 | 13.87 | 15.62 | 17.56 | 19.44 | 21.32 | 23.08 | 23.86 | | | | | | 0.17 | 0.65 | 0.93 | 1.45 |
| | | 2000 | 10.14 | 11.17 | 12.17 | 14.07 | 15.84 | 17.78 | 19.66 | 21.50 | 23.20 | 23.93 | | | | | | 0.18 | 0.66 | 0.96 | 1.48 |
| | 15 | 2050 | 10.29 | 11.33 | 12.34 | 14.26 | 16.04 | 17.99 | 19.86 | 21.67 | 23.30 | | | | | | | 0.18 | 0.68 | 0.98 | 1.52 |
| | | 2100 | 10.44 | 11.49 | 12.52 | 14.45 | 16.24 | 18.19 | 20.04 | 21.81 | 23.37 | | | | | | | 0.18 | 0.70 | 1.00 | 1.56 |
| | | 2150 | 10.58 | 11.65 | 12.68 | 14.64 | 16.43 | 18.38 | 20.21 | 21.94 | 23.41 | | | | | | | 0.19 | 0.71 | 1.03 | 1.59 |
| | | 2200 | 10.72 | 11.80 | 12.84 | 14.81 | 16.62 | 18.56 | 20.36 | 22.05 | 23.42 | | | | | | | 0.19 | 0.73 | 1.05 | 1.63 |
| | | 2250 | 10.85 | 11.95 | 13.00 | 14.98 | 16.79 | 18.72 | 20.50 | 22.13 | 23.40 | | | | | | | 0.20 | 0.75 | 1.08 | 1.67 |
| | | 2300 | 10.98 | 12.09 | 13.15 | 15.14 | 16.95 | 18.87 | 20.63 | 22.19 | | | | | | | | 0.20 | 0.76 | 1.10 | 1.70 |
| | | 2350 | 11.11 | 12.22 | 13.29 | 15.30 | 17.11 | 19.01 | 20.73 | 22.23 | | | | | | | | 0.21 | 0.78 | 1.12 | 1.74 |
| | | 2400 | 11.23 | 12.36 | 13.43 | 15.44 | 17.25 | 19.14 | 20.82 | 22.25 | | | | | | | | 0.21 | 0.80 | 1.15 | 1.78 |
| | | 2450 | 11.35 | 12.48 | 13.57 | 15.58 | 17.39 | 19.26 | 20.90 | 22.25 | | | | | | | | 0.22 | 0.81 | 1.17 | 1.82 |
| | | 2500 | 11.47 | 12.61 | 13.70 | 15.72 | 17.52 | 19.36 | 20.96 | 22.23 | | | | | | | | 0.22 | 0.83 | 1.20 | 1.85 |
| | | 2550 | 11.58 | 12.73 | 13.82 | 15.84 | 17.63 | 19.45 | 21.00 | | | | | | | | | 0.22 | 0.85 | 1.22 | 1.89 |
| | | 2600 | 11.68 | 12.84 | 13.94 | 15.96 | 17.74 | 19.53 | 21.02 | | | | | | | | | 0.23 | 0.86 | 1.24 | 1.93 |
| | | 2650 | 11.79 | 12.95 | 14.05 | 16.08 | 17.84 | 19.60 | 21.03 | | | | | | | | | 0.23 | 0.88 | 1.27 | 1.96 |
| | 20 | 2700 | 11.89 | 13.05 | 14.16 | 16.18 | 17.93 | 19.65 | 21.02 | | | | | | | | | 0.24 | 0.90 | 1.29 | 2.00 |
| | | 2750 | 11.98 | 13.15 | 14.26 | 16.28 | 18.01 | 19.69 | 20.99 | | | | | | | | | 0.24 | 0.91 | 1.32 | 2.04 |
| | | 2800 | 12.07 | 13.25 | 14.36 | 16.37 | 18.08 | 19.72 | | | | | | | | | | 0.25 | 0.93 | 1.34 | 2.08 |
| | | 2850 | 12.16 | 13.34 | 14.45 | 16.45 | 18.14 | 19.73 | | | | | | | | | | 0.25 | 0.95 | 1.36 | 2.11 |
| | | 2900 | 12.24 | 13.42 | 14.53 | 16.52 | 18.19 | 19.73 | | | | | | | | | | 0.26 | 0.96 | 1.39 | 2.15 |
| | | 2950 | 12.32 | 13.50 | 14.61 | 16.59 | 18.23 | 19.72 | | | | | | | | | | 0.26 | 0.98 | 1.41 | 2.19 |
| | | 3000 | 12.39 | 13.58 | 14.68 | 16.65 | 18.26 | 19.69 | | | | | | | | | | 0.26 | 0.99 | 1.43 | 2.22 |
| | | 3050 | 12.46 | 13.65 | 14.75 | 16.70 | 18.27 | | | | | | | | | | | 0.27 | 1.01 | 1.46 | 2.26 |
| | | 3100 | 12.53 | 13.71 | 14.81 | 16.74 | 18.28 | | | | | | | | | | | 0.27 | 1.03 | 1.48 | 2.30 |
| | | 3150 | 12.59 | 13.77 | 14.87 | 16.77 | 18.28 | | | | | | | | | | | 0.28 | 1.04 | 1.51 | 2.33 |
| | | 3200 | 12.65 | 13.83 | 14.92 | 16.80 | 18.26 | | | | | | | | | | | 0.28 | 1.06 | 1.53 | 2.37 |
| | | 3250 | 12.70 | 13.88 | 14.96 | 16.82 | 18.24 | | | | | | | | | | | 0.29 | 1.08 | 1.55 | 2.41 |
| | | 3300 | 12.75 | 13.92 | 15.00 | 16.83 | | | | | | | | | | | | 0.29 | 1.09 | 1.58 | 2.45 |
| | | 3350 | 12.79 | 13.96 | 15.03 | 16.83 | | | | | | | | | | | | 0.29 | 1.11 | 1.60 | 2.48 |
| | 25 | 3400 | 12.83 | 14.00 | 15.05 | 16.82 | | | | | | | | | | | | 0.30 | 1.13 | 1.63 | 2.52 |
| | | 3450 | 12.87 | 14.03 | 15.07 | 16.81 | | | | | | | | | | | | 0.30 | 1.14 | 1.65 | 2.56 |
| | | 3500 | 12.90 | 14.05 | 15.08 | 16.78 | | | | | | | | | | | | 0.31 | 1.16 | 1.67 | 2.59 |
| | | | | | | 30 | | | | | | | | | | | | | | v (m/s) | |
| | | | | | | Dynamically balanced (for details see DIN 2211) | | | | | | | | | | | | | | Pulleys | |

Where v > 30 m/s, please consult our Applications Engineering Department

SUPERTX

# Power Ratings

## Section 5 – raw edge – moulded cogged

## Nominal Power Rating $P_N$ (kW) for $\beta$ = 180° and $L_d$ = 312 mm

*Table 44*

| Pulleys | v (m/s) | $n_k$ (min$^{-1}$) | Datum diameter of small pulley $d_{dk}$ (mm) 16 | 18 | 20 | 22.4 | 25 | 28 | 31.5 | 33.5 | 40 | 45 | Additional power (kW) per belt for speed ratio i 1,01 to 1,05 | 1,06 to 1,26 | 1,27 to 1,57 | >1,57 |
|---|---|---|---|---|---|---|---|---|---|---|---|---|---|---|---|---|
| Statically balanced | | **700** | 0.02 | 0.02 | 0.03 | 0.03 | 0.04 | 0.04 | 0.05 | 0.06 | 0.07 | 0.08 | 0.000 | 0.001 | 0.002 | 0.003 |
| | | **950** | 0.02 | 0.03 | 0.04 | 0.04 | 0.05 | 0.06 | 0.07 | 0.07 | 0.09 | 0.10 | 0.000 | 0.002 | 0.002 | 0.004 |
| | | **1450** | 0.03 | 0.04 | 0.05 | 0.06 | 0.07 | 0.08 | 0.10 | 0.11 | 0.13 | 0.15 | 0.001 | 0.002 | 0.004 | 0.005 |
| | | **2850** | 0.06 | 0.07 | 0.09 | 0.11 | 0.13 | 0.15 | 0.18 | 0.19 | 0.24 | 0.28 | 0.001 | 0.005 | 0.007 | 0.011 |
| | | 200 | 0.01 | 0.01 | 0.01 | 0.01 | 0.01 | 0.02 | 0.02 | 0.02 | 0.02 | 0.03 | 0.000 | 0.000 | 0.000 | 0.001 |
| | | 300 | 0.01 | 0.01 | 0.01 | 0.02 | 0.02 | 0.02 | 0.02 | 0.03 | 0.03 | 0.04 | 0.000 | 0.001 | 0.001 | 0.001 |
| | | 400 | 0.01 | 0.01 | 0.02 | 0.02 | 0.02 | 0.03 | 0.03 | 0.03 | 0.04 | 0.05 | 0.000 | 0.001 | 0.001 | 0.001 |
| | | 500 | 0.01 | 0.02 | 0.02 | 0.02 | 0.03 | 0.03 | 0.04 | 0.04 | 0.05 | 0.06 | 0.000 | 0.001 | 0.001 | 0.002 |
| | | 600 | 0.02 | 0.02 | 0.02 | 0.03 | 0.03 | 0.04 | 0.05 | 0.05 | 0.06 | 0.07 | 0.000 | 0.001 | 0.001 | 0.002 |
| | | 700 | 0.02 | 0.02 | 0.03 | 0.03 | 0.04 | 0.04 | 0.05 | 0.06 | 0.07 | 0.08 | 0.000 | 0.001 | 0.002 | 0.003 |
| | | 800 | 0.02 | 0.03 | 0.03 | 0.04 | 0.04 | 0.05 | 0.06 | 0.06 | 0.08 | 0.09 | 0.000 | 0.001 | 0.002 | 0.003 |
| | | 900 | 0.02 | 0.03 | 0.03 | 0.04 | 0.05 | 0.06 | 0.06 | 0.07 | 0.09 | 0.10 | 0.000 | 0.002 | 0.002 | 0.003 |
| | | 1000 | 0.03 | 0.03 | 0.04 | 0.04 | 0.05 | 0.06 | 0.07 | 0.08 | 0.10 | 0.11 | 0.000 | 0.002 | 0.002 | 0.004 |
| | | 1100 | 0.03 | 0.03 | 0.04 | 0.05 | 0.06 | 0.07 | 0.08 | 0.08 | 0.10 | 0.12 | 0.000 | 0.002 | 0.003 | 0.004 |
| | | 1200 | 0.03 | 0.04 | 0.04 | 0.05 | 0.06 | 0.07 | 0.08 | 0.09 | 0.11 | 0.13 | 0.001 | 0.002 | 0.003 | 0.004 |
| | | 1300 | 0.03 | 0.04 | 0.05 | 0.06 | 0.07 | 0.08 | 0.09 | 0.10 | 0.12 | 0.14 | 0.001 | 0.002 | 0.003 | 0.005 |
| | | 1400 | 0.03 | 0.04 | 0.05 | 0.06 | 0.07 | 0.08 | 0.10 | 0.10 | 0.13 | 0.15 | 0.001 | 0.002 | 0.003 | 0.005 |
| | | 1500 | 0.03 | 0.04 | 0.05 | 0.06 | 0.07 | 0.09 | 0.10 | 0.11 | 0.14 | 0.16 | 0.001 | 0.003 | 0.004 | 0.006 |
| | | 1600 | 0.04 | 0.05 | 0.06 | 0.07 | 0.08 | 0.09 | 0.11 | 0.12 | 0.14 | 0.17 | 0.001 | 0.003 | 0.004 | 0.006 |
| | | 1700 | 0.04 | 0.05 | 0.06 | 0.07 | 0.08 | 0.10 | 0.11 | 0.12 | 0.15 | 0.18 | 0.001 | 0.003 | 0.004 | 0.006 |
| | | 1800 | 0.04 | 0.05 | 0.06 | 0.07 | 0.09 | 0.10 | 0.12 | 0.13 | 0.16 | 0.18 | 0.001 | 0.003 | 0.004 | 0.007 |
| | | 1900 | 0.04 | 0.05 | 0.06 | 0.08 | 0.09 | 0.11 | 0.12 | 0.13 | 0.17 | 0.19 | 0.001 | 0.003 | 0.005 | 0.007 |
| | | 2000 | 0.04 | 0.06 | 0.07 | 0.08 | 0.09 | 0.11 | 0.13 | 0.14 | 0.18 | 0.20 | 0.001 | 0.003 | 0.005 | 0.007 |
| | | 2100 | 0.05 | 0.06 | 0.07 | 0.08 | 0.10 | 0.12 | 0.14 | 0.15 | 0.18 | 0.21 | 0.001 | 0.004 | 0.005 | 0.008 |
| | | 2200 | 0.05 | 0.06 | 0.07 | 0.09 | 0.10 | 0.12 | 0.14 | 0.15 | 0.19 | 0.22 | 0.001 | 0.004 | 0.005 | 0.008 |
| | 2 | 2300 | 0.05 | 0.06 | 0.07 | 0.09 | 0.11 | 0.13 | 0.15 | 0.16 | 0.20 | 0.23 | 0.001 | 0.004 | 0.006 | 0.009 |
| | | 2400 | 0.05 | 0.06 | 0.08 | 0.09 | 0.11 | 0.13 | 0.15 | 0.17 | 0.21 | 0.24 | 0.001 | 0.004 | 0.006 | 0.009 |
| | | 2500 | 0.05 | 0.07 | 0.08 | 0.10 | 0.11 | 0.13 | 0.16 | 0.17 | 0.21 | 0.25 | 0.001 | 0.004 | 0.006 | 0.009 |
| | | 2600 | 0.05 | 0.07 | 0.08 | 0.10 | 0.12 | 0.14 | 0.16 | 0.18 | 0.22 | 0.25 | 0.001 | 0.004 | 0.006 | 0.010 |
| | | 2700 | 0.06 | 0.07 | 0.09 | 0.10 | 0.12 | 0.14 | 0.17 | 0.18 | 0.23 | 0.26 | 0.001 | 0.005 | 0.007 | 0.010 |
| | | 2800 | 0.06 | 0.07 | 0.09 | 0.11 | 0.13 | 0.15 | 0.17 | 0.19 | 0.24 | 0.27 | 0.001 | 0.005 | 0.007 | 0.010 |
| | | 2900 | 0.06 | 0.07 | 0.09 | 0.11 | 0.13 | 0.15 | 0.18 | 0.19 | 0.24 | 0.28 | 0.001 | 0.005 | 0.007 | 0.011 |
| | | 3000 | 0.06 | 0.08 | 0.09 | 0.11 | 0.13 | 0.16 | 0.19 | 0.20 | 0.25 | 0.29 | 0.001 | 0.005 | 0.007 | 0.011 |
| | | 3100 | 0.06 | 0.08 | 0.10 | 0.12 | 0.14 | 0.16 | 0.19 | 0.21 | 0.26 | 0.30 | 0.001 | 0.005 | 0.007 | 0.012 |
| | | 3200 | 0.06 | 0.08 | 0.10 | 0.12 | 0.14 | 0.17 | 0.20 | 0.21 | 0.27 | 0.31 | 0.001 | 0.005 | 0.008 | 0.012 |
| | | 3300 | 0.06 | 0.08 | 0.10 | 0.12 | 0.14 | 0.17 | 0.20 | 0.22 | 0.27 | 0.31 | 0.001 | 0.006 | 0.008 | 0.012 |
| | | 3400 | 0.07 | 0.08 | 0.10 | 0.13 | 0.15 | 0.18 | 0.21 | 0.22 | 0.28 | 0.32 | 0.002 | 0.006 | 0.008 | 0.013 |
| | | 3500 | 0.07 | 0.09 | 0.11 | 0.13 | 0.15 | 0.18 | 0.21 | 0.23 | 0.29 | 0.33 | 0.002 | 0.006 | 0.008 | 0.013 |
| | | 3600 | 0.07 | 0.09 | 0.11 | 0.13 | 0.16 | 0.18 | 0.22 | 0.24 | 0.29 | 0.34 | 0.002 | 0.006 | 0.009 | 0.013 |
| | | 3700 | 0.07 | 0.09 | 0.11 | 0.13 | 0.16 | 0.19 | 0.22 | 0.24 | 0.30 | 0.35 | 0.002 | 0.006 | 0.009 | 0.014 |
| | | 3800 | 0.07 | 0.09 | 0.11 | 0.14 | 0.16 | 0.19 | 0.23 | 0.25 | 0.31 | 0.36 | 0.002 | 0.006 | 0.009 | 0.014 |
| | | 3900 | 0.07 | 0.09 | 0.12 | 0.14 | 0.17 | 0.20 | 0.23 | 0.25 | 0.32 | 0.36 | 0.002 | 0.007 | 0.009 | 0.015 |
| | | 4000 | 0.07 | 0.10 | 0.12 | 0.14 | 0.17 | 0.20 | 0.24 | 0.26 | 0.32 | 0.37 | 0.002 | 0.007 | 0.010 | 0.015 |
| | | 4100 | 0.08 | 0.10 | 0.12 | 0.15 | 0.17 | 0.21 | 0.24 | 0.26 | 0.33 | 0.38 | 0.002 | 0.007 | 0.010 | 0.015 |
| | | 4200 | 0.08 | 0.10 | 0.12 | 0.15 | 0.18 | 0.21 | 0.25 | 0.27 | 0.34 | 0.39 | 0.002 | 0.007 | 0.010 | 0.016 |
| | | 4300 | 0.08 | 0.10 | 0.13 | 0.15 | 0.18 | 0.21 | 0.25 | 0.27 | 0.34 | 0.40 | 0.002 | 0.007 | 0.010 | 0.016 |
| | | 4400 | 0.08 | 0.10 | 0.13 | 0.16 | 0.18 | 0.22 | 0.26 | 0.28 | 0.35 | 0.40 | 0.002 | 0.007 | 0.011 | 0.016 |
| | | 4500 | 0.08 | 0.11 | 0.13 | 0.16 | 0.19 | 0.22 | 0.26 | 0.28 | 0.36 | 0.41 | 0.002 | 0.008 | 0.011 | 0.017 |
| | | 4600 | 0.08 | 0.11 | 0.13 | 0.16 | 0.19 | 0.23 | 0.27 | 0.29 | 0.36 | 0.42 | 0.002 | 0.008 | 0.011 | 0.017 |
| | | 4700 | 0.08 | 0.11 | 0.13 | 0.16 | 0.20 | 0.23 | 0.27 | 0.30 | 0.37 | 0.43 | 0.002 | 0.008 | 0.011 | 0.018 |
| | | 4800 | 0.09 | 0.11 | 0.14 | 0.17 | 0.20 | 0.24 | 0.28 | 0.30 | 0.38 | 0.44 | 0.002 | 0.008 | 0.012 | 0.018 |
| | | 4900 | 0.09 | 0.11 | 0.14 | 0.17 | 0.20 | 0.24 | 0.28 | 0.31 | 0.38 | 0.44 | 0.002 | 0.008 | 0.012 | 0.018 |
| | | 5000 | 0.09 | 0.12 | 0.14 | 0.17 | 0.21 | 0.24 | 0.29 | 0.31 | 0.39 | 0.45 | 0.002 | 0.008 | 0.012 | 0.019 |
| | | 5100 | 0.09 | 0.12 | 0.14 | 0.18 | 0.21 | 0.25 | 0.29 | 0.32 | 0.40 | 0.46 | 0.002 | 0.009 | 0.012 | 0.019 |
| | | 5200 | 0.09 | 0.12 | 0.15 | 0.18 | 0.21 | 0.25 | 0.30 | 0.32 | 0.40 | 0.47 | 0.002 | 0.009 | 0.013 | 0.019 |
| | | 5300 | 0.09 | 0.12 | 0.15 | 0.18 | 0.22 | 0.26 | 0.30 | 0.33 | 0.41 | 0.47 | 0.002 | 0.009 | 0.013 | 0.020 |
| | | 5400 | 0.09 | 0.12 | 0.15 | 0.18 | 0.22 | 0.26 | 0.31 | 0.33 | 0.42 | 0.48 | 0.002 | 0.009 | 0.013 | 0.020 |
| | | 5500 | 0.10 | 0.12 | 0.15 | 0.19 | 0.22 | 0.26 | 0.31 | 0.34 | 0.42 | 0.49 | 0.002 | 0.009 | 0.013 | 0.021 |
| | | 5600 | 0.10 | 0.13 | 0.16 | 0.19 | 0.23 | 0.27 | 0.32 | 0.34 | 0.43 | 0.50 | 0.002 | 0.009 | 0.014 | 0.021 |
| | | 5700 | 0.10 | 0.13 | 0.16 | 0.19 | 0.23 | 0.27 | 0.32 | 0.35 | 0.44 | 0.50 | 0.003 | 0.010 | 0.014 | 0.021 |
| | | 5800 | 0.10 | 0.13 | 0.16 | 0.19 | 0.23 | 0.28 | 0.33 | 0.35 | 0.44 | 0.51 | 0.003 | 0.010 | 0.014 | 0.022 |
| | 5 | 5900 | 0.10 | 0.13 | 0.16 | 0.20 | 0.24 | 0.28 | 0.33 | 0.36 | 0.45 | 0.52 | 0.003 | 0.010 | 0.014 | 0.022 |
| | | 6000 | 0.10 | 0.13 | 0.16 | 0.20 | 0.24 | 0.28 | 0.34 | 0.36 | 0.46 | 0.53 | 0.003 | 0.010 | 0.015 | 0.022 |
| | | | | | | | | | | 10 | | | v (m/s) | | | |
| | | | Statically balanced | | | | | | | | | | Pulleys | | | |

# Power Ratings

## Section Y/6 – raw edge – moulded cogged

## Nominal Power Rating $P_N$ (kW) for $\beta$ = 180° and $L_d$ = 315 mm

*Table 45*

| Pulleys | v (m/s) | $n_k$ (min$^{-1}$) | Datum diameter of small pulley $d_{dk}$ (mm) 20 | 22.4 | 25 | 28 | 31.5 | 35.5 | 40 | 45 | 50 | 56 | Additional power (kW) per belt for speed ratio i 1,01 to 1,05 | 1,06 to 1,26 | 1,27 to 1,57 | >1,57 |
|---|---|---|---|---|---|---|---|---|---|---|---|---|---|---|---|---|
| Statically balanced | | **700** | 0.03 | 0.03 | 0.04 | 0.05 | 0.06 | 0.08 | 0.09 | 0.11 | 0.12 | 0.14 | 0.001 | 0.003 | 0.005 | 0.008 |
| | | **950** | 0.03 | 0.04 | 0.05 | 0.07 | 0.08 | 0.10 | 0.12 | 0.14 | 0.16 | 0.18 | 0.001 | 0.005 | 0.007 | 0.011 |
| | | **1450** | 0.05 | 0.06 | 0.08 | 0.10 | 0.12 | 0.15 | 0.17 | 0.20 | 0.24 | 0.27 | 0.002 | 0.007 | 0.010 | 0.016 |
| | | **2850** | 0.08 | 0.11 | 0.14 | 0.18 | 0.22 | 0.27 | 0.32 | 0.38 | 0.43 | 0.50 | 0.004 | 0.014 | 0.020 | 0.032 |
| | | 200 | 0.01 | 0.01 | 0.01 | 0.02 | 0.02 | 0.02 | 0.03 | 0.03 | 0.04 | 0.04 | 0.000 | 0.001 | 0.001 | 0.002 |
| | | 300 | 0.01 | 0.02 | 0.02 | 0.02 | 0.03 | 0.03 | 0.04 | 0.05 | 0.06 | 0.06 | 0.000 | 0.001 | 0.002 | 0.003 |
| | | 400 | 0.02 | 0.02 | 0.03 | 0.03 | 0.04 | 0.05 | 0.05 | 0.06 | 0.07 | 0.08 | 0.001 | 0.002 | 0.003 | 0.004 |
| | | 500 | 0.02 | 0.02 | 0.03 | 0.04 | 0.05 | 0.06 | 0.07 | 0.08 | 0.09 | 0.10 | 0.001 | 0.002 | 0.004 | 0.006 |
| | | 600 | 0.02 | 0.03 | 0.04 | 0.04 | 0.05 | 0.07 | 0.08 | 0.09 | 0.10 | 0.12 | 0.001 | 0.003 | 0.004 | 0.007 |
| | | 700 | 0.03 | 0.03 | 0.04 | 0.05 | 0.06 | 0.08 | 0.09 | 0.11 | 0.12 | 0.14 | 0.001 | 0.003 | 0.005 | 0.008 |
| | | 800 | 0.03 | 0.04 | 0.05 | 0.06 | 0.07 | 0.08 | 0.10 | 0.12 | 0.14 | 0.16 | 0.001 | 0.004 | 0.006 | 0.009 |
| | | 900 | 0.03 | 0.04 | 0.05 | 0.06 | 0.08 | 0.09 | 0.11 | 0.13 | 0.15 | 0.18 | 0.001 | 0.004 | 0.006 | 0.010 |
| | | 1000 | 0.03 | 0.04 | 0.06 | 0.07 | 0.09 | 0.10 | 0.12 | 0.15 | 0.17 | 0.19 | 0.001 | 0.005 | 0.007 | 0.011 |
| | | 1100 | 0.04 | 0.05 | 0.06 | 0.08 | 0.09 | 0.11 | 0.14 | 0.16 | 0.18 | 0.21 | 0.001 | 0.005 | 0.008 | 0.012 |
| | | 1200 | 0.04 | 0.05 | 0.07 | 0.08 | 0.10 | 0.12 | 0.15 | 0.17 | 0.20 | 0.23 | 0.002 | 0.006 | 0.009 | 0.013 |
| | | 1300 | 0.04 | 0.06 | 0.07 | 0.09 | 0.11 | 0.13 | 0.16 | 0.19 | 0.21 | 0.25 | 0.002 | 0.006 | 0.009 | 0.014 |
| | | 1400 | 0.04 | 0.06 | 0.08 | 0.09 | 0.12 | 0.14 | 0.17 | 0.20 | 0.23 | 0.26 | 0.002 | 0.007 | 0.010 | 0.016 |
| | | 1500 | 0.05 | 0.06 | 0.08 | 0.10 | 0.12 | 0.15 | 0.18 | 0.21 | 0.24 | 0.28 | 0.002 | 0.007 | 0.011 | 0.017 |
| | | 1600 | 0.05 | 0.07 | 0.09 | 0.11 | 0.13 | 0.16 | 0.19 | 0.22 | 0.26 | 0.30 | 0.002 | 0.008 | 0.011 | 0.018 |
| | | 1700 | 0.05 | 0.07 | 0.09 | 0.11 | 0.14 | 0.17 | 0.20 | 0.24 | 0.27 | 0.31 | 0.002 | 0.008 | 0.012 | 0.019 |
| | | 1800 | 0.05 | 0.07 | 0.09 | 0.12 | 0.15 | 0.18 | 0.21 | 0.25 | 0.29 | 0.33 | 0.002 | 0.009 | 0.013 | 0.020 |
| | 2 | 1900 | 0.06 | 0.08 | 0.10 | 0.12 | 0.15 | 0.19 | 0.22 | 0.26 | 0.30 | 0.35 | 0.003 | 0.009 | 0.014 | 0.021 |
| | | 2000 | 0.06 | 0.08 | 0.10 | 0.13 | 0.16 | 0.19 | 0.23 | 0.27 | 0.32 | 0.36 | 0.003 | 0.010 | 0.014 | 0.022 |
| | | 2100 | 0.06 | 0.08 | 0.11 | 0.14 | 0.17 | 0.20 | 0.24 | 0.29 | 0.33 | 0.38 | 0.003 | 0.010 | 0.015 | 0.023 |
| | | 2200 | 0.06 | 0.09 | 0.11 | 0.14 | 0.17 | 0.21 | 0.25 | 0.30 | 0.34 | 0.40 | 0.003 | 0.011 | 0.016 | 0.024 |
| | | 2300 | 0.07 | 0.09 | 0.12 | 0.15 | 0.18 | 0.22 | 0.26 | 0.31 | 0.36 | 0.41 | 0.003 | 0.011 | 0.016 | 0.026 |
| | | 2400 | 0.07 | 0.09 | 0.12 | 0.15 | 0.19 | 0.23 | 0.27 | 0.32 | 0.37 | 0.43 | 0.003 | 0.012 | 0.017 | 0.027 |
| | | 2500 | 0.07 | 0.10 | 0.13 | 0.16 | 0.19 | 0.24 | 0.28 | 0.33 | 0.38 | 0.44 | 0.003 | 0.012 | 0.018 | 0.028 |
| | | 2600 | 0.07 | 0.10 | 0.13 | 0.16 | 0.20 | 0.24 | 0.29 | 0.35 | 0.40 | 0.46 | 0.003 | 0.013 | 0.019 | 0.029 |
| | | 2700 | 0.08 | 0.10 | 0.13 | 0.17 | 0.21 | 0.25 | 0.30 | 0.36 | 0.41 | 0.48 | 0.004 | 0.013 | 0.019 | 0.030 |
| | | 2800 | 0.08 | 0.11 | 0.14 | 0.17 | 0.22 | 0.26 | 0.31 | 0.37 | 0.43 | 0.49 | 0.004 | 0.014 | 0.020 | 0.031 |
| | | 2900 | 0.08 | 0.11 | 0.14 | 0.18 | 0.22 | 0.27 | 0.32 | 0.38 | 0.44 | 0.51 | 0.004 | 0.014 | 0.021 | 0.032 |
| | | 3000 | 0.08 | 0.11 | 0.15 | 0.18 | 0.23 | 0.28 | 0.33 | 0.39 | 0.45 | 0.52 | 0.004 | 0.015 | 0.021 | 0.033 |
| | | 3100 | 0.09 | 0.12 | 0.15 | 0.19 | 0.24 | 0.29 | 0.34 | 0.40 | 0.47 | 0.54 | 0.004 | 0.015 | 0.022 | 0.034 |
| | | 3200 | 0.09 | 0.12 | 0.16 | 0.20 | 0.24 | 0.29 | 0.35 | 0.42 | 0.48 | 0.55 | 0.004 | 0.016 | 0.023 | 0.036 |
| | | 3300 | 0.09 | 0.12 | 0.16 | 0.20 | 0.25 | 0.30 | 0.36 | 0.43 | 0.49 | 0.57 | 0.004 | 0.016 | 0.024 | 0.037 |
| | | 3400 | 0.09 | 0.13 | 0.16 | 0.21 | 0.25 | 0.31 | 0.37 | 0.44 | 0.50 | 0.58 | 0.004 | 0.017 | 0.024 | 0.038 |
| | | 3500 | 0.09 | 0.13 | 0.17 | 0.21 | 0.26 | 0.32 | 0.38 | 0.45 | 0.52 | 0.60 | 0.005 | 0.017 | 0.025 | 0.039 |
| | | 3600 | 0.10 | 0.13 | 0.17 | 0.22 | 0.27 | 0.33 | 0.39 | 0.46 | 0.53 | 0.61 | 0.005 | 0.018 | 0.026 | 0.040 |
| | | 3700 | 0.10 | 0.14 | 0.18 | 0.22 | 0.27 | 0.33 | 0.40 | 0.47 | 0.54 | 0.62 | 0.005 | 0.018 | 0.026 | 0.041 |
| | | 3800 | 0.10 | 0.14 | 0.18 | 0.23 | 0.28 | 0.34 | 0.41 | 0.48 | 0.55 | 0.64 | 0.005 | 0.019 | 0.027 | 0.042 |
| | | 3900 | 0.10 | 0.14 | 0.18 | 0.23 | 0.29 | 0.35 | 0.42 | 0.49 | 0.57 | 0.65 | 0.005 | 0.019 | 0.028 | 0.043 |
| | | 4000 | 0.10 | 0.14 | 0.19 | 0.24 | 0.29 | 0.36 | 0.43 | 0.50 | 0.58 | 0.67 | 0.005 | 0.020 | 0.029 | 0.044 |
| | | 4100 | 0.11 | 0.15 | 0.19 | 0.24 | 0.30 | 0.36 | 0.44 | 0.51 | 0.59 | 0.68 | 0.005 | 0.020 | 0.029 | 0.045 |
| | | 4200 | 0.11 | 0.15 | 0.19 | 0.25 | 0.31 | 0.37 | 0.44 | 0.52 | 0.60 | 0.69 | 0.006 | 0.021 | 0.030 | 0.047 |
| | | 4300 | 0.11 | 0.15 | 0.20 | 0.25 | 0.31 | 0.38 | 0.45 | 0.54 | 0.61 | 0.71 | 0.006 | 0.021 | 0.031 | 0.048 |
| | | 4400 | 0.11 | 0.16 | 0.20 | 0.26 | 0.32 | 0.39 | 0.46 | 0.55 | 0.63 | 0.72 | 0.006 | 0.022 | 0.031 | 0.049 |
| | | 4500 | 0.11 | 0.16 | 0.21 | 0.26 | 0.32 | 0.39 | 0.47 | 0.56 | 0.64 | 0.73 | 0.006 | 0.022 | 0.032 | 0.050 |
| | | 4600 | 0.12 | 0.16 | 0.21 | 0.27 | 0.33 | 0.40 | 0.48 | 0.57 | 0.65 | 0.75 | 0.006 | 0.023 | 0.033 | 0.051 |
| | 5 | 4700 | 0.12 | 0.16 | 0.21 | 0.27 | 0.34 | 0.41 | 0.49 | 0.58 | 0.66 | 0.76 | 0.006 | 0.023 | 0.034 | 0.052 |
| | | 4800 | 0.12 | 0.17 | 0.22 | 0.28 | 0.34 | 0.42 | 0.50 | 0.59 | 0.67 | 0.77 | 0.006 | 0.024 | 0.034 | 0.053 |
| | | 4900 | 0.12 | 0.17 | 0.22 | 0.28 | 0.35 | 0.42 | 0.51 | 0.60 | 0.68 | 0.79 | 0.006 | 0.024 | 0.035 | 0.054 |
| | | 5000 | 0.12 | 0.17 | 0.22 | 0.28 | 0.35 | 0.43 | 0.51 | 0.61 | 0.70 | 0.80 | 0.007 | 0.025 | 0.036 | 0.055 |
| | | 5100 | 0.12 | 0.17 | 0.23 | 0.29 | 0.36 | 0.44 | 0.52 | 0.62 | 0.71 | 0.81 | 0.007 | 0.025 | 0.037 | 0.057 |
| | | 5200 | 0.13 | 0.18 | 0.23 | 0.29 | 0.36 | 0.44 | 0.53 | 0.63 | 0.72 | 0.82 | 0.007 | 0.026 | 0.037 | 0.058 |
| | | 5300 | 0.13 | 0.18 | 0.24 | 0.30 | 0.37 | 0.45 | 0.54 | 0.64 | 0.73 | 0.84 | 0.007 | 0.026 | 0.038 | 0.059 |
| | | 5400 | 0.13 | 0.18 | 0.24 | 0.30 | 0.38 | 0.46 | 0.55 | 0.65 | 0.74 | 0.85 | 0.007 | 0.027 | 0.039 | 0.060 |
| | | 5500 | 0.13 | 0.19 | 0.24 | 0.31 | 0.38 | 0.47 | 0.56 | 0.65 | 0.75 | 0.86 | 0.007 | 0.027 | 0.039 | 0.061 |
| | | 5600 | 0.13 | 0.19 | 0.25 | 0.31 | 0.39 | 0.47 | 0.56 | 0.66 | 0.76 | 0.87 | 0.007 | 0.028 | 0.040 | 0.062 |
| | | 5700 | 0.14 | 0.19 | 0.25 | 0.32 | 0.39 | 0.48 | 0.57 | 0.67 | 0.77 | 0.88 | 0.008 | 0.028 | 0.041 | 0.063 |
| | | 5800 | 0.14 | 0.19 | 0.25 | 0.32 | 0.40 | 0.49 | 0.58 | 0.68 | 0.78 | 0.89 | 0.008 | 0.029 | 0.042 | 0.064 |
| | | 5900 | 0.14 | 0.20 | 0.26 | 0.33 | 0.40 | 0.49 | 0.59 | 0.69 | 0.79 | 0.90 | 0.008 | 0.029 | 0.042 | 0.065 |
| | | 6000 | 0.14 | 0.20 | 0.26 | 0.33 | 0.41 | 0.50 | 0.60 | 0.70 | 0.80 | 0.91 | 0.008 | 0.030 | 0.043 | 0.067 |
| | | | | | | | | 10 | | | 15 | | v (m/s) | | | |
| | | | Statically balanced | | | | | | | | | | Pulleys | | | |

# Power Ratings

## Section 8

## Nominal Power Rating $P_N$ (kW) for $\beta$ = 180° and $L_d$ = 579 mm

*Table 46*

| Pulleys | v (m/s) | $n_k$ (min$^{-1}$) | Datum diameter of small pulley $d_{dk}$ (mm) 35 | 40 | 45 | 50 | 56 | 63 | 71 | 80 | 90 | Additional power (kW) per belt for speed ratio i 1,01 to 1,05 | 1,06 to 1,26 | 1,27 to 1,57 | >1,57 |
|---|---|---|---|---|---|---|---|---|---|---|---|---|---|---|---|
| Statically balanced | | **700** | 0.12 | 0.15 | 0.18 | 0.21 | 0.25 | 0.29 | 0.34 | 0.39 | 0.45 | 0.00 | 0.01 | 0.01 | 0.01 |
| | | **950** | 0.15 | 0.19 | 0.23 | 0.27 | 0.32 | 0.37 | 0.43 | 0.50 | 0.57 | 0.00 | 0.01 | 0.02 | 0.02 |
| | | **1450** | 0.19 | 0.25 | 0.31 | 0.37 | 0.43 | 0.51 | 0.59 | 0.69 | 0.79 | 0.00 | 0.02 | 0.03 | 0.03 |
| | | **2850** | 0.28 | 0.38 | 0.48 | 0.57 | 0.69 | 0.81 | 0.95 | 1.11 | 1.27 | 0.01 | 0.03 | 0.05 | 0.06 |
| | | 100 | 0.03 | 0.03 | 0.04 | 0.04 | 0.05 | 0.06 | 0.07 | 0.08 | 0.09 | 0.00 | 0.00 | 0.00 | 0.00 |
| | | 200 | 0.05 | 0.06 | 0.07 | 0.08 | 0.09 | 0.11 | 0.12 | 0.14 | 0.16 | 0.00 | 0.00 | 0.00 | 0.00 |
| | | 300 | 0.06 | 0.08 | 0.09 | 0.11 | 0.13 | 0.15 | 0.17 | 0.20 | 0.23 | 0.00 | 0.00 | 0.01 | 0.01 |
| | | 400 | 0.08 | 0.10 | 0.12 | 0.14 | 0.16 | 0.19 | 0.22 | 0.25 | 0.28 | 0.00 | 0.00 | 0.01 | 0.01 |
| | | 500 | 0.09 | 0.12 | 0.14 | 0.16 | 0.19 | 0.22 | 0.26 | 0.30 | 0.34 | 0.00 | 0.01 | 0.01 | 0.01 |
| | | 600 | 0.11 | 0.13 | 0.16 | 0.19 | 0.22 | 0.26 | 0.30 | 0.35 | 0.40 | 0.00 | 0.01 | 0.01 | 0.01 |
| | | 700 | 0.12 | 0.15 | 0.18 | 0.21 | 0.25 | 0.29 | 0.34 | 0.39 | 0.45 | 0.00 | 0.01 | 0.01 | 0.01 |
| | | 800 | 0.13 | 0.17 | 0.20 | 0.24 | 0.28 | 0.32 | 0.38 | 0.43 | 0.50 | 0.00 | 0.01 | 0.01 | 0.02 |
| | | 900 | 0.14 | 0.18 | 0.22 | 0.26 | 0.30 | 0.35 | 0.41 | 0.48 | 0.55 | 0.00 | 0.01 | 0.02 | 0.02 |
| | 2 | 1000 | 0.15 | 0.19 | 0.24 | 0.28 | 0.33 | 0.38 | 0.45 | 0.52 | 0.59 | 0.00 | 0.01 | 0.02 | 0.02 |
| | | 1100 | 0.16 | 0.21 | 0.25 | 0.30 | 0.35 | 0.41 | 0.48 | 0.56 | 0.64 | 0.00 | 0.01 | 0.02 | 0.02 |
| | | 1200 | 0.17 | 0.22 | 0.27 | 0.32 | 0.38 | 0.44 | 0.51 | 0.59 | 0.68 | 0.00 | 0.01 | 0.02 | 0.02 |
| | | 1300 | 0.18 | 0.23 | 0.29 | 0.34 | 0.40 | 0.47 | 0.55 | 0.63 | 0.72 | 0.00 | 0.02 | 0.02 | 0.03 |
| | | 1400 | 0.19 | 0.24 | 0.30 | 0.36 | 0.42 | 0.49 | 0.58 | 0.67 | 0.77 | 0.00 | 0.02 | 0.03 | 0.03 |
| | | 1500 | 0.20 | 0.26 | 0.32 | 0.37 | 0.44 | 0.52 | 0.61 | 0.70 | 0.81 | 0.00 | 0.02 | 0.03 | 0.03 |
| | | 1600 | 0.20 | 0.27 | 0.33 | 0.39 | 0.46 | 0.55 | 0.64 | 0.74 | 0.85 | 0.00 | 0.02 | 0.03 | 0.03 |
| | | 1700 | 0.21 | 0.28 | 0.34 | 0.41 | 0.48 | 0.57 | 0.67 | 0.77 | 0.88 | 0.00 | 0.02 | 0.03 | 0.04 |
| | | 1800 | 0.22 | 0.29 | 0.36 | 0.42 | 0.50 | 0.59 | 0.69 | 0.80 | 0.92 | 0.00 | 0.02 | 0.03 | 0.04 |
| | | 1900 | 0.22 | 0.30 | 0.37 | 0.44 | 0.52 | 0.62 | 0.72 | 0.84 | 0.96 | 0.00 | 0.02 | 0.04 | 0.04 |
| | | 2000 | 0.23 | 0.31 | 0.38 | 0.46 | 0.54 | 0.64 | 0.75 | 0.87 | 0.99 | 0.00 | 0.02 | 0.04 | 0.04 |
| | | 2100 | 0.24 | 0.32 | 0.40 | 0.47 | 0.56 | 0.66 | 0.77 | 0.90 | 1.03 | 0.00 | 0.02 | 0.04 | 0.04 |
| | | 2200 | 0.24 | 0.33 | 0.41 | 0.49 | 0.58 | 0.68 | 0.80 | 0.93 | 1.06 | 0.01 | 0.03 | 0.04 | 0.05 |
| | | 2300 | 0.25 | 0.34 | 0.42 | 0.50 | 0.60 | 0.70 | 0.83 | 0.96 | 1.10 | 0.01 | 0.03 | 0.04 | 0.05 |
| | | 2400 | 0.25 | 0.34 | 0.43 | 0.51 | 0.61 | 0.73 | 0.85 | 0.98 | 1.13 | 0.01 | 0.03 | 0.04 | 0.05 |
| | | 2500 | 0.26 | 0.35 | 0.44 | 0.53 | 0.63 | 0.75 | 0.87 | 1.01 | 1.16 | 0.01 | 0.03 | 0.05 | 0.05 |
| | | 2600 | 0.27 | 0.36 | 0.45 | 0.54 | 0.65 | 0.77 | 0.90 | 1.04 | 1.19 | 0.01 | 0.03 | 0.05 | 0.05 |
| | 5 | 2700 | 0.27 | 0.37 | 0.46 | 0.56 | 0.66 | 0.79 | 0.92 | 1.07 | 1.22 | 0.01 | 0.03 | 0.05 | 0.06 |
| | | 2800 | 0.27 | 0.38 | 0.47 | 0.57 | 0.68 | 0.80 | 0.94 | 1.09 | 1.25 | 0.01 | 0.03 | 0.05 | 0.06 |
| | | 2900 | 0.28 | 0.38 | 0.48 | 0.58 | 0.69 | 0.82 | 0.96 | 1.12 | 1.28 | 0.01 | 0.03 | 0.05 | 0.06 |
| | | 3000 | 0.28 | 0.39 | 0.49 | 0.59 | 0.71 | 0.84 | 0.99 | 1.14 | 1.31 | 0.01 | 0.03 | 0.06 | 0.06 |
| | | 3100 | 0.29 | 0.40 | 0.50 | 0.60 | 0.72 | 0.86 | 1.01 | 1.17 | 1.34 | 0.01 | 0.04 | 0.06 | 0.06 |
| | | 3200 | 0.29 | 0.40 | 0.51 | 0.62 | 0.74 | 0.88 | 1.03 | 1.19 | 1.36 | 0.01 | 0.04 | 0.06 | 0.07 |
| | | 3300 | 0.30 | 0.41 | 0.52 | 0.63 | 0.75 | 0.89 | 1.05 | 1.21 | 1.39 | 0.01 | 0.04 | 0.06 | 0.07 |
| | | 3400 | 0.30 | 0.42 | 0.53 | 0.64 | 0.77 | 0.91 | 1.07 | 1.24 | 1.41 | 0.01 | 0.04 | 0.06 | 0.07 |
| | | 3500 | 0.30 | 0.42 | 0.54 | 0.65 | 0.78 | 0.93 | 1.09 | 1.26 | 1.44 | 0.01 | 0.04 | 0.06 | 0.07 |
| | | 3600 | 0.31 | 0.43 | 0.55 | 0.66 | 0.79 | 0.94 | 1.10 | 1.28 | 1.46 | 0.01 | 0.04 | 0.07 | 0.07 |
| | | 3700 | 0.31 | 0.43 | 0.55 | 0.67 | 0.81 | 0.96 | 1.12 | 1.30 | 1.49 | 0.01 | 0.04 | 0.07 | 0.08 |
| | | 3800 | 0.31 | 0.44 | 0.56 | 0.68 | 0.82 | 0.97 | 1.14 | 1.32 | 1.51 | 0.01 | 0.04 | 0.07 | 0.08 |
| | | 3900 | 0.31 | 0.44 | 0.57 | 0.69 | 0.83 | 0.99 | 1.16 | 1.34 | 1.53 | 0.01 | 0.05 | 0.07 | 0.08 |
| | | 4000 | 0.32 | 0.45 | 0.58 | 0.70 | 0.84 | 1.00 | 1.17 | 1.36 | 1.55 | 0.01 | 0.05 | 0.07 | 0.08 |
| | | 4100 | 0.32 | 0.45 | 0.58 | 0.71 | 0.85 | 1.02 | 1.19 | 1.38 | 1.57 | 0.01 | 0.05 | 0.08 | 0.09 |
| | | 4200 | 0.32 | 0.46 | 0.59 | 0.72 | 0.86 | 1.03 | 1.21 | 1.40 | 1.59 | 0.01 | 0.05 | 0.08 | 0.09 |
| | | 4300 | 0.32 | 0.46 | 0.60 | 0.73 | 0.88 | 1.04 | 1.22 | 1.41 | 1.61 | 0.01 | 0.05 | 0.08 | 0.09 |
| | | 4400 | 0.33 | 0.47 | 0.60 | 0.73 | 0.89 | 1.06 | 1.24 | 1.43 | 1.63 | 0.01 | 0.05 | 0.08 | 0.09 |
| | | 4500 | 0.33 | 0.47 | 0.61 | 0.74 | 0.90 | 1.07 | 1.25 | 1.45 | 1.65 | 0.01 | 0.05 | 0.08 | 0.09 |
| | | 4600 | 0.33 | 0.48 | 0.62 | 0.75 | 0.91 | 1.08 | 1.27 | 1.46 | 1.66 | 0.01 | 0.05 | 0.09 | 0.10 |
| | | 4700 | 0.33 | 0.48 | 0.62 | 0.76 | 0.92 | 1.09 | 1.28 | 1.48 | 1.68 | 0.01 | 0.05 | 0.09 | 0.10 |
| | | 4800 | 0.33 | 0.48 | 0.63 | 0.77 | 0.93 | 1.10 | 1.29 | 1.49 | 1.69 | 0.01 | 0.06 | 0.09 | 0.10 |
| | | 4900 | 0.33 | 0.49 | 0.63 | 0.77 | 0.94 | 1.11 | 1.31 | 1.51 | 1.71 | 0.01 | 0.06 | 0.09 | 0.10 |
| | | 5000 | 0.34 | 0.49 | 0.64 | 0.78 | 0.94 | 1.13 | 1.32 | 1.52 | 1.72 | 0.01 | 0.06 | 0.09 | 0.10 |
| | | 5100 | 0.34 | 0.49 | 0.64 | 0.79 | 0.95 | 1.14 | 1.33 | 1.53 | 1.74 | 0.01 | 0.06 | 0.09 | 0.11 |
| | | 5200 | 0.34 | 0.50 | 0.65 | 0.79 | 0.96 | 1.15 | 1.34 | 1.55 | 1.75 | 0.01 | 0.06 | 0.10 | 0.11 |
| | | 5300 | 0.34 | 0.50 | 0.65 | 0.80 | 0.97 | 1.16 | 1.35 | 1.56 | 1.76 | 0.01 | 0.06 | 0.10 | 0.11 |
| | 10 | 5400 | 0.34 | 0.50 | 0.66 | 0.81 | 0.98 | 1.17 | 1.36 | 1.57 | 1.77 | 0.01 | 0.06 | 0.10 | 0.11 |
| | | 5500 | 0.34 | 0.51 | 0.66 | 0.81 | 0.99 | 1.17 | 1.38 | 1.58 | 1.78 | 0.01 | 0.06 | 0.10 | 0.11 |
| | | 5600 | 0.34 | 0.51 | 0.67 | 0.82 | 0.99 | 1.18 | 1.38 | 1.59 | 1.79 | 0.01 | 0.06 | 0.10 | 0.12 |
| | | 5700 | 0.34 | 0.51 | 0.67 | 0.83 | 1.00 | 1.19 | 1.39 | 1.60 | 1.80 | 0.01 | 0.07 | 0.11 | 0.12 |
| | | 5800 | 0.34 | 0.51 | 0.68 | 0.83 | 1.01 | 1.20 | 1.40 | 1.61 | 1.81 | 0.01 | 0.07 | 0.11 | 0.12 |
| | | 5900 | 0.34 | 0.51 | 0.68 | 0.84 | 1.01 | 1.21 | 1.41 | 1.62 | 1.82 | 0.01 | 0.07 | 0.11 | 0.12 |
| | | 6000 | 0.34 | 0.52 | 0.68 | 0.84 | 1.02 | 1.22 | 1.42 | 1.63 | 1.82 | 0.01 | 0.07 | 0.11 | 0.12 |
| | | 6200 | 0.34 | 0.52 | 0.69 | 0.85 | 1.03 | 1.23 | 1.43 | 1.64 | 1.83 | 0.01 | 0.07 | 0.11 | 0.13 |
| | | 6400 | 0.34 | 0.52 | 0.69 | 0.86 | 1.04 | 1.24 | 1.45 | 1.65 | 1.84 | 0.01 | 0.07 | 0.12 | 0.13 |
| | | 6600 | 0.34 | 0.52 | 0.70 | 0.87 | 1.05 | 1.25 | 1.46 | 1.66 | 1.84 | 0.02 | 0.08 | 0.12 | 0.14 |
| | | 6800 | 0.34 | 0.53 | 0.70 | 0.87 | 1.06 | 1.26 | 1.47 | 1.67 | 1.84 | 0.02 | 0.08 | 0.13 | 0.14 |
| | | 7000 | 0.34 | 0.53 | 0.71 | 0.88 | 1.07 | 1.27 | 1.48 | 1.67 | 1.84 | 0.02 | 0.08 | 0.13 | 0.15 |
| | | 7200 | 0.33 | 0.53 | 0.71 | 0.88 | 1.07 | 1.28 | 1.48 | 1.67 | 1.84 | 0.02 | 0.08 | 0.13 | 0.15 |
| | | 7400 | 0.33 | 0.53 | 0.71 | 0.89 | 1.08 | 1.28 | 1.48 | 1.67 | 1.83 | 0.02 | 0.09 | 0.14 | 0.15 |
| | | 7600 | 0.33 | 0.53 | 0.72 | 0.89 | 1.08 | 1.29 | 1.49 | 1.67 | 1.81 | 0.02 | 0.09 | 0.14 | 0.16 |
| | | 7800 | 0.32 | 0.53 | 0.72 | 0.89 | 1.09 | 1.29 | 1.49 | 1.66 | 1.80 | 0.02 | 0.09 | 0.14 | 0.16 |
| | | 8000 | 0.32 | 0.52 | 0.72 | 0.89 | 1.09 | 1.29 | 1.48 | 1.65 | 1.78 | 0.02 | 0.09 | 0.15 | 0.17 |
| | | | 15 | | 20 | | 25 | | 30 | | | v (m/s) | | | |
| | | | | | | | | | Dynamically balanced | | | Pulleys | | | |

Where v > 30 m/s, please consult our Applications Engineering Department

# Power Ratings

## Section Z/10

## Nominal Power Rating $P_N$ (kW) for $\beta$ = 180° and $L_d$ = 822 mm

*Table 47*

| Pulleys | v (m/s) | $n_k$ (min$^{-1}$) | Datum diameter of small pulley $d_{dk}$ (mm) 45 | 50 | 56 | 63 | 71 | 80 | 90 | 100 | 112 | Additional power (kW) per belt for speed ratio i 1,01 to 1,05 | 1,06 to 1,26 | 1,27 to 1,57 | >1,57 |
|---|---|---|---|---|---|---|---|---|---|---|---|---|---|---|---|
| Statically balanced | | **700** | 0.18 | 0.22 | 0.28 | 0.34 | 0.42 | 0.50 | 0.59 | 0.67 | 0.77 | 0.00 | 0.02 | 0.03 | 0.03 |
| | | **950** | 0.22 | 0.28 | 0.35 | 0.44 | 0.53 | 0.64 | 0.75 | 0.86 | 1.00 | 0.00 | 0.02 | 0.04 | 0.04 |
| | | **1450** | 0.29 | 0.38 | 0.48 | 0.60 | 0.74 | 0.89 | 1.06 | 1.22 | 1.40 | 0.01 | 0.03 | 0.06 | 0.06 |
| | | **2850** | 0.42 | 0.58 | 0.77 | 0.98 | 1.22 | 1.47 | 1.75 | 2.02 | 2.33 | 0.01 | 0.07 | 0.11 | 0.12 |
| | | 100 | 0.04 | 0.05 | 0.06 | 0.07 | 0.08 | 0.10 | 0.11 | 0.13 | 0.15 | 0.00 | 0.00 | 0.00 | 0.00 |
| | | 200 | 0.07 | 0.08 | 0.10 | 0.12 | 0.15 | 0.17 | 0.20 | 0.23 | 0.27 | 0.00 | 0.00 | 0.01 | 0.01 |
| | | 300 | 0.09 | 0.12 | 0.14 | 0.17 | 0.21 | 0.25 | 0.29 | 0.33 | 0.38 | 0.00 | 0.01 | 0.01 | 0.01 |
| | | 400 | 0.12 | 0.15 | 0.18 | 0.22 | 0.26 | 0.31 | 0.37 | 0.42 | 0.48 | 0.00 | 0.01 | 0.02 | 0.02 |
| | | 500 | 0.14 | 0.17 | 0.21 | 0.26 | 0.32 | 0.38 | 0.44 | 0.51 | 0.58 | 0.00 | 0.01 | 0.02 | 0.02 |
| | | 600 | 0.16 | 0.20 | 0.25 | 0.30 | 0.37 | 0.44 | 0.51 | 0.59 | 0.68 | 0.00 | 0.01 | 0.02 | 0.03 |
| | | 700 | 0.18 | 0.22 | 0.28 | 0.34 | 0.42 | 0.50 | 0.59 | 0.67 | 0.77 | 0.00 | 0.02 | 0.03 | 0.03 |
| | 2 | 800 | 0.19 | 0.25 | 0.31 | 0.38 | 0.46 | 0.55 | 0.65 | 0.75 | 0.87 | 0.00 | 0.02 | 0.03 | 0.03 |
| | | 900 | 0.21 | 0.27 | 0.34 | 0.42 | 0.51 | 0.61 | 0.72 | 0.83 | 0.95 | 0.00 | 0.02 | 0.03 | 0.04 |
| | | 1000 | 0.23 | 0.29 | 0.37 | 0.45 | 0.55 | 0.66 | 0.78 | 0.90 | 1.04 | 0.00 | 0.02 | 0.04 | 0.04 |
| | | 1100 | 0.24 | 0.31 | 0.39 | 0.49 | 0.60 | 0.72 | 0.85 | 0.97 | 1.12 | 0.01 | 0.03 | 0.04 | 0.05 |
| | | 1200 | 0.25 | 0.33 | 0.42 | 0.52 | 0.64 | 0.77 | 0.91 | 1.05 | 1.21 | 0.01 | 0.03 | 0.05 | 0.05 |
| | | 1300 | 0.27 | 0.35 | 0.45 | 0.56 | 0.68 | 0.82 | 0.97 | 1.11 | 1.29 | 0.01 | 0.03 | 0.05 | 0.06 |
| | | 1400 | 0.28 | 0.37 | 0.47 | 0.59 | 0.72 | 0.87 | 1.03 | 1.18 | 1.37 | 0.01 | 0.03 | 0.05 | 0.06 |
| | | 1500 | 0.29 | 0.39 | 0.49 | 0.62 | 0.76 | 0.91 | 1.08 | 1.25 | 1.44 | 0.01 | 0.04 | 0.06 | 0.06 |
| | | 1600 | 0.31 | 0.40 | 0.52 | 0.65 | 0.80 | 0.96 | 1.14 | 1.31 | 1.52 | 0.01 | 0.04 | 0.06 | 0.07 |
| | | 1700 | 0.32 | 0.42 | 0.54 | 0.68 | 0.84 | 1.01 | 1.19 | 1.38 | 1.59 | 0.01 | 0.04 | 0.07 | 0.07 |
| | | 1800 | 0.33 | 0.44 | 0.56 | 0.71 | 0.87 | 1.05 | 1.25 | 1.44 | 1.66 | 0.01 | 0.04 | 0.07 | 0.08 |
| | | 1900 | 0.34 | 0.45 | 0.59 | 0.74 | 0.91 | 1.10 | 1.30 | 1.50 | 1.73 | 0.01 | 0.05 | 0.07 | 0.08 |
| | | 2000 | 0.35 | 0.47 | 0.61 | 0.77 | 0.94 | 1.14 | 1.35 | 1.56 | 1.80 | 0.01 | 0.05 | 0.08 | 0.09 |
| | 5 | 2100 | 0.36 | 0.48 | 0.63 | 0.79 | 0.98 | 1.18 | 1.40 | 1.62 | 1.87 | 0.01 | 0.05 | 0.08 | 0.09 |
| | | 2200 | 0.37 | 0.50 | 0.65 | 0.82 | 1.01 | 1.22 | 1.45 | 1.68 | 1.94 | 0.01 | 0.05 | 0.08 | 0.10 |
| | | 2300 | 0.38 | 0.51 | 0.67 | 0.85 | 1.05 | 1.26 | 1.50 | 1.73 | 2.00 | 0.01 | 0.06 | 0.09 | 0.10 |
| | | 2400 | 0.39 | 0.52 | 0.69 | 0.87 | 1.08 | 1.30 | 1.55 | 1.79 | 2.06 | 0.01 | 0.06 | 0.09 | 0.10 |
| | | 2500 | 0.39 | 0.54 | 0.70 | 0.90 | 1.11 | 1.34 | 1.60 | 1.84 | 2.12 | 0.01 | 0.06 | 0.10 | 0.11 |
| | | 2600 | 0.40 | 0.55 | 0.72 | 0.92 | 1.14 | 1.38 | 1.64 | 1.89 | 2.18 | 0.01 | 0.06 | 0.10 | 0.11 |
| | | 2700 | 0.41 | 0.56 | 0.74 | 0.94 | 1.17 | 1.42 | 1.69 | 1.94 | 2.24 | 0.01 | 0.06 | 0.10 | 0.12 |
| | | 2800 | 0.42 | 0.57 | 0.76 | 0.97 | 1.20 | 1.46 | 1.73 | 1.99 | 2.30 | 0.01 | 0.07 | 0.11 | 0.12 |
| | | 2900 | 0.42 | 0.59 | 0.77 | 0.99 | 1.23 | 1.49 | 1.77 | 2.04 | 2.35 | 0.01 | 0.07 | 0.11 | 0.13 |
| | | 3000 | 0.43 | 0.60 | 0.79 | 1.01 | 1.26 | 1.53 | 1.81 | 2.09 | 2.41 | 0.01 | 0.07 | 0.12 | 0.13 |
| | | 3100 | 0.44 | 0.61 | 0.81 | 1.03 | 1.29 | 1.56 | 1.85 | 2.14 | 2.46 | 0.01 | 0.07 | 0.12 | 0.13 |
| | | 3200 | 0.44 | 0.62 | 0.82 | 1.06 | 1.31 | 1.59 | 1.89 | 2.18 | 2.51 | 0.02 | 0.08 | 0.12 | 0.14 |
| | | 3300 | 0.45 | 0.63 | 0.84 | 1.08 | 1.34 | 1.63 | 1.93 | 2.22 | 2.56 | 0.02 | 0.08 | 0.13 | 0.14 |
| | | 3400 | 0.46 | 0.64 | 0.85 | 1.10 | 1.37 | 1.66 | 1.97 | 2.27 | 2.60 | 0.02 | 0.08 | 0.13 | 0.15 |
| | | 3500 | 0.46 | 0.65 | 0.87 | 1.12 | 1.39 | 1.69 | 2.01 | 2.31 | 2.65 | 0.02 | 0.08 | 0.13 | 0.15 |
| | | 3600 | 0.47 | 0.66 | 0.88 | 1.14 | 1.42 | 1.72 | 2.04 | 2.35 | 2.69 | 0.02 | 0.09 | 0.14 | 0.16 |
| | | 3700 | 0.47 | 0.67 | 0.90 | 1.15 | 1.44 | 1.75 | 2.08 | 2.39 | 2.74 | 0.02 | 0.09 | 0.14 | 0.16 |
| | | 3800 | 0.48 | 0.68 | 0.91 | 1.17 | 1.46 | 1.78 | 2.11 | 2.42 | 2.78 | 0.02 | 0.09 | 0.15 | 0.16 |
| | | 3900 | 0.48 | 0.68 | 0.92 | 1.19 | 1.49 | 1.81 | 2.14 | 2.46 | 2.81 | 0.02 | 0.09 | 0.15 | 0.17 |
| | | 4000 | 0.48 | 0.69 | 0.93 | 1.21 | 1.51 | 1.83 | 2.17 | 2.49 | 2.85 | 0.02 | 0.10 | 0.15 | 0.17 |
| | | 4100 | 0.49 | 0.70 | 0.95 | 1.22 | 1.53 | 1.86 | 2.20 | 2.53 | 2.89 | 0.02 | 0.10 | 0.16 | 0.18 |
| | 10 | 4200 | 0.49 | 0.71 | 0.96 | 1.24 | 1.55 | 1.89 | 2.23 | 2.56 | 2.92 | 0.02 | 0.10 | 0.16 | 0.18 |
| | | 4300 | 0.49 | 0.71 | 0.97 | 1.26 | 1.57 | 1.91 | 2.26 | 2.59 | 2.95 | 0.02 | 0.10 | 0.17 | 0.19 |
| | | 4400 | 0.50 | 0.72 | 0.98 | 1.27 | 1.59 | 1.93 | 2.29 | 2.62 | 2.98 | 0.02 | 0.11 | 0.17 | 0.19 |
| | | 4500 | 0.50 | 0.73 | 0.99 | 1.29 | 1.61 | 1.96 | 2.32 | 2.65 | 3.01 | 0.02 | 0.11 | 0.17 | 0.19 |
| | | 4600 | 0.50 | 0.73 | 1.00 | 1.30 | 1.63 | 1.98 | 2.34 | 2.67 | 3.04 | 0.02 | 0.11 | 0.18 | 0.20 |
| | | 4700 | 0.50 | 0.74 | 1.01 | 1.32 | 1.65 | 2.00 | 2.37 | 2.70 | 3.06 | 0.02 | 0.11 | 0.18 | 0.20 |
| | | 4800 | 0.51 | 0.74 | 1.02 | 1.33 | 1.67 | 2.02 | 2.39 | 2.72 | 3.08 | 0.02 | 0.12 | 0.18 | 0.21 |
| | | 4900 | 0.51 | 0.75 | 1.03 | 1.34 | 1.68 | 2.04 | 2.41 | 2.75 | 3.10 | 0.02 | 0.12 | 0.19 | 0.21 |
| | | 5000 | 0.51 | 0.75 | 1.04 | 1.35 | 1.70 | 2.06 | 2.43 | 2.77 | 3.12 | 0.02 | 0.12 | 0.19 | 0.22 |
| | | 5100 | 0.51 | 0.76 | 1.05 | 1.37 | 1.71 | 2.08 | 2.45 | 2.79 | 3.14 | 0.02 | 0.12 | 0.20 | 0.22 |
| | | 5200 | 0.51 | 0.76 | 1.05 | 1.38 | 1.73 | 2.10 | 2.47 | 2.80 | 3.15 | 0.03 | 0.13 | 0.20 | 0.23 |
| | | 5300 | 0.51 | 0.77 | 1.06 | 1.39 | 1.74 | 2.11 | 2.49 | 2.82 | 3.16 | 0.03 | 0.13 | 0.20 | 0.23 |
| | | 5400 | 0.51 | 0.77 | 1.07 | 1.40 | 1.76 | 2.13 | 2.50 | 2.83 | 3.17 | 0.03 | 0.13 | 0.21 | 0.23 |
| | | 5500 | 0.51 | 0.77 | 1.08 | 1.41 | 1.77 | 2.14 | 2.52 | 2.85 | 3.18 | 0.03 | 0.13 | 0.21 | 0.24 |
| | | 5600 | 0.51 | 0.78 | 1.08 | 1.42 | 1.78 | 2.16 | 2.53 | 2.86 | 3.19 | 0.03 | 0.13 | 0.22 | 0.24 |
| | | 5800 | 0.51 | 0.78 | 1.09 | 1.44 | 1.80 | 2.18 | 2.56 | 2.88 | 3.19 | 0.03 | 0.14 | 0.22 | 0.25 |
| | | 6000 | 0.51 | 0.79 | 1.10 | 1.45 | 1.82 | 2.20 | 2.57 | 2.89 | 3.19 | 0.03 | 0.14 | 0.23 | 0.26 |
| | 15 | 6200 | 0.51 | 0.79 | 1.11 | 1.47 | 1.84 | 2.22 | 2.59 | 2.90 | 3.18 | 0.03 | 0.15 | 0.24 | 0.27 |
| | | 6400 | 0.50 | 0.79 | 1.12 | 1.48 | 1.85 | 2.23 | 2.60 | 2.89 | 3.15 | 0.03 | 0.15 | 0.25 | 0.28 |
| | | 6600 | 0.50 | 0.79 | 1.12 | 1.49 | 1.86 | 2.24 | 2.60 | 2.88 | 3.12 | 0.03 | 0.16 | 0.25 | 0.29 |
| | | 6800 | 0.49 | 0.79 | 1.13 | 1.49 | 1.87 | 2.25 | 2.60 | 2.87 | 3.08 | 0.03 | 0.16 | 0.26 | 0.29 |
| | | 7000 | 0.49 | 0.79 | 1.13 | 1.50 | 1.88 | 2.25 | 2.59 | 2.85 | 3.03 | 0.03 | 0.17 | 0.27 | 0.30 |
| | | 7200 | 0.48 | 0.78 | 1.13 | 1.50 | 1.88 | 2.25 | 2.58 | 2.82 | 2.97 | 0.03 | 0.17 | 0.28 | 0.31 |
| | | 7400 | 0.47 | 0.78 | 1.13 | 1.50 | 1.88 | 2.24 | 2.56 | 2.78 | 2.90 | 0.04 | 0.18 | 0.28 | 0.32 |
| | | 7600 | 0.46 | 0.77 | 1.12 | 1.50 | 1.88 | 2.23 | 2.53 | | | 0.04 | 0.18 | 0.29 | 0.33 |
| | | 7800 | 0.45 | 0.77 | 1.12 | 1.49 | 1.87 | 2.22 | 2.50 | | | 0.04 | 0.19 | 0.30 | 0.34 |
| | | 8000 | 0.44 | 0.76 | 1.11 | 1.49 | 1.86 | 2.20 | 2.47 | | | 0.04 | 0.19 | 0.31 | 0.35 |
| | | 8200 | 0.42 | 0.75 | 1.11 | 1.48 | 1.85 | 2.17 | | | | 0.04 | 0.20 | 0.32 | 0.35 |
| | | 8400 | 0.41 | 0.74 | 1.10 | 1.47 | 1.83 | 2.15 | | | | 0.04 | 0.20 | 0.32 | 0.36 |
| | | | 20 | | | 25 | 30 | | | | | | | v (m/s) | |
| | | | | | | | Dynamically balanced (for details see DIN 2211) | | | | | | | Pulleys | |

Where v > 30 m/s, please consult our Applications Engineering Department

# Power Ratings

## Section A/13

## Nominal Power Rating $P_N$ (kW) for $\beta$ = 180° and $L_d$ = 1730 mm

*Table 48*

| Pulleys | v (m/s) | $n_k$ (min$^{-1}$) | Datum diameter of small pulley $d_{dk}$ (mm) 71 | 80 | 90 | 95 | 100 | 106 | 112 | 118 | 125 | 132 | 140 | 150 | 160 | 180 | Additional power (kW) per belt for speed ratio i 1,01 to 1,05 | 1,06 to 1,26 | 1,27 to 1,57 | >1,57 |
|---|---|---|---|---|---|---|---|---|---|---|---|---|---|---|---|---|---|---|---|---|
| Statically balanced | | **700** | 0.52 | 0.74 | 0.97 | 1.09 | 1.21 | 1.35 | 1.48 | 1.62 | 1.78 | 1.94 | 2.12 | 2.34 | 2.56 | 2.99 | 0.02 | 0.08 | 0.12 | 0.14 |
| | | **950** | 0.63 | 0.92 | 1.23 | 1.38 | 1.53 | 1.71 | 1.89 | 2.07 | 2.28 | 2.49 | 2.72 | 3.01 | 3.29 | 3.85 | 0.02 | 0.10 | 0.16 | 0.18 |
| | | **1450** | 0.81 | 1.22 | 1.67 | 1.89 | 2.11 | 2.37 | 2.62 | 2.88 | 3.17 | 3.46 | 3.79 | 4.19 | 4.59 | 5.36 | 0.03 | 0.16 | 0.25 | 0.28 |
| | | **2850** | 1.04 | 1.75 | 2.51 | 2.88 | 3.25 | 3.67 | 4.09 | 4.50 | 4.96 | 5.41 | 5.90 | 6.48 | 7.03 | 8.03 | 0.06 | 0.31 | 0.49 | 0.55 |
| | | 100 | 0.12 | 0.16 | 0.20 | 0.22 | 0.24 | 0.26 | 0.29 | 0.31 | 0.34 | 0.37 | 0.40 | 0.44 | 0.48 | 0.55 | 0.00 | 0.01 | 0.02 | 0.02 |
| | | 200 | 0.21 | 0.28 | 0.36 | 0.39 | 0.43 | 0.48 | 0.52 | 0.57 | 0.62 | 0.67 | 0.73 | 0.80 | 0.87 | 1.02 | 0.00 | 0.02 | 0.03 | 0.04 |
| | | 300 | 0.29 | 0.39 | 0.50 | 0.55 | 0.61 | 0.67 | 0.74 | 0.80 | 0.88 | 0.95 | 1.03 | 1.14 | 1.24 | 1.45 | 0.01 | 0.03 | 0.05 | 0.06 |
| | | 400 | 0.35 | 0.48 | 0.63 | 0.70 | 0.77 | 0.85 | 0.94 | 1.02 | 1.12 | 1.21 | 1.32 | 1.46 | 1.59 | 1.86 | 0.01 | 0.04 | 0.07 | 0.08 |
| | 2 | 500 | 0.41 | 0.57 | 0.75 | 0.84 | 0.92 | 1.02 | 1.13 | 1.23 | 1.35 | 1.46 | 1.60 | 1.76 | 1.93 | 2.25 | 0.01 | 0.05 | 0.09 | 0.10 |
| | | 600 | 0.47 | 0.66 | 0.86 | 0.97 | 1.07 | 1.19 | 1.31 | 1.43 | 1.57 | 1.71 | 1.86 | 2.06 | 2.25 | 2.63 | 0.01 | 0.06 | 0.10 | 0.12 |
| | | 700 | 0.52 | 0.74 | 0.97 | 1.09 | 1.21 | 1.35 | 1.48 | 1.62 | 1.78 | 1.94 | 2.12 | 2.34 | 2.56 | 2.99 | 0.02 | 0.08 | 0.12 | 0.14 |
| | | 800 | 0.57 | 0.81 | 1.08 | 1.21 | 1.34 | 1.50 | 1.65 | 1.81 | 1.99 | 2.16 | 2.36 | 2.61 | 2.86 | 3.34 | 0.02 | 0.09 | 0.14 | 0.16 |
| | | 900 | 0.61 | 0.88 | 1.18 | 1.32 | 1.47 | 1.64 | 1.82 | 1.99 | 2.18 | 2.38 | 2.60 | 2.88 | 3.15 | 3.69 | 0.02 | 0.10 | 0.16 | 0.18 |
| | | 1000 | 0.65 | 0.95 | 1.27 | 1.44 | 1.59 | 1.78 | 1.97 | 2.16 | 2.38 | 2.59 | 2.83 | 3.13 | 3.43 | 4.01 | 0.02 | 0.11 | 0.17 | 0.19 |
| | | 1100 | 0.69 | 1.01 | 1.37 | 1.54 | 1.71 | 1.92 | 2.13 | 2.33 | 2.56 | 2.79 | 3.06 | 3.38 | 3.70 | 4.33 | 0.02 | 0.12 | 0.19 | 0.21 |
| | | 1200 | 0.73 | 1.08 | 1.46 | 1.64 | 1.83 | 2.05 | 2.27 | 2.49 | 2.74 | 2.99 | 3.28 | 3.62 | 3.97 | 4.64 | 0.03 | 0.13 | 0.21 | 0.23 |
| | 5 | 1300 | 0.76 | 1.14 | 1.54 | 1.74 | 1.94 | 2.18 | 2.42 | 2.65 | 2.92 | 3.19 | 3.49 | 3.86 | 4.22 | 4.94 | 0.03 | 0.14 | 0.22 | 0.25 |
| | | 1400 | 0.79 | 1.19 | 1.63 | 1.84 | 2.05 | 2.30 | 2.55 | 2.80 | 3.09 | 3.37 | 3.69 | 4.08 | 4.47 | 5.22 | 0.03 | 0.15 | 0.24 | 0.27 |
| | | 1500 | 0.82 | 1.24 | 1.71 | 1.93 | 2.16 | 2.42 | 2.69 | 2.95 | 3.25 | 3.55 | 3.89 | 4.30 | 4.71 | 5.50 | 0.03 | 0.16 | 0.26 | 0.29 |
| | | 1600 | 0.85 | 1.30 | 1.78 | 2.02 | 2.26 | 2.54 | 2.82 | 3.10 | 3.41 | 3.73 | 4.08 | 4.51 | 4.94 | 5.76 | 0.03 | 0.17 | 0.28 | 0.31 |
| | | 1700 | 0.88 | 1.34 | 1.86 | 2.11 | 2.36 | 2.65 | 2.95 | 3.23 | 3.57 | 3.90 | 4.26 | 4.72 | 5.16 | 6.02 | 0.04 | 0.18 | 0.29 | 0.33 |
| | | 1800 | 0.90 | 1.39 | 1.93 | 2.19 | 2.45 | 2.76 | 3.07 | 3.37 | 3.72 | 4.06 | 4.44 | 4.91 | 5.37 | 6.26 | 0.04 | 0.19 | 0.31 | 0.35 |
| | | 1900 | 0.92 | 1.44 | 2.00 | 2.27 | 2.54 | 2.87 | 3.19 | 3.50 | 3.86 | 4.22 | 4.62 | 5.10 | 5.58 | 6.49 | 0.04 | 0.21 | 0.33 | 0.37 |
| | | 2000 | 0.94 | 1.48 | 2.06 | 2.35 | 2.63 | 2.97 | 3.30 | 3.62 | 4.00 | 4.37 | 4.78 | 5.28 | 5.77 | 6.71 | 0.04 | 0.22 | 0.35 | 0.39 |
| | | 2100 | 0.96 | 1.52 | 2.12 | 2.42 | 2.72 | 3.06 | 3.41 | 3.75 | 4.13 | 4.51 | 4.94 | 5.46 | 5.96 | 6.91 | 0.05 | 0.23 | 0.36 | 0.41 |
| | | 2200 | 0.97 | 1.55 | 2.18 | 2.49 | 2.80 | 3.16 | 3.51 | 3.86 | 4.26 | 4.65 | 5.09 | 5.62 | 6.13 | 7.10 | 0.05 | 0.24 | 0.38 | 0.43 |
| | | 2300 | 0.99 | 1.59 | 2.24 | 2.56 | 2.88 | 3.25 | 3.61 | 3.97 | 4.38 | 4.79 | 5.23 | 5.78 | 6.30 | 7.28 | 0.05 | 0.25 | 0.40 | 0.45 |
| | | 2400 | 1.00 | 1.62 | 2.30 | 2.63 | 2.95 | 3.33 | 3.71 | 4.08 | 4.50 | 4.91 | 5.37 | 5.93 | 6.46 | 7.45 | 0.05 | 0.26 | 0.42 | 0.47 |
| | | 2500 | 1.01 | 1.66 | 2.35 | 2.69 | 3.02 | 3.42 | 3.80 | 4.18 | 4.61 | 5.03 | 5.50 | 6.06 | 6.60 | 7.60 | 0.05 | 0.27 | 0.43 | 0.49 |
| | | 2600 | 1.02 | 1.68 | 2.40 | 2.75 | 3.09 | 3.50 | 3.89 | 4.28 | 4.72 | 5.15 | 5.62 | 6.20 | 6.74 | 7.74 | 0.06 | 0.28 | 0.45 | 0.51 |
| | 10 | 2700 | 1.03 | 1.71 | 2.45 | 2.80 | 3.16 | 3.57 | 3.98 | 4.37 | 4.82 | 5.26 | 5.74 | 6.32 | 6.86 | 7.87 | 0.06 | 0.29 | 0.47 | 0.53 |
| | | 2800 | 1.04 | 1.74 | 2.49 | 2.86 | 3.22 | 3.64 | 4.05 | 4.46 | 4.92 | 5.36 | 5.85 | 6.43 | 6.98 | 7.98 | 0.06 | 0.30 | 0.48 | 0.54 |
| | | 2900 | 1.04 | 1.76 | 2.53 | 2.91 | 3.28 | 3.71 | 4.13 | 4.54 | 5.01 | 5.45 | 5.95 | 6.53 | 7.08 | 8.07 | 0.06 | 0.31 | 0.50 | 0.56 |
| | | 3000 | 1.04 | 1.78 | 2.57 | 2.95 | 3.33 | 3.77 | 4.20 | 4.62 | 5.09 | 5.54 | 6.04 | 6.63 | 7.18 | 8.15 | 0.06 | 0.32 | 0.52 | 0.58 |
| | | 3100 | 1.04 | 1.80 | 2.61 | 3.00 | 3.38 | 3.83 | 4.27 | 4.69 | 5.17 | 5.62 | 6.12 | 6.71 | 7.26 | 8.21 | 0.07 | 0.34 | 0.54 | 0.60 |
| | | 3200 | 1.04 | 1.81 | 2.64 | 3.04 | 3.43 | 3.88 | 4.33 | 4.75 | 5.24 | 5.70 | 6.20 | 6.79 | 7.33 | 8.26 | 0.07 | 0.35 | 0.55 | 0.62 |
| | | 3300 | 1.04 | 1.83 | 2.67 | 3.08 | 3.47 | 3.93 | 4.38 | 4.82 | 5.30 | 5.76 | 6.27 | 6.85 | 7.38 | 8.29 | 0.07 | 0.36 | 0.57 | 0.64 |
| | | 3400 | 1.04 | 1.84 | 2.70 | 3.11 | 3.51 | 3.98 | 4.43 | 4.87 | 5.36 | 5.82 | 6.32 | 6.90 | 7.43 | 8.30 | 0.07 | 0.37 | 0.59 | 0.66 |
| | | 3500 | 1.03 | 1.85 | 2.72 | 3.14 | 3.55 | 4.02 | 4.48 | 4.92 | 5.41 | 5.87 | 6.37 | 6.95 | 7.46 | 8.30 | 0.08 | 0.38 | 0.61 | 0.68 |
| | | 3600 | 1.02 | 1.86 | 2.74 | 3.17 | 3.58 | 4.06 | 4.52 | 4.96 | 5.45 | 5.92 | 6.41 | 6.98 | 7.48 | | 0.08 | 0.39 | 0.62 | 0.70 |
| | | 3700 | 1.01 | 1.86 | 2.76 | 3.19 | 3.61 | 4.09 | 4.56 | 5.00 | 5.49 | 5.95 | 6.44 | 7.00 | 7.48 | | 0.08 | 0.40 | 0.64 | 0.72 |
| | | 3800 | 1.00 | 1.87 | 2.78 | 3.21 | 3.64 | 4.12 | 4.59 | 5.03 | 5.52 | 5.98 | 6.47 | 7.01 | 7.47 | | 0.08 | 0.41 | 0.66 | 0.74 |
| | | 3900 | 0.99 | 1.87 | 2.79 | 3.23 | 3.66 | 4.15 | 4.62 | 5.06 | 5.55 | 6.00 | 6.48 | 7.01 | 7.45 | | 0.08 | 0.42 | 0.67 | 0.76 |
| | 15 | 4000 | 0.98 | 1.87 | 2.80 | 3.24 | 3.67 | 4.17 | 4.64 | 5.08 | 5.57 | 6.01 | 6.48 | 6.99 | 7.42 | | 0.09 | 0.43 | 0.69 | 0.78 |
| | | 4100 | 0.96 | 1.86 | 2.81 | 3.25 | 3.69 | 4.18 | 4.65 | 5.09 | 5.58 | 6.02 | 6.47 | 6.97 | 7.37 | | 0.09 | 0.44 | 0.71 | 0.80 |
| | | 4200 | 0.94 | 1.86 | 2.81 | 3.26 | 3.70 | 4.19 | 4.66 | 5.10 | 5.58 | 6.01 | 6.46 | 6.93 | | | 0.09 | 0.45 | 0.73 | 0.82 |
| | | 4300 | 0.92 | 1.85 | 2.81 | 3.26 | 3.70 | 4.20 | 4.66 | 5.10 | 5.57 | 6.00 | 6.43 | 6.88 | | | 0.09 | 0.46 | 0.74 | 0.84 |
| | | 4400 | 0.90 | 1.84 | 2.81 | 3.26 | 3.70 | 4.20 | 4.66 | 5.10 | 5.56 | 5.98 | 6.39 | 6.82 | | | 0.10 | 0.48 | 0.76 | 0.86 |
| | | 4500 | 0.88 | 1.82 | 2.80 | 3.26 | 3.70 | 4.19 | 4.66 | 5.08 | 5.54 | 5.94 | 6.34 | 6.74 | | | 0.10 | 0.49 | 0.78 | 0.88 |
| | | 4600 | 0.85 | 1.81 | 2.79 | 3.25 | 3.69 | 4.18 | 4.64 | 5.07 | 5.51 | 5.90 | | | | | 0.10 | 0.50 | 0.80 | 0.89 |
| | | 4700 | 0.83 | 1.79 | 2.78 | 3.24 | 3.68 | 4.17 | 4.62 | 5.04 | 5.47 | 5.85 | | | | | 0.10 | 0.51 | 0.81 | 0.91 |
| | | 4800 | 0.80 | 1.77 | 2.76 | 3.22 | 3.66 | 4.15 | 4.60 | 5.01 | 5.43 | 5.79 | | | | | 0.10 | 0.52 | 0.83 | 0.93 |
| | | 4900 | 0.77 | 1.75 | 2.74 | 3.20 | 3.64 | 4.12 | 4.57 | 4.97 | 5.38 | 5.72 | | | | | 0.11 | 0.53 | 0.85 | 0.95 |
| | | 5000 | 0.73 | 1.72 | 2.72 | 3.18 | 3.61 | 4.09 | 4.53 | 4.92 | 5.31 | 5.64 | | | | | 0.11 | 0.54 | 0.87 | 0.97 |
| | | 5100 | 0.70 | 1.69 | 2.69 | 3.15 | 3.58 | 4.06 | 4.48 | 4.86 | | | | | | | 0.11 | 0.55 | 0.88 | 0.99 |
| | | 5200 | 0.66 | 1.66 | 2.66 | 3.12 | 3.55 | 4.01 | 4.43 | 4.80 | | | | | | | 0.11 | 0.56 | 0.90 | 1.01 |
| | 20 | 5300 | 0.62 | 1.63 | 2.63 | 3.08 | 3.51 | 3.97 | 4.38 | 4.73 | | | | | | | 0.11 | 0.57 | 0.92 | 1.03 |
| | | 5400 | 0.58 | 1.59 | 2.59 | 3.04 | 3.46 | 3.91 | 4.31 | 4.66 | | | | | | | 0.12 | 0.58 | 0.93 | 1.05 |
| | | 5500 | 0.54 | 1.55 | 2.55 | 3.00 | 3.41 | 3.86 | 4.24 | 4.57 | | | | | | | 0.12 | 0.59 | 0.95 | 1.07 |
| | | 5600 | 0.50 | 1.51 | 2.51 | 2.95 | 3.36 | 3.79 | | | | | | | | | 0.12 | 0.61 | 0.97 | 1.09 |
| | | 5700 | 0.45 | 1.47 | 2.46 | 2.90 | 3.30 | 3.72 | | | | | | | | | 0.12 | 0.62 | 0.99 | 1.11 |
| | | 5800 | 0.40 | 1.42 | 2.41 | 2.84 | 3.23 | 3.64 | | | | | | | | | 0.13 | 0.63 | 1.00 | 1.13 |
| | | 5900 | 0.35 | 1.37 | 2.35 | 2.78 | 3.16 | 3.56 | | | | | | | | | 0.13 | 0.64 | 1.02 | 1.15 |
| | | 6000 | 0.30 | 1.32 | 2.29 | 2.71 | 3.09 | 3.47 | | | | | | | | | 0.13 | 0.65 | 1.04 | 1.17 |
| | | | 25 | | | | 30 | | | | | | | | | | v (m/s) | | | |
| | | | | | | | Dynamically balanced (for details see DIN 2211) | | | | | | | | | | Pulleys | | | |

Where v > 30 m/s, please consult our Applications Engineering Department

# Power Ratings

## Section B/17

## Nominal Power Rating $P_N$ (kW) for $\beta$ = 180° and $L_d$ = 2280 mm

*Table 49*

| Pulleys | v (m/s) | $n_k$ (min$^{-1}$) | Datum diameter of small pulley $d_{dk}$ (mm) 112 | 125 | 132 | 140 | 150 | 160 | 170 | 180 | 190 | 200 | 212 | 224 | 236 | 250 | 280 | Additional power (kW) per belt for speed ratio i 1,01 to 1,05 | 1,06 to 1,26 | 1,27 to 1,57 | >1,57 |
|---|---|---|---|---|---|---|---|---|---|---|---|---|---|---|---|---|---|---|---|---|---|
| Statically balanced | | **700** | 1.49 | 1.96 | 2.21 | 2.50 | 2.85 | 3.20 | 3.55 | 3.89 | 4.24 | 4.58 | 4.98 | 5.38 | 5.78 | 6.23 | 7.19 | 0.03 | 0.17 | 0.27 | 0.30 |
| | | **950** | 1.83 | 2.45 | 2.77 | 3.15 | 3.61 | 4.06 | 4.51 | 4.96 | 5.40 | 5.83 | 6.35 | 6.86 | 7.36 | 7.94 | 9.14 | 0.05 | 0.23 | 0.37 | 0.41 |
| | | **1450** | 2.37 | 3.25 | 3.72 | 4.24 | 4.89 | 5.52 | 6.14 | 6.75 | 7.35 | 7.94 | 8.63 | 9.31 | 9.96 | 10.70 | 12.20 | 0.07 | 0.35 | 0.56 | 0.63 |
| | | **2850** | 2.99 | 4.37 | 5.08 | 5.87 | 6.80 | 7.67 | 8.49 | 9.24 | 9.93 | 10.56 | 11.22 | 11.78 | 12.24 | 12.62 | 12.90 | 0.14 | 0.69 | 1.10 | 1.24 |
| | | 100 | 0.33 | 0.41 | 0.46 | 0.51 | 0.57 | 0.63 | 0.69 | 0.75 | 0.81 | 0.87 | 0.94 | 1.01 | 1.08 | 1.17 | 1.34 | 0.00 | 0.02 | 0.04 | 0.04 |
| | | 200 | 0.58 | 0.73 | 0.81 | 0.91 | 1.02 | 1.14 | 1.25 | 1.37 | 1.48 | 1.59 | 1.73 | 1.86 | 1.99 | 2.15 | 2.47 | 0.01 | 0.05 | 0.08 | 0.09 |
| | | 300 | 0.79 | 1.01 | 1.13 | 1.27 | 1.43 | 1.60 | 1.77 | 1.93 | 2.09 | 2.25 | 2.45 | 2.64 | 2.83 | 3.05 | 3.52 | 0.01 | 0.07 | 0.12 | 0.13 |
| | | 400 | 0.99 | 1.27 | 1.43 | 1.60 | 1.82 | 2.03 | 2.25 | 2.46 | 2.67 | 2.88 | 3.13 | 3.37 | 3.62 | 3.91 | 4.51 | 0.02 | 0.10 | 0.15 | 0.17 |
| | | 500 | 1.17 | 1.52 | 1.70 | 1.92 | 2.18 | 2.44 | 2.70 | 2.96 | 3.22 | 3.47 | 3.77 | 4.07 | 4.37 | 4.72 | 5.45 | 0.02 | 0.12 | 0.19 | 0.22 |
| | | 600 | 1.33 | 1.74 | 1.96 | 2.21 | 2.52 | 2.83 | 3.13 | 3.44 | 3.74 | 4.03 | 4.39 | 4.74 | 5.09 | 5.49 | 6.34 | 0.03 | 0.14 | 0.23 | 0.26 |
| | | 700 | 1.49 | 1.96 | 2.21 | 2.50 | 2.85 | 3.20 | 3.55 | 3.89 | 4.24 | 4.58 | 4.98 | 5.38 | 5.78 | 6.23 | 7.19 | 0.03 | 0.17 | 0.27 | 0.30 |
| | 5 | 800 | 1.63 | 2.16 | 2.44 | 2.77 | 3.16 | 3.56 | 3.95 | 4.33 | 4.72 | 5.09 | 5.55 | 5.99 | 6.43 | 6.94 | 8.00 | 0.04 | 0.19 | 0.31 | 0.35 |
| | | 900 | 1.77 | 2.35 | 2.67 | 3.02 | 3.46 | 3.90 | 4.33 | 4.75 | 5.17 | 5.59 | 6.09 | 6.57 | 7.06 | 7.61 | 8.77 | 0.04 | 0.22 | 0.35 | 0.39 |
| | | 1000 | 1.89 | 2.54 | 2.88 | 3.27 | 3.75 | 4.22 | 4.69 | 5.16 | 5.61 | 6.07 | 6.60 | 7.13 | 7.65 | 8.25 | 9.50 | 0.05 | 0.24 | 0.39 | 0.43 |
| | | 1100 | 2.01 | 2.71 | 3.08 | 3.50 | 4.02 | 4.53 | 5.04 | 5.54 | 6.03 | 6.52 | 7.10 | 7.66 | 8.22 | 8.86 | 10.18 | 0.05 | 0.27 | 0.42 | 0.48 |
| | | 1200 | 2.12 | 2.88 | 3.28 | 3.73 | 4.28 | 4.83 | 5.37 | 5.91 | 6.44 | 6.95 | 7.57 | 8.17 | 8.76 | 9.43 | 10.82 | 0.06 | 0.29 | 0.46 | 0.52 |
| | | 1300 | 2.23 | 3.03 | 3.46 | 3.94 | 4.53 | 5.12 | 5.69 | 6.26 | 6.82 | 7.37 | 8.01 | 8.64 | 9.26 | 9.97 | 11.41 | 0.06 | 0.31 | 0.50 | 0.56 |
| | | 1400 | 2.33 | 3.18 | 3.63 | 4.14 | 4.77 | 5.39 | 6.00 | 6.59 | 7.18 | 7.76 | 8.43 | 9.09 | 9.74 | 10.47 | 11.95 | 0.07 | 0.34 | 0.54 | 0.61 |
| | | 1500 | 2.42 | 3.32 | 3.80 | 4.33 | 5.00 | 5.65 | 6.28 | 6.91 | 7.52 | 8.12 | 8.83 | 9.51 | 10.18 | 10.93 | 12.44 | 0.07 | 0.36 | 0.58 | 0.65 |
| | | 1600 | 2.50 | 3.45 | 3.95 | 4.52 | 5.21 | 5.89 | 6.56 | 7.21 | 7.85 | 8.47 | 9.20 | 9.90 | 10.58 | 11.35 | 12.88 | 0.08 | 0.39 | 0.62 | 0.69 |
| | | 1700 | 2.58 | 3.57 | 4.10 | 4.69 | 5.41 | 6.12 | 6.81 | 7.49 | 8.15 | 8.79 | 9.54 | 10.26 | 10.95 | 11.73 | 13.26 | 0.08 | 0.41 | 0.66 | 0.74 |
| | 10 | 1800 | 2.65 | 3.69 | 4.24 | 4.85 | 5.60 | 6.34 | 7.05 | 7.75 | 8.43 | 9.09 | 9.85 | 10.58 | 11.29 | 12.07 | 13.59 | 0.09 | 0.43 | 0.70 | 0.78 |
| | | 1900 | 2.72 | 3.79 | 4.36 | 5.00 | 5.78 | 6.54 | 7.27 | 7.99 | 8.69 | 9.36 | 10.14 | 10.88 | 11.58 | 12.36 | 13.85 | 0.09 | 0.46 | 0.73 | 0.82 |
| | | 2000 | 2.77 | 3.89 | 4.48 | 5.14 | 5.94 | 6.72 | 7.48 | 8.21 | 8.92 | 9.61 | 10.39 | 11.14 | 11.84 | 12.61 | 14.06 | 0.10 | 0.48 | 0.77 | 0.87 |
| | | 2100 | 2.82 | 3.98 | 4.59 | 5.27 | 6.09 | 6.90 | 7.67 | 8.42 | 9.14 | 9.83 | 10.62 | 11.36 | 12.06 | 12.81 | 14.19 | 0.10 | 0.51 | 0.81 | 0.91 |
| | | 2200 | 2.87 | 4.06 | 4.69 | 5.39 | 6.23 | 7.05 | 7.84 | 8.60 | 9.33 | 10.02 | 10.81 | 11.55 | 12.23 | 12.96 | 14.26 | 0.11 | 0.53 | 0.85 | 0.96 |
| | | 2300 | 2.91 | 4.14 | 4.78 | 5.49 | 6.36 | 7.19 | 7.99 | 8.76 | 9.49 | 10.19 | 10.97 | 11.70 | 12.36 | 13.06 | 14.26 | 0.11 | 0.56 | 0.89 | 1.00 |
| | | 2400 | 2.94 | 4.20 | 4.86 | 5.59 | 6.47 | 7.32 | 8.13 | 8.90 | 9.63 | 10.32 | 11.10 | 11.81 | 12.45 | 13.11 | 14.19 | 0.12 | 0.58 | 0.93 | 1.04 |
| | 15 | 2500 | 2.96 | 4.25 | 4.93 | 5.67 | 6.57 | 7.43 | 8.24 | 9.02 | 9.75 | 10.43 | 11.19 | 11.88 | 12.49 | 13.10 | 14.04 | 0.12 | 0.60 | 0.97 | 1.09 |
| | | 2600 | 2.98 | 4.30 | 4.98 | 5.74 | 6.65 | 7.52 | 8.34 | 9.11 | 9.83 | 10.51 | 11.25 | 11.90 | 12.48 | | | 0.13 | 0.63 | 1.00 | 1.13 |
| | | 2700 | 2.99 | 4.34 | 5.03 | 5.80 | 6.72 | 7.59 | 8.41 | 9.18 | 9.90 | 10.55 | 11.27 | 11.89 | 12.42 | | | 0.13 | 0.65 | 1.04 | 1.17 |
| | | 2800 | 2.99 | 4.36 | 5.07 | 5.85 | 6.77 | 7.65 | 8.47 | 9.23 | 9.93 | 10.57 | 11.25 | 11.83 | 12.31 | | | 0.14 | 0.68 | 1.08 | 1.22 |
| | | 2900 | 2.98 | 4.38 | 5.10 | 5.88 | 6.81 | 7.69 | 8.50 | 9.25 | 9.93 | 10.55 | 11.19 | 11.73 | 12.15 | | | 0.14 | 0.70 | 1.12 | 1.26 |
| | | 3000 | 2.97 | 4.39 | 5.11 | 5.90 | 6.84 | 7.71 | 8.51 | 9.25 | 9.91 | 10.49 | 11.09 | 11.58 | 11.93 | | | 0.14 | 0.72 | 1.16 | 1.30 |
| | | 3100 | 2.95 | 4.39 | 5.12 | 5.91 | 6.84 | 7.71 | 8.50 | 9.22 | 9.85 | 10.41 | | | | | | 0.15 | 0.75 | 1.20 | 1.35 |
| | | 3200 | 2.92 | 4.37 | 5.11 | 5.90 | 6.83 | 7.69 | 8.47 | 9.16 | 9.77 | 10.28 | | | | | | 0.15 | 0.77 | 1.24 | 1.39 |
| | | 3300 | 2.89 | 4.35 | 5.09 | 5.88 | 6.81 | 7.65 | 8.41 | 9.08 | 9.65 | 10.12 | | | | | | 0.16 | 0.80 | 1.27 | 1.43 |
| | 20 | 3400 | 2.85 | 4.32 | 5.06 | 5.85 | 6.77 | 7.59 | 8.33 | 8.96 | 9.50 | 9.92 | | | | | | 0.16 | 0.82 | 1.31 | 1.48 |
| | | 3500 | 2.80 | 4.27 | 5.01 | 5.80 | 6.71 | 7.52 | 8.22 | 8.82 | 9.31 | 9.68 | | | | | | 0.17 | 0.84 | 1.35 | 1.52 |
| | | 3600 | 2.74 | 4.22 | 4.96 | 5.74 | 6.63 | 7.41 | 8.09 | | | | | | | | | 0.17 | 0.87 | 1.39 | 1.56 |
| | | 3700 | 2.67 | 4.15 | 4.89 | 5.66 | 6.53 | 7.29 | 7.93 | | | | | | | | | 0.18 | 0.89 | 1.43 | 1.61 |
| | | 3800 | 2.59 | 4.08 | 4.80 | 5.57 | 6.42 | 7.15 | 7.75 | | | | | | | | | 0.18 | 0.92 | 1.47 | 1.65 |
| | | 3900 | 2.51 | 3.99 | 4.71 | 5.46 | 6.29 | 6.98 | 7.54 | | | | | | | | | 0.19 | 0.94 | 1.51 | 1.69 |
| | | 4000 | 2.42 | 3.89 | 4.60 | 5.34 | 6.13 | 6.79 | 7.31 | | | | | | | | | 0.19 | 0.97 | 1.55 | 1.74 |
| | | 4100 | 2.31 | 3.78 | 4.48 | 5.19 | 5.96 | | | | | | | | | | | 0.20 | 0.99 | 1.58 | 1.78 |
| | 25 | 4200 | 2.20 | 3.65 | 4.34 | 5.04 | 5.77 | | | | | | | | | | | 0.20 | 1.01 | 1.62 | 1.82 |
| | | 4300 | 2.08 | 3.52 | 4.19 | 4.86 | 5.56 | | | | | | | | | | | 0.21 | 1.04 | 1.66 | 1.87 |
| | | 4400 | 1.95 | 3.37 | 4.02 | 4.67 | 5.32 | | | | | | | | | | | 0.21 | 1.06 | 1.70 | 1.91 |
| | | 4500 | 1.82 | 3.21 | 3.84 | 4.46 | 5.07 | | | | | | | | | | | 0.22 | 1.09 | 1.74 | 1.95 |
| | | 4600 | 1.67 | 3.03 | 3.65 | | | | | | | | | | | | | 0.22 | 1.11 | 1.78 | 2.00 |
| | | 4700 | 1.51 | 2.85 | 3.44 | | | | | | | | | | | | | 0.23 | 1.13 | 1.82 | 2.04 |
| | | 4800 | 1.34 | 2.65 | 3.21 | | | | | | | | | | | | | 0.23 | 1.16 | 1.85 | 2.08 |
| | | 4900 | 1.16 | 2.43 | 2.97 | | | | | | | | | | | | | 0.24 | 1.18 | 1.89 | 2.13 |
| | | 5000 | 0.97 | 2.20 | 2.71 | | | | | | | | | | | | | 0.24 | 1.21 | 1.93 | 2.17 |
| | 30 | | | | | | | | | | | | | | | | | | | | v (m/s) |
| Dynamically balanced (for details see DIN 2211) | | | | | | | | | | | | | | | | | | | | | Pulleys |

Where v > 30 m/s, please consult our Applications Engineering Department

# Power Ratings

## Section 20

## Nominal Power Rating $P_N$ (kW) for $\beta$ = 180° and $L_d$ = 3198 mm

*Table 50*

| Pulleys | v (m/s) | $n_k$ (min$^{-1}$) | Datum diameter of small pulley $d_{dk}$ (mm) 140 | 160 | 180 | 200 | 224 | 236 | 250 | 280 | 315 | 355 | Additional power (kW) per belt for speed ratio i 1,01 to 1,05 | 1,06 to 1,26 | 1,27 to 1,57 | >1,57 |
|---|---|---|---|---|---|---|---|---|---|---|---|---|---|---|---|---|
| Statically balanced | | **700** | 2.62 | 3.33 | 4.02 | 4.70 | 5.49 | 5.88 | 6.32 | 7.25 | 8.30 | 9.44 | 0.04 | 0.18 | 0.29 | 0.32 |
| | | **950** | 3.21 | 4.11 | 4.99 | 5.83 | 6.82 | 7.30 | 7.84 | 8.97 | 10.21 | 11.53 | 0.05 | 0.24 | 0.39 | 0.44 |
| | | **1450** | 4.08 | 5.30 | 6.46 | 7.56 | 8.80 | 9.38 | 10.03 | 11.32 | 12.61 | 13.81 | 0.07 | 0.37 | 0.59 | 0.67 |
| | | **2850** | 4.64 | 6.11 | 7.29 | 8.16 | 8.75 | 8.85 | 8.79 | 7.99 | 5.78 | | 0.15 | 0.73 | 1.17 | 1.31 |
| | | 50 | 0.34 | 0.41 | 0.48 | 0.55 | 0.63 | 0.68 | 0.72 | 0.83 | 0.94 | 1.08 | 0.00 | 0.01 | 0.02 | 0.02 |
| | | 100 | 0.60 | 0.73 | 0.86 | 0.99 | 1.15 | 1.22 | 1.31 | 1.50 | 1.71 | 1.96 | 0.01 | 0.03 | 0.04 | 0.05 |
| | | 150 | 0.82 | 1.02 | 1.20 | 1.39 | 1.61 | 1.72 | 1.84 | 2.11 | 2.42 | 2.76 | 0.01 | 0.04 | 0.06 | 0.07 |
| | | 200 | 1.04 | 1.28 | 1.52 | 1.76 | 2.04 | 2.18 | 2.34 | 2.68 | 3.07 | 3.51 | 0.01 | 0.05 | 0.08 | 0.09 |
| | | 250 | 1.23 | 1.53 | 1.82 | 2.11 | 2.45 | 2.62 | 2.82 | 3.23 | 3.70 | 4.23 | 0.01 | 0.06 | 0.10 | 0.12 |
| | | 300 | 1.42 | 1.76 | 2.11 | 2.44 | 2.84 | 3.04 | 3.27 | 3.75 | 4.29 | 4.91 | 0.02 | 0.08 | 0.12 | 0.14 |
| | | 350 | 1.59 | 1.99 | 2.38 | 2.76 | 3.22 | 3.44 | 3.70 | 4.24 | 4.87 | 5.56 | 0.02 | 0.09 | 0.14 | 0.16 |
| | | 400 | 1.76 | 2.20 | 2.64 | 3.07 | 3.58 | 3.83 | 4.11 | 4.72 | 5.41 | 6.19 | 0.02 | 0.10 | 0.16 | 0.18 |
| | | 450 | 1.92 | 2.41 | 2.89 | 3.37 | 3.92 | 4.20 | 4.51 | 5.18 | 5.94 | 6.79 | 0.02 | 0.12 | 0.18 | 0.21 |
| | | 500 | 2.07 | 2.61 | 3.13 | 3.65 | 4.26 | 4.56 | 4.90 | 5.63 | 6.45 | 7.36 | 0.03 | 0.13 | 0.21 | 0.23 |
| | | 550 | 2.22 | 2.80 | 3.37 | 3.93 | 4.58 | 4.90 | 5.28 | 6.06 | 6.94 | 7.92 | 0.03 | 0.14 | 0.23 | 0.25 |
| | | 600 | 2.36 | 2.98 | 3.59 | 4.19 | 4.90 | 5.24 | 5.64 | 6.47 | 7.41 | 8.45 | 0.03 | 0.15 | 0.25 | 0.28 |
| | | 650 | 2.49 | 3.16 | 3.81 | 4.45 | 5.20 | 5.56 | 5.99 | 6.87 | 7.86 | 8.96 | 0.03 | 0.17 | 0.27 | 0.30 |
| | 5 | 700 | 2.62 | 3.33 | 4.02 | 4.70 | 5.49 | 5.88 | 6.32 | 7.25 | 8.30 | 9.44 | 0.04 | 0.18 | 0.29 | 0.32 |
| | | 750 | 2.75 | 3.50 | 4.23 | 4.94 | 5.78 | 6.18 | 6.65 | 7.63 | 8.72 | 9.91 | 0.04 | 0.19 | 0.31 | 0.35 |
| | | 800 | 2.87 | 3.66 | 4.43 | 5.18 | 6.05 | 6.48 | 6.97 | 7.98 | 9.12 | 10.35 | 0.04 | 0.21 | 0.33 | 0.37 |
| | | 850 | 2.99 | 3.81 | 4.62 | 5.40 | 6.32 | 6.76 | 7.27 | 8.33 | 9.50 | 10.77 | 0.04 | 0.22 | 0.35 | 0.39 |
| | | 900 | 3.10 | 3.96 | 4.81 | 5.62 | 6.57 | 7.03 | 7.56 | 8.66 | 9.87 | 11.16 | 0.05 | 0.23 | 0.37 | 0.42 |
| | | 950 | 3.21 | 4.11 | 4.99 | 5.83 | 6.82 | 7.30 | 7.84 | 8.97 | 10.21 | 11.53 | 0.05 | 0.24 | 0.39 | 0.44 |
| | | 1000 | 3.31 | 4.25 | 5.16 | 6.04 | 7.06 | 7.55 | 8.11 | 9.27 | 10.54 | 11.88 | 0.05 | 0.26 | 0.41 | 0.46 |
| | | 1050 | 3.41 | 4.39 | 5.33 | 6.24 | 7.29 | 7.79 | 8.37 | 9.56 | 10.85 | 12.20 | 0.05 | 0.27 | 0.43 | 0.48 |
| | | 1100 | 3.51 | 4.52 | 5.49 | 6.43 | 7.51 | 8.03 | 8.62 | 9.83 | 11.14 | 12.50 | 0.06 | 0.28 | 0.45 | 0.51 |
| | | 1150 | 3.60 | 4.64 | 5.65 | 6.61 | 7.72 | 8.25 | 8.86 | 10.09 | 11.41 | 12.77 | 0.06 | 0.29 | 0.47 | 0.53 |
| | | 1200 | 3.69 | 4.76 | 5.80 | 6.79 | 7.92 | 8.47 | 9.08 | 10.33 | 11.66 | 13.01 | 0.06 | 0.31 | 0.49 | 0.55 |
| | | 1250 | 3.78 | 4.88 | 5.94 | 6.96 | 8.11 | 8.67 | 9.30 | 10.56 | 11.90 | 13.23 | 0.06 | 0.32 | 0.51 | 0.58 |
| | | 1300 | 3.86 | 4.99 | 6.08 | 7.12 | 8.30 | 8.86 | 9.50 | 10.77 | 12.11 | 13.42 | 0.07 | 0.33 | 0.53 | 0.60 |
| | 10 | 1350 | 3.94 | 5.10 | 6.21 | 7.27 | 8.47 | 9.05 | 9.69 | 10.97 | 12.30 | 13.58 | 0.07 | 0.35 | 0.55 | 0.62 |
| | | 1400 | 4.01 | 5.20 | 6.34 | 7.42 | 8.64 | 9.22 | 9.87 | 11.15 | 12.47 | 13.71 | 0.07 | 0.36 | 0.57 | 0.65 |
| | | 1450 | 4.08 | 5.30 | 6.46 | 7.56 | 8.80 | 9.38 | 10.03 | 11.32 | 12.61 | 13.81 | 0.07 | 0.37 | 0.59 | 0.67 |
| | | 1500 | 4.15 | 5.40 | 6.58 | 7.69 | 8.94 | 9.53 | 10.18 | 11.46 | 12.74 | 13.88 | 0.08 | 0.38 | 0.62 | 0.69 |
| | | 1550 | 4.22 | 5.49 | 6.69 | 7.82 | 9.08 | 9.67 | 10.33 | 11.60 | 12.84 | 13.92 | 0.08 | 0.40 | 0.64 | 0.71 |
| | | 1600 | 4.28 | 5.57 | 6.79 | 7.94 | 9.21 | 9.80 | 10.45 | 11.71 | 12.92 | 13.93 | 0.08 | 0.41 | 0.66 | 0.74 |
| | | 1650 | 4.34 | 5.65 | 6.89 | 8.05 | 9.33 | 9.92 | 10.57 | 11.81 | 12.97 | 13.90 | 0.08 | 0.42 | 0.68 | 0.76 |
| | | 1700 | 4.39 | 5.73 | 6.98 | 8.15 | 9.43 | 10.02 | 10.67 | 11.89 | 13.00 | 13.84 | 0.09 | 0.44 | 0.70 | 0.78 |
| | | 1750 | 4.44 | 5.80 | 7.07 | 8.24 | 9.53 | 10.12 | 10.76 | 11.95 | 13.01 | 13.75 | 0.09 | 0.45 | 0.72 | 0.81 |
| | | 1800 | 4.49 | 5.87 | 7.15 | 8.33 | 9.62 | 10.20 | 10.83 | 11.99 | 12.99 | 13.62 | 0.09 | 0.46 | 0.74 | 0.83 |
| | | 1850 | 4.53 | 5.93 | 7.22 | 8.41 | 9.69 | 10.27 | 10.89 | 12.02 | 12.94 | 13.46 | 0.09 | 0.47 | 0.76 | 0.85 |
| | | 1900 | 4.57 | 5.98 | 7.29 | 8.48 | 9.76 | 10.33 | 10.94 | 12.02 | 12.87 | 13.26 | 0.10 | 0.49 | 0.78 | 0.88 |
| | | 1950 | 4.61 | 6.04 | 7.35 | 8.55 | 9.81 | 10.38 | 10.97 | 12.01 | 12.77 | 13.02 | 0.10 | 0.50 | 0.80 | 0.90 |
| | | 2000 | 4.64 | 6.08 | 7.41 | 8.60 | 9.86 | 10.41 | 10.99 | 11.97 | 12.65 | 12.74 | 0.10 | 0.51 | 0.82 | 0.92 |
| | 15 | 2050 | 4.67 | 6.13 | 7.45 | 8.65 | 9.89 | 10.43 | 10.99 | 11.92 | 12.49 | | 0.11 | 0.53 | 0.84 | 0.95 |
| | | 2100 | 4.70 | 6.16 | 7.50 | 8.69 | 9.91 | 10.44 | 10.98 | 11.84 | 12.31 | | 0.11 | 0.54 | 0.86 | 0.97 |
| | | 2150 | 4.72 | 6.20 | 7.53 | 8.71 | 9.92 | 10.43 | 10.95 | 11.75 | 12.10 | | 0.11 | 0.55 | 0.88 | 0.99 |
| | | 2200 | 4.74 | 6.22 | 7.56 | 8.74 | 9.92 | 10.41 | 10.91 | 11.63 | 11.86 | | 0.11 | 0.56 | 0.90 | 1.01 |
| | | 2250 | 4.75 | 6.25 | 7.58 | 8.75 | 9.91 | 10.38 | 10.85 | 11.49 | 11.59 | | 0.12 | 0.58 | 0.92 | 1.04 |
| | | 2300 | 4.76 | 6.27 | 7.60 | 8.75 | 9.88 | 10.34 | 10.77 | 11.33 | | | 0.12 | 0.59 | 0.94 | 1.06 |
| | | 2350 | 4.77 | 6.28 | 7.61 | 8.75 | 9.84 | 10.28 | 10.68 | 11.14 | | | 0.12 | 0.60 | 0.96 | 1.08 |
| | | 2400 | 4.77 | 6.29 | 7.61 | 8.73 | 9.79 | 10.20 | 10.57 | 10.94 | | | 0.12 | 0.62 | 0.98 | 1.11 |
| | | 2450 | 4.77 | 6.29 | 7.60 | 8.71 | 9.73 | 10.11 | 10.44 | 10.71 | | | 0.13 | 0.63 | 1.01 | 1.13 |
| | | 2500 | 4.77 | 6.28 | 7.59 | 8.67 | 9.66 | 10.01 | 10.30 | 10.45 | | | 0.13 | 0.64 | 1.03 | 1.15 |
| | | 2550 | 4.76 | 6.28 | 7.57 | 8.63 | 9.57 | 9.89 | | | | | 0.13 | 0.65 | 1.05 | 1.18 |
| | | 2600 | 4.75 | 6.26 | 7.54 | 8.58 | 9.47 | 9.76 | | | | | 0.13 | 0.67 | 1.07 | 1.20 |
| | | 2650 | 4.74 | 6.24 | 7.51 | 8.51 | 9.35 | 9.61 | | | | | 0.14 | 0.68 | 1.09 | 1.22 |
| | 20 | 2700 | 4.72 | 6.22 | 7.47 | 8.44 | 9.22 | 9.44 | | | | | 0.14 | 0.69 | 1.11 | 1.25 |
| | | 2750 | 4.69 | 6.19 | 7.42 | 8.36 | 9.08 | 9.26 | | | | | 0.14 | 0.71 | 1.13 | 1.27 |
| | | 2800 | 4.67 | 6.15 | 7.36 | 8.27 | 8.92 | | | | | | 0.14 | 0.72 | 1.15 | 1.29 |
| | | 2850 | 4.64 | 6.11 | 7.29 | 8.16 | 8.75 | | | | | | 0.15 | 0.73 | 1.17 | 1.31 |
| | | 2900 | 4.60 | 6.06 | 7.22 | 8.05 | 8.57 | | | | | | 0.15 | 0.74 | 1.19 | 1.34 |
| | | 2950 | 4.56 | 6.01 | 7.14 | 7.93 | 8.37 | | | | | | 0.15 | 0.76 | 1.21 | 1.36 |
| | | 3000 | 4.52 | 5.95 | 7.05 | 7.79 | 8.16 | | | | | | 0.15 | 0.77 | 1.23 | 1.38 |
| | | | | | 25 | 30 | | | | | | | | | | v (m/s) |
| | | | | | | dynamically balanced | | | | | | | | | | Pulleys |

Where v > 30 m/s, please consult our Applications Engineering Department

# Power Ratings

## Section C/22

## Nominal Power Rating $P_N$ (kW) for $\beta$ = 180° and $L_d$ = 3808 mm

*Table 51*

| Pulleys | v (m/s) | $n_k$ (min$^{-1}$) | Datum diameter of small pulley $d_{dk}$ (mm) 180 | 200 | 212 | 224 | 236 | 250 | 265 | 280 | 300 | 315 | 335 | 355 | 375 | 400 | 450 | Additional power (kW) per belt for speed ratio i 1,01 to 1,05 | 1,06 to 1,26 | 1,27 to 1,57 | >1,57 |
|---|---|---|---|---|---|---|---|---|---|---|---|---|---|---|---|---|---|---|---|---|---|
| Statically balanced | | **700** | 4.51 | 5.66 | 6.35 | 7.02 | 7.69 | 8.47 | 9.28 | 10.09 | 11.16 | 11.94 | 12.98 | 14.00 | 15.00 | 16.22 | 18.58 | 0.08 | 0.40 | 0.63 | 0.71 |
| | | **950** | 5.60 | 7.08 | 7.95 | 8.81 | 9.67 | 10.64 | 11.67 | 12.69 | 14.01 | 14.98 | 16.24 | 17.47 | 18.66 | 20.10 | 22.79 | 0.11 | 0.54 | 0.86 | 0.97 |
| | | **1450** | 7.23 | 9.24 | 10.42 | 11.56 | 12.67 | 13.93 | 15.24 | 16.49 | 18.08 | 19.20 | 20.62 | 21.93 | 23.13 | 24.46 | 26.56 | 0.16 | 0.82 | 1.31 | 1.48 |
| | | **2850** | 7.54 | 9.81 | 10.94 | 11.91 | 12.69 | 13.37 | 13.79 | 13.88 | 13.47 | 12.74 | | | | | | 0.32 | 1.61 | 2.58 | 2.90 |
| | | 50 | 0.53 | 0.64 | 0.70 | 0.76 | 0.83 | 0.90 | 0.98 | 1.06 | 1.16 | 1.24 | 1.34 | 1.44 | 1.54 | 1.67 | 1.92 | 0.01 | 0.03 | 0.05 | 0.05 |
| | | 100 | 0.95 | 1.16 | 1.28 | 1.39 | 1.51 | 1.65 | 1.80 | 1.95 | 2.14 | 2.28 | 2.48 | 2.67 | 2.86 | 3.09 | 3.56 | 0.01 | 0.06 | 0.09 | 0.10 |
| | | 150 | 1.34 | 1.63 | 1.80 | 1.97 | 2.15 | 2.35 | 2.56 | 2.77 | 3.05 | 3.26 | 3.54 | 3.81 | 4.09 | 4.43 | 5.10 | 0.02 | 0.08 | 0.14 | 0.15 |
| | | 200 | 1.69 | 2.07 | 2.30 | 2.52 | 2.75 | 3.00 | 3.28 | 3.55 | 3.92 | 4.19 | 4.55 | 4.91 | 5.26 | 5.70 | 6.57 | 0.02 | 0.11 | 0.18 | 0.20 |
| | | 250 | 2.03 | 2.49 | 2.77 | 3.04 | 3.32 | 3.63 | 3.97 | 4.31 | 4.75 | 5.08 | 5.52 | 5.95 | 6.39 | 6.92 | 7.98 | 0.03 | 0.14 | 0.23 | 0.25 |
| | | 300 | 2.35 | 2.90 | 3.22 | 3.54 | 3.87 | 4.24 | 4.64 | 5.03 | 5.55 | 5.94 | 6.45 | 6.97 | 7.47 | 8.10 | 9.34 | 0.03 | 0.17 | 0.27 | 0.31 |
| | | 350 | 2.66 | 3.28 | 3.66 | 4.03 | 4.40 | 4.82 | 5.28 | 5.73 | 6.33 | 6.77 | 7.36 | 7.94 | 8.52 | 9.24 | 10.66 | 0.04 | 0.20 | 0.32 | 0.36 |
| | | 400 | 2.95 | 3.66 | 4.08 | 4.49 | 4.91 | 5.39 | 5.90 | 6.41 | 7.08 | 7.58 | 8.24 | 8.89 | 9.54 | 10.34 | 11.92 | 0.05 | 0.23 | 0.36 | 0.41 |
| | | 450 | 3.23 | 4.02 | 4.48 | 4.95 | 5.41 | 5.94 | 6.51 | 7.07 | 7.81 | 8.36 | 9.09 | 9.81 | 10.53 | 11.41 | 13.14 | 0.05 | 0.25 | 0.41 | 0.46 |
| | 5 | 500 | 3.51 | 4.37 | 4.88 | 5.39 | 5.89 | 6.47 | 7.09 | 7.71 | 8.52 | 9.12 | 9.92 | 10.70 | 11.48 | 12.44 | 14.32 | 0.06 | 0.28 | 0.45 | 0.51 |
| | | 550 | 3.77 | 4.71 | 5.26 | 5.81 | 6.36 | 6.99 | 7.67 | 8.33 | 9.21 | 9.86 | 10.72 | 11.57 | 12.41 | 13.44 | 15.46 | 0.06 | 0.31 | 0.50 | 0.56 |
| | | 600 | 4.03 | 5.04 | 5.63 | 6.23 | 6.82 | 7.50 | 8.22 | 8.94 | 9.88 | 10.58 | 11.50 | 12.41 | 13.30 | 14.40 | 16.55 | 0.07 | 0.34 | 0.54 | 0.61 |
| | | 650 | 4.27 | 5.36 | 6.00 | 6.63 | 7.26 | 7.99 | 8.76 | 9.52 | 10.53 | 11.27 | 12.25 | 13.21 | 14.16 | 15.33 | 17.59 | 0.07 | 0.37 | 0.59 | 0.66 |
| | | 700 | 4.51 | 5.66 | 6.35 | 7.02 | 7.69 | 8.47 | 9.28 | 10.09 | 11.16 | 11.94 | 12.98 | 14.00 | 15.00 | 16.22 | 18.58 | 0.08 | 0.40 | 0.63 | 0.71 |
| | | 750 | 4.74 | 5.97 | 6.69 | 7.40 | 8.11 | 8.93 | 9.79 | 10.65 | 11.77 | 12.60 | 13.68 | 14.75 | 15.80 | 17.07 | 19.53 | 0.08 | 0.42 | 0.68 | 0.76 |
| | | 800 | 4.97 | 6.26 | 7.02 | 7.77 | 8.52 | 9.38 | 10.29 | 11.18 | 12.36 | 13.23 | 14.36 | 15.47 | 16.56 | 17.89 | 20.42 | 0.09 | 0.45 | 0.72 | 0.81 |
| | | 850 | 5.18 | 6.54 | 7.34 | 8.13 | 8.91 | 9.81 | 10.76 | 11.70 | 12.93 | 13.83 | 15.01 | 16.17 | 17.30 | 18.67 | 21.27 | 0.10 | 0.48 | 0.77 | 0.87 |
| | | 900 | 5.39 | 6.81 | 7.65 | 8.48 | 9.29 | 10.24 | 11.23 | 12.20 | 13.48 | 14.42 | 15.64 | 16.83 | 18.00 | 19.40 | 22.05 | 0.10 | 0.51 | 0.81 | 0.92 |
| | | 950 | 5.60 | 7.08 | 7.95 | 8.81 | 9.67 | 10.64 | 11.67 | 12.69 | 14.01 | 14.98 | 16.24 | 17.47 | 18.66 | 20.10 | 22.79 | 0.11 | 0.54 | 0.86 | 0.97 |
| | | 1000 | 5.79 | 7.33 | 8.24 | 9.14 | 10.02 | 11.04 | 12.11 | 13.15 | 14.52 | 15.52 | 16.81 | 18.07 | 19.29 | 20.75 | 23.46 | 0.11 | 0.57 | 0.91 | 1.02 |
| | 10 | 1050 | 5.98 | 7.58 | 8.52 | 9.45 | 10.37 | 11.42 | 12.52 | 13.60 | 15.01 | 16.03 | 17.36 | 18.64 | 19.88 | 21.36 | 24.07 | 0.12 | 0.59 | 0.95 | 1.07 |
| | | 1100 | 6.16 | 7.82 | 8.80 | 9.76 | 10.70 | 11.79 | 12.92 | 14.03 | 15.47 | 16.52 | 17.87 | 19.18 | 20.43 | 21.92 | 24.62 | 0.12 | 0.62 | 1.00 | 1.12 |
| | | 1150 | 6.33 | 8.05 | 9.06 | 10.05 | 11.02 | 12.14 | 13.30 | 14.44 | 15.91 | 16.98 | 18.36 | 19.68 | 20.94 | 22.43 | 25.11 | 0.13 | 0.65 | 1.04 | 1.17 |
| | | 1200 | 6.50 | 8.27 | 9.31 | 10.33 | 11.33 | 12.47 | 13.67 | 14.83 | 16.34 | 17.42 | 18.82 | 20.15 | 21.42 | 22.90 | 25.53 | 0.14 | 0.68 | 1.09 | 1.22 |
| | | 1250 | 6.66 | 8.48 | 9.55 | 10.60 | 11.63 | 12.80 | 14.02 | 15.21 | 16.73 | 17.83 | 19.24 | 20.58 | 21.85 | 23.32 | 25.88 | 0.14 | 0.71 | 1.13 | 1.27 |
| | | 1300 | 6.81 | 8.69 | 9.78 | 10.86 | 11.91 | 13.10 | 14.35 | 15.56 | 17.11 | 18.22 | 19.64 | 20.98 | 22.23 | 23.69 | 26.17 | 0.15 | 0.74 | 1.18 | 1.32 |
| | | 1350 | 6.96 | 8.88 | 10.00 | 11.10 | 12.18 | 13.40 | 14.66 | 15.89 | 17.46 | 18.58 | 20.00 | 21.33 | 22.58 | 24.00 | 26.37 | 0.15 | 0.76 | 1.22 | 1.37 |
| | | 1400 | 7.09 | 9.07 | 10.22 | 11.34 | 12.43 | 13.67 | 14.96 | 16.20 | 17.78 | 18.91 | 20.33 | 21.65 | 22.87 | 24.26 | 26.51 | 0.16 | 0.79 | 1.27 | 1.42 |
| | | 1450 | 7.23 | 9.24 | 10.42 | 11.56 | 12.67 | 13.93 | 15.24 | 16.49 | 18.08 | 19.20 | 20.62 | 21.93 | 23.13 | 24.46 | 26.56 | 0.16 | 0.82 | 1.31 | 1.48 |
| | | 1500 | 7.35 | 9.41 | 10.60 | 11.77 | 12.90 | 14.18 | 15.50 | 16.76 | 18.35 | 19.47 | 20.88 | 22.16 | 23.33 | 24.61 | 26.54 | 0.17 | 0.85 | 1.36 | 1.53 |
| | 15 | 1550 | 7.46 | 9.57 | 10.78 | 11.97 | 13.11 | 14.41 | 15.73 | 17.00 | 18.60 | 19.71 | 21.10 | 22.36 | 23.48 | 24.70 | 26.43 | 0.18 | 0.88 | 1.40 | 1.58 |
| | | 1600 | 7.57 | 9.71 | 10.95 | 12.15 | 13.31 | 14.62 | 15.95 | 17.23 | 18.81 | 19.92 | 21.28 | 22.51 | 23.59 | 24.72 | 26.24 | 0.18 | 0.91 | 1.45 | 1.63 |
| | | 1650 | 7.67 | 9.85 | 11.11 | 12.32 | 13.49 | 14.81 | 16.15 | 17.42 | 19.00 | 20.10 | 21.43 | 22.61 | 23.64 | 24.69 | 25.96 | 0.19 | 0.93 | 1.49 | 1.68 |
| | | 1700 | 7.77 | 9.98 | 11.25 | 12.48 | 13.66 | 14.99 | 16.33 | 17.60 | 19.17 | 20.24 | 21.54 | 22.67 | 23.64 | 24.59 | 25.59 | 0.19 | 0.96 | 1.54 | 1.73 |
| | | 1750 | 7.85 | 10.10 | 11.38 | 12.62 | 13.82 | 15.14 | 16.49 | 17.75 | 19.30 | 20.35 | 21.61 | 22.69 | 23.58 | 24.42 | 25.13 | 0.20 | 0.99 | 1.58 | 1.78 |
| | | 1800 | 7.93 | 10.20 | 11.50 | 12.75 | 13.95 | 15.28 | 16.63 | 17.88 | 19.40 | 20.43 | 21.64 | 22.65 | | | | 0.20 | 1.02 | 1.63 | 1.83 |
| | | 1850 | 8.00 | 10.30 | 11.61 | 12.87 | 14.07 | 15.41 | 16.74 | 17.98 | 19.47 | 20.47 | 21.62 | 22.57 | | | | 0.21 | 1.05 | 1.67 | 1.88 |
| | | 1900 | 8.06 | 10.39 | 11.71 | 12.97 | 14.18 | 15.51 | 16.83 | 18.06 | 19.51 | 20.47 | 21.57 | 22.44 | | | | 0.22 | 1.07 | 1.72 | 1.93 |
| | | 1950 | 8.12 | 10.46 | 11.79 | 13.06 | 14.27 | 15.59 | 16.90 | 18.10 | 19.52 | 20.44 | 21.47 | 22.25 | | | | 0.22 | 1.10 | 1.77 | 1.98 |
| | | 2000 | 8.16 | 10.53 | 11.87 | 13.14 | 14.34 | 15.65 | 16.95 | 18.13 | 19.50 | 20.37 | 21.32 | 22.02 | | | | 0.23 | 1.13 | 1.81 | 2.04 |
| | | 2050 | 8.20 | 10.58 | 11.92 | 13.20 | 14.40 | 15.70 | 16.97 | 18.12 | 19.44 | | | | | | | 0.23 | 1.16 | 1.86 | 2.09 |
| | 20 | 2100 | 8.23 | 10.63 | 11.97 | 13.24 | 14.43 | 15.72 | 16.97 | 18.09 | 19.35 | | | | | | | 0.24 | 1.19 | 1.90 | 2.14 |
| | | 2150 | 8.25 | 10.66 | 12.00 | 13.27 | 14.45 | 15.72 | 16.95 | 18.03 | 19.23 | | | | | | | 0.24 | 1.22 | 1.95 | 2.19 |
| | | 2200 | 8.26 | 10.68 | 12.02 | 13.28 | 14.45 | 15.71 | 16.90 | 17.94 | 19.07 | | | | | | | 0.25 | 1.24 | 1.99 | 2.24 |
| | | 2250 | 8.26 | 10.69 | 12.03 | 13.28 | 14.44 | 15.67 | 16.83 | 17.82 | 18.87 | | | | | | | 0.25 | 1.27 | 2.04 | 2.29 |
| | | 2300 | 8.25 | 10.68 | 12.02 | 13.26 | 14.40 | 15.60 | 16.73 | | | | | | | | | 0.26 | 1.30 | 2.08 | 2.34 |
| | | 2350 | 8.24 | 10.67 | 12.00 | 13.23 | 14.35 | 15.52 | 16.60 | | | | | | | | | 0.27 | 1.33 | 2.13 | 2.39 |
| | | 2400 | 8.21 | 10.64 | 11.96 | 13.17 | 14.27 | 15.41 | 16.45 | | | | | | | | | 0.27 | 1.36 | 2.17 | 2.44 |
| | | 2450 | 8.18 | 10.60 | 11.91 | 13.10 | 14.18 | 15.28 | 16.26 | | | | | | | | | 0.28 | 1.39 | 2.22 | 2.49 |
| | | 2500 | 8.13 | 10.55 | 11.84 | 13.02 | 14.07 | 15.13 | 16.06 | | | | | | | | | 0.28 | 1.41 | 2.26 | 2.54 |
| | | 2550 | 8.08 | 10.48 | 11.76 | 12.91 | 13.94 | | | | | | | | | | | 0.29 | 1.44 | 2.31 | 2.60 |
| | | 2600 | 8.01 | 10.40 | 11.66 | 12.79 | 13.78 | | | | | | | | | | | 0.29 | 1.47 | 2.35 | 2.65 |
| | 25 | 2650 | 7.94 | 10.31 | 11.55 | 12.65 | 13.61 | | | | | | | | | | | 0.30 | 1.50 | 2.40 | 2.70 |
| | | 2700 | 7.86 | 10.20 | 11.42 | 12.49 | 13.41 | | | | | | | | | | | 0.31 | 1.53 | 2.44 | 2.75 |
| | | 2750 | 7.76 | 10.08 | 11.28 | 12.32 | 13.19 | | | | | | | | | | | 0.31 | 1.56 | 2.49 | 2.80 |
| | | 2800 | 7.66 | 9.95 | 11.12 | 12.12 | | | | | | | | | | | | 0.32 | 1.58 | 2.53 | 2.85 |
| | | 2850 | 7.54 | 9.81 | 10.94 | 11.91 | | | | | | | | | | | | 0.32 | 1.61 | 2.58 | 2.90 |
| | | 2900 | 7.42 | 9.64 | 10.75 | 11.67 | | | | | | | | | | | | 0.33 | 1.64 | 2.63 | 2.95 |
| | | 2950 | 7.28 | 9.47 | 10.54 | 11.42 | | | | | | | | | | | | 0.33 | 1.67 | 2.67 | 3.00 |
| | | 3000 | 7.14 | 9.28 | 10.31 | 11.15 | | | | | | | | | | | | 0.34 | 1.70 | 2.72 | 3.05 |
| | | 3050 | 6.98 | 9.08 | | | | | | | | | | | | | | 0.35 | 1.73 | 2.76 | 3.10 |
| | | 3100 | 6.81 | 8.86 | | | | | | | | | | | | | | 0.35 | 1.75 | 2.81 | 3.15 |
| | 30 | 3150 | 6.63 | 8.62 | | | | | | | | | | | | | | 0.36 | 1.78 | 2.85 | 3.21 |
| | | 3200 | 6.44 | 8.37 | | | | | | | | | | | | | | 0.36 | 1.81 | 2.90 | 3.26 |
| | | 3250 | 6.24 | 8.11 | | | | | | | | | | | | | | 0.37 | 1.84 | 2.94 | 3.31 |

Where v > 30 m/s, please consult our Applications Engineering Department

v (m/s)

Dynamically balanced (for details see DIN 2211)

Pulleys

# Power Ratings

## Section 25

## Nominal Power Rating $P_N$ (kW) for $\beta$ = 180° and $L_d$ = 4561 mm

*Table 52*

| Pulleys | v (m/s) | $n_k$ (min$^{-1}$) | Datum diameter of small pulley $d_{dk}$ (mm) 224 | 236 | 250 | 280 | 315 | 355 | 400 | 450 | 500 | 560 | Additional power (kW) per belt for speed ratio i 1,01 to 1,05 | 1,06 to 1,26 | 1,27 to 1,57 | >1,57 |
|---|---|---|---|---|---|---|---|---|---|---|---|---|---|---|---|---|
| Statically balanced | | **700** | 5.68 | 6.47 | 7.38 | 9.28 | 11.45 | 13.84 | 16.43 | 19.16 | 21.74 | 24.62 | 0.12 | 0.61 | 0.97 | 1.09 |
| | | **950** | 6.86 | 7.86 | 9.00 | 11.38 | 14.03 | 16.90 | 19.91 | 22.94 | 25.63 | 28.37 | 0.16 | 0.82 | 1.32 | 1.48 |
| | | **1450** | 8.15 | 9.43 | 10.88 | 13.78 | 16.81 | 19.77 | 22.40 | 24.36 | 25.21 | 24.60 | 0.25 | 1.26 | 2.01 | 2.26 |
| | | **2850** | 2.14 | 2.79 | 3.23 | 2.91 | 0.19 | | | | | | 0.49 | 2.47 | 3.95 | 4.44 |
| | | 50 | 0.71 | 0.78 | 0.87 | 1.05 | 1.26 | 1.50 | 1.76 | 2.06 | 2.35 | 2.69 | 0.01 | 0.04 | 0.07 | 0.08 |
| | | 100 | 1.26 | 1.40 | 1.56 | 1.91 | 2.31 | 2.76 | 3.26 | 3.81 | 4.35 | 5.00 | 0.02 | 0.09 | 0.14 | 0.16 |
| | | 150 | 1.76 | 1.96 | 2.20 | 2.69 | 3.27 | 3.92 | 4.64 | 5.44 | 6.22 | 7.15 | 0.03 | 0.13 | 0.21 | 0.23 |
| | | 200 | 2.22 | 2.48 | 2.79 | 3.43 | 4.18 | 5.02 | 5.96 | 6.98 | 7.99 | 9.19 | 0.03 | 0.17 | 0.28 | 0.31 |
| | | 250 | 2.65 | 2.97 | 3.34 | 4.13 | 5.04 | 6.07 | 7.21 | 8.46 | 9.69 | 11.14 | 0.04 | 0.22 | 0.35 | 0.39 |
| | | 300 | 3.06 | 3.43 | 3.87 | 4.80 | 5.87 | 7.08 | 8.41 | 9.87 | 11.30 | 12.99 | 0.05 | 0.26 | 0.42 | 0.47 |
| | | 350 | 3.44 | 3.88 | 4.38 | 5.44 | 6.67 | 8.05 | 9.57 | 11.23 | 12.86 | 14.76 | 0.06 | 0.30 | 0.49 | 0.55 |
| | 5 | 400 | 3.81 | 4.30 | 4.86 | 6.06 | 7.43 | 8.98 | 10.68 | 12.53 | 14.34 | 16.45 | 0.07 | 0.35 | 0.55 | 0.62 |
| | | 450 | 4.16 | 4.70 | 5.33 | 6.65 | 8.17 | 9.87 | 11.75 | 13.78 | 15.75 | 18.05 | 0.08 | 0.39 | 0.62 | 0.70 |
| | | 500 | 4.49 | 5.09 | 5.77 | 7.22 | 8.88 | 10.74 | 12.77 | 14.97 | 17.10 | 19.56 | 0.09 | 0.43 | 0.69 | 0.78 |
| | | 550 | 4.81 | 5.45 | 6.20 | 7.77 | 9.56 | 11.56 | 13.75 | 16.11 | 18.37 | 20.97 | 0.10 | 0.48 | 0.76 | 0.86 |
| | | 600 | 5.12 | 5.81 | 6.61 | 8.29 | 10.22 | 12.36 | 14.69 | 17.18 | 19.57 | 22.29 | 0.10 | 0.52 | 0.83 | 0.94 |
| | | 650 | 5.41 | 6.15 | 7.00 | 8.80 | 10.85 | 13.12 | 15.58 | 18.20 | 20.70 | 23.51 | 0.11 | 0.56 | 0.90 | 1.01 |
| | | 700 | 5.68 | 6.47 | 7.38 | 9.28 | 11.45 | 13.84 | 16.43 | 19.16 | 21.74 | 24.62 | 0.12 | 0.61 | 0.97 | 1.09 |
| | | 750 | 5.95 | 6.78 | 7.73 | 9.75 | 12.02 | 14.53 | 17.22 | 20.05 | 22.70 | 25.61 | 0.13 | 0.65 | 1.04 | 1.17 |
| | | 800 | 6.20 | 7.07 | 8.08 | 10.19 | 12.57 | 15.18 | 17.97 | 20.88 | 23.57 | 26.49 | 0.14 | 0.69 | 1.11 | 1.25 |
| | 10 | 850 | 6.43 | 7.35 | 8.40 | 10.61 | 13.09 | 15.79 | 18.67 | 21.64 | 24.35 | 27.25 | 0.15 | 0.74 | 1.18 | 1.33 |
| | | 900 | 6.65 | 7.61 | 8.71 | 11.00 | 13.57 | 16.37 | 19.31 | 22.33 | 25.04 | 27.88 | 0.16 | 0.78 | 1.25 | 1.40 |
| | | 950 | 6.86 | 7.86 | 9.00 | 11.38 | 14.03 | 16.90 | 19.91 | 22.94 | 25.63 | 28.37 | 0.16 | 0.82 | 1.32 | 1.48 |
| | | 1000 | 7.06 | 8.09 | 9.27 | 11.73 | 14.46 | 17.40 | 20.44 | 23.48 | 26.12 | 28.72 | 0.17 | 0.87 | 1.39 | 1.56 |
| | | 1050 | 7.24 | 8.30 | 9.52 | 12.06 | 14.86 | 17.85 | 20.92 | 23.93 | 26.50 | 28.93 | 0.18 | 0.91 | 1.46 | 1.64 |
| | | 1100 | 7.40 | 8.50 | 9.76 | 12.36 | 15.22 | 18.26 | 21.33 | 24.31 | 26.77 | 28.99 | 0.19 | 0.95 | 1.53 | 1.72 |
| | | 1150 | 7.55 | 8.69 | 9.98 | 12.64 | 15.56 | 18.62 | 21.69 | 24.60 | 26.92 | 28.88 | 0.20 | 1.00 | 1.60 | 1.79 |
| | | 1200 | 7.69 | 8.85 | 10.18 | 12.90 | 15.86 | 18.93 | 21.98 | 24.80 | 26.96 | 28.62 | 0.21 | 1.04 | 1.66 | 1.87 |
| | | 1250 | 7.81 | 9.00 | 10.36 | 13.13 | 16.12 | 19.20 | 22.20 | 24.90 | 26.87 | 28.18 | 0.22 | 1.08 | 1.73 | 1.95 |
| | 15 | 1300 | 7.92 | 9.14 | 10.52 | 13.33 | 16.35 | 19.42 | 22.36 | 24.92 | | | 0.23 | 1.13 | 1.80 | 2.03 |
| | | 1350 | 8.02 | 9.25 | 10.66 | 13.51 | 16.54 | 19.59 | 22.45 | 24.83 | | | 0.23 | 1.17 | 1.87 | 2.10 |
| | | 1400 | 8.09 | 9.35 | 10.78 | 13.66 | 16.69 | 19.71 | 22.46 | 24.65 | | | 0.24 | 1.21 | 1.94 | 2.18 |
| | | 1450 | 8.15 | 9.43 | 10.88 | 13.78 | 16.81 | 19.77 | 22.40 | 24.36 | | | 0.25 | 1.26 | 2.01 | 2.26 |
| | | 1500 | 8.20 | 9.50 | 10.96 | 13.87 | 16.89 | 19.78 | 22.26 | 23.96 | | | 0.26 | 1.30 | 2.08 | 2.34 |
| | | 1550 | 8.23 | 9.54 | 11.01 | 13.93 | 16.92 | 19.73 | | | | | 0.27 | 1.34 | 2.15 | 2.42 |
| | | 1600 | 8.24 | 9.57 | 11.05 | 13.97 | 16.92 | 19.63 | | | | | 0.28 | 1.39 | 2.22 | 2.49 |
| | | 1650 | 8.24 | 9.57 | 11.06 | 13.97 | 16.87 | 19.46 | | | | | 0.29 | 1.43 | 2.29 | 2.57 |
| | 20 | 1700 | 8.22 | 9.56 | 11.04 | 13.94 | 16.78 | 19.24 | | | | | 0.29 | 1.47 | 2.36 | 2.65 |
| | | 1750 | 8.18 | 9.52 | 11.01 | 13.88 | 16.64 | 18.95 | | | | | 0.30 | 1.52 | 2.43 | 2.73 |
| | | 1800 | 8.12 | 9.47 | 10.95 | 13.79 | 16.46 | | | | | | 0.31 | 1.56 | 2.50 | 2.81 |
| | | 1850 | 8.04 | 9.39 | 10.87 | 13.66 | 16.23 | | | | | | 0.32 | 1.60 | 2.57 | 2.88 |
| | | 1900 | 7.95 | 9.29 | 10.76 | 13.50 | 15.95 | | | | | | 0.33 | 1.65 | 2.64 | 2.96 |
| | | 1950 | 7.84 | 9.17 | 10.62 | 13.30 | 15.63 | | | | | | 0.34 | 1.69 | 2.70 | 3.04 |
| | | 2000 | 7.70 | 9.03 | 10.46 | 13.07 | 15.25 | | | | | | 0.35 | 1.73 | 2.77 | 3.12 |
| | | 2050 | 7.55 | 8.87 | 10.27 | 12.80 | | | | | | | 0.36 | 1.78 | 2.84 | 3.20 |
| | 25 | 2100 | 7.38 | 8.68 | 10.06 | 12.49 | | | | | | | 0.36 | 1.82 | 2.91 | 3.27 |
| | | 2150 | 7.19 | 8.47 | 9.82 | 12.15 | | | | | | | 0.37 | 1.86 | 2.98 | 3.35 |
| | | 2200 | 6.97 | 8.23 | 9.55 | 11.76 | | | | | | | 0.38 | 1.91 | 3.05 | 3.43 |
| | | 2250 | 6.74 | 7.97 | 9.25 | 11.34 | | | | | | | 0.39 | 1.95 | 3.12 | 3.51 |
| | | 2300 | 6.48 | 7.69 | 8.92 | | | | | | | | 0.40 | 1.99 | 3.19 | 3.59 |
| | | 2350 | 6.21 | 7.38 | 8.56 | | | | | | | | 0.41 | 2.04 | 3.26 | 3.66 |
| | | 2400 | 5.91 | 7.04 | 8.17 | | | | | | | | 0.42 | 2.08 | 3.33 | 3.74 |
| | | 2450 | 5.58 | 6.68 | 7.75 | | | | | | | | 0.42 | 2.12 | 3.40 | 3.82 |
| | | 2500 | 5.24 | 6.29 | 7.30 | | | | | | | | 0.43 | 2.17 | 3.47 | 3.90 |
| | 30 | | | | | | | | | | | | | | | v (m/s) |
| | | | Dynamically balanced (for details see DIN 2211) | | | | | | | | | | | | | Pulleys |

Where v > 30 m/s, please consult our Applications Engineering Department

# Power Ratings

## Section D/32

## Nominal Power Rating $P_N$ (kW) for $\beta$ = 180° and $L_d$ = 6375 mm

*Table 53*

| Pulleys | v (m/s) | $n_k$ (min$^{-1}$) | Datum diameter of small pulley $d_{dk}$ (mm) 315 | 355 | 375 | 400 | 425 | 450 | 500 | 560 | 630 | 670 | 710 | 750 | 800 | 900 | Additional power (kW) per belt for speed ratio i 1,01 to 1,05 | 1,06 to 1,26 | 1,27 to 1,57 | >1,57 |
|---|---|---|---|---|---|---|---|---|---|---|---|---|---|---|---|---|---|---|---|---|
| Statically balanced | | **700** | 15.30 | 19.17 | 21.05 | 23.36 | 25.62 | 27.82 | 32.05 | 36.82 | 41.91 | 44.59 | 47.08 | 49.38 | 51.98 | 56.17 | 0.23 | 1.14 | 1.82 | 2.05 |
| | | **950** | 18.50 | 23.20 | 25.45 | 28.15 | 30.75 | 33.23 | 37.80 | 42.59 | 47.12 | 49.16 | 50.77 | 51.93 | 52.71 | 51.90 | 0.31 | 1.54 | 2.47 | 2.78 |
| | | **1450** | 21.43 | 26.56 | 28.81 | 31.31 | 33.45 | 35.22 | 37.54 | 38.01 | 35.03 | | | | | | 0.47 | 2.36 | 3.77 | 4.24 |
| | | 20 | 0.80 | 0.96 | 1.04 | 1.14 | 1.24 | 1.34 | 1.54 | 1.78 | 2.05 | 2.21 | 2.36 | 2.51 | 2.71 | 3.08 | 0.01 | 0.03 | 0.05 | 0.06 |
| | | 40 | 1.46 | 1.77 | 1.93 | 2.12 | 2.31 | 2.50 | 2.87 | 3.32 | 3.84 | 4.13 | 4.42 | 4.71 | 5.07 | 5.79 | 0.01 | 0.06 | 0.10 | 0.12 |
| | | 60 | 2.08 | 2.53 | 2.75 | 3.03 | 3.31 | 3.58 | 4.13 | 4.77 | 5.52 | 5.95 | 6.37 | 6.79 | 7.31 | 8.34 | 0.02 | 0.10 | 0.16 | 0.18 |
| | | 80 | 2.66 | 3.25 | 3.54 | 3.90 | 4.26 | 4.61 | 5.32 | 6.17 | 7.14 | 7.69 | 8.24 | 8.78 | 9.46 | 10.80 | 0.03 | 0.13 | 0.21 | 0.23 |
| | | 100 | 3.22 | 3.94 | 4.29 | 4.74 | 5.18 | 5.61 | 6.48 | 7.51 | 8.70 | 9.38 | 10.05 | 10.71 | 11.54 | 13.18 | 0.03 | 0.16 | 0.26 | 0.29 |
| | | 120 | 3.76 | 4.61 | 5.03 | 5.55 | 6.07 | 6.58 | 7.61 | 8.82 | 10.23 | 11.02 | 11.81 | 12.59 | 13.56 | 15.49 | 0.04 | 0.19 | 0.31 | 0.35 |
| | | 140 | 4.28 | 5.26 | 5.74 | 6.34 | 6.94 | 7.53 | 8.71 | 10.10 | 11.71 | 12.62 | 13.52 | 14.42 | 15.53 | 17.73 | 0.05 | 0.23 | 0.36 | 0.41 |
| | | 160 | 4.79 | 5.89 | 6.43 | 7.11 | 7.78 | 8.45 | 9.78 | 11.35 | 13.16 | 14.19 | 15.20 | 16.21 | 17.46 | 19.93 | 0.05 | 0.26 | 0.42 | 0.47 |
| | | 180 | 5.29 | 6.51 | 7.11 | 7.87 | 8.61 | 9.36 | 10.83 | 12.57 | 14.58 | 15.72 | 16.84 | 17.96 | 19.34 | 22.06 | 0.06 | 0.29 | 0.47 | 0.53 |
| | | 200 | 5.77 | 7.11 | 7.78 | 8.61 | 9.43 | 10.24 | 11.86 | 13.77 | 15.97 | 17.22 | 18.45 | 19.67 | 21.18 | 24.15 | 0.06 | 0.32 | 0.52 | 0.58 |
| | | 220 | 6.24 | 7.71 | 8.43 | 9.33 | 10.22 | 11.11 | 12.87 | 14.95 | 17.34 | 18.69 | 20.02 | 21.34 | 22.97 | 26.18 | 0.07 | 0.36 | 0.57 | 0.64 |
| | | 240 | 6.70 | 8.29 | 9.07 | 10.04 | 11.01 | 11.97 | 13.86 | 16.10 | 18.68 | 20.12 | 21.56 | 22.98 | 24.73 | 28.16 | 0.08 | 0.39 | 0.62 | 0.70 |
| | | 260 | 7.16 | 8.86 | 9.70 | 10.74 | 11.78 | 12.80 | 14.84 | 17.24 | 19.99 | 21.53 | 23.06 | 24.58 | 26.44 | 30.09 | 0.08 | 0.42 | 0.68 | 0.76 |
| | | 280 | 7.60 | 9.42 | 10.31 | 11.43 | 12.53 | 13.63 | 15.79 | 18.35 | 21.27 | 22.91 | 24.54 | 26.14 | 28.11 | 31.96 | 0.09 | 0.45 | 0.73 | 0.82 |
| | | 300 | 8.04 | 9.97 | 10.92 | 12.10 | 13.27 | 14.44 | 16.73 | 19.44 | 22.53 | 24.27 | 25.98 | 27.67 | 29.74 | 33.78 | 0.10 | 0.49 | 0.78 | 0.88 |
| | 5 | 320 | 8.47 | 10.51 | 11.51 | 12.77 | 14.00 | 15.23 | 17.66 | 20.51 | 23.77 | 25.59 | 27.39 | 29.16 | 31.33 | 35.55 | 0.10 | 0.52 | 0.83 | 0.94 |
| | | 340 | 8.89 | 11.04 | 12.10 | 13.42 | 14.72 | 16.01 | 18.56 | 21.56 | 24.97 | 26.88 | 28.76 | 30.61 | 32.87 | 37.26 | 0.11 | 0.55 | 0.88 | 0.99 |
| | | 360 | 9.30 | 11.56 | 12.68 | 14.06 | 15.43 | 16.78 | 19.46 | 22.59 | 26.16 | 28.15 | 30.10 | 32.02 | 34.37 | 38.90 | 0.12 | 0.58 | 0.94 | 1.05 |
| | | 380 | 9.71 | 12.07 | 13.24 | 14.69 | 16.12 | 17.54 | 20.33 | 23.60 | 27.31 | 29.38 | 31.41 | 33.40 | 35.83 | 40.49 | 0.12 | 0.62 | 0.99 | 1.11 |
| | | 400 | 10.11 | 12.58 | 13.80 | 15.31 | 16.80 | 18.28 | 21.19 | 24.59 | 28.44 | 30.59 | 32.68 | 34.74 | 37.24 | 42.02 | 0.13 | 0.65 | 1.04 | 1.17 |
| | | 420 | 10.50 | 13.08 | 14.35 | 15.92 | 17.47 | 19.01 | 22.03 | 25.56 | 29.55 | 31.76 | 33.92 | 36.03 | 38.60 | 43.48 | 0.14 | 0.68 | 1.09 | 1.23 |
| | | 440 | 10.88 | 13.56 | 14.89 | 16.52 | 18.13 | 19.73 | 22.86 | 26.51 | 30.62 | 32.90 | 35.12 | 37.29 | 39.91 | 44.88 | 0.14 | 0.71 | 1.14 | 1.29 |
| | | 460 | 11.26 | 14.04 | 15.41 | 17.11 | 18.78 | 20.43 | 23.67 | 27.44 | 31.67 | 34.01 | 36.29 | 38.50 | 41.18 | 46.21 | 0.15 | 0.75 | 1.20 | 1.34 |
| | | 480 | 11.63 | 14.52 | 15.93 | 17.69 | 19.42 | 21.12 | 24.46 | 28.34 | 32.69 | 35.09 | 37.41 | 39.67 | 42.39 | 47.47 | 0.16 | 0.78 | 1.25 | 1.40 |
| | | 500 | 12.00 | 14.98 | 16.45 | 18.25 | 20.04 | 21.80 | 25.24 | 29.23 | 33.69 | 36.13 | 38.50 | 40.80 | 43.55 | 48.66 | 0.16 | 0.81 | 1.30 | 1.46 |
| | | 520 | 12.36 | 15.44 | 16.95 | 18.81 | 20.65 | 22.46 | 26.00 | 30.09 | 34.65 | 37.14 | 39.55 | 41.88 | 44.66 | 49.78 | 0.17 | 0.84 | 1.35 | 1.52 |
| | | 540 | 12.71 | 15.88 | 17.44 | 19.36 | 21.25 | 23.11 | 26.74 | 30.93 | 35.58 | 38.12 | 40.56 | 42.91 | 45.71 | 50.82 | 0.18 | 0.88 | 1.40 | 1.58 |
| | | 560 | 13.06 | 16.32 | 17.92 | 19.90 | 21.84 | 23.75 | 27.47 | 31.75 | 36.49 | 39.06 | 41.53 | 43.90 | 46.71 | 51.78 | 0.18 | 0.91 | 1.46 | 1.64 |
| | | 580 | 13.40 | 16.75 | 18.40 | 20.42 | 22.42 | 24.37 | 28.18 | 32.55 | 37.36 | 39.96 | 42.46 | 44.84 | 47.64 | 52.67 | 0.19 | 0.94 | 1.51 | 1.69 |
| | | 600 | 13.73 | 17.18 | 18.86 | 20.94 | 22.98 | 24.98 | 28.87 | 33.32 | 38.20 | 40.83 | 43.34 | 45.73 | 48.52 | 53.47 | 0.19 | 0.97 | 1.56 | 1.75 |
| | 10 | 620 | 14.06 | 17.59 | 19.32 | 21.45 | 23.53 | 25.58 | 29.54 | 34.07 | 39.01 | 41.66 | 44.18 | 46.56 | 49.34 | 54.19 | 0.20 | 1.01 | 1.61 | 1.81 |
| | | 640 | 14.38 | 18.00 | 19.77 | 21.94 | 24.07 | 26.16 | 30.20 | 34.79 | 39.79 | 42.45 | 44.98 | 47.35 | 50.10 | 54.82 | 0.21 | 1.04 | 1.66 | 1.87 |
| | | 660 | 14.69 | 18.40 | 20.20 | 22.43 | 24.60 | 26.73 | 30.83 | 35.49 | 40.53 | 43.20 | 45.72 | 48.08 | 50.79 | 55.36 | 0.21 | 1.07 | 1.72 | 1.93 |
| | | 680 | 15.00 | 18.79 | 20.63 | 22.90 | 25.11 | 27.28 | 31.45 | 36.17 | 41.24 | 43.92 | 46.43 | 48.76 | 51.42 | 55.81 | 0.22 | 1.10 | 1.77 | 1.99 |
| | | 700 | 15.30 | 19.17 | 21.05 | 23.36 | 25.62 | 27.82 | 32.05 | 36.82 | 41.91 | 44.59 | 47.08 | 49.38 | 51.98 | 56.17 | 0.23 | 1.14 | 1.82 | 2.05 |
| | | 720 | 15.59 | 19.54 | 21.46 | 23.81 | 26.11 | 28.34 | 32.63 | 37.44 | 42.55 | 45.22 | 47.68 | 49.95 | 52.47 | 56.44 | 0.23 | 1.17 | 1.87 | 2.10 |
| | | 740 | 15.88 | 19.90 | 21.86 | 24.25 | 26.58 | 28.85 | 33.19 | 38.04 | 43.16 | 45.80 | 48.24 | 50.45 | 52.89 | 56.61 | 0.24 | 1.20 | 1.92 | 2.16 |
| | | 760 | 16.16 | 20.26 | 22.25 | 24.68 | 27.04 | 29.34 | 33.73 | 38.61 | 43.72 | 46.35 | 48.74 | 50.90 | 53.24 | 56.67 | 0.25 | 1.23 | 1.98 | 2.22 |
| | | 780 | 16.44 | 20.61 | 22.63 | 25.10 | 27.49 | 29.82 | 34.25 | 39.15 | 44.25 | 46.84 | 49.19 | 51.29 | 53.52 | 56.64 | 0.25 | 1.27 | 2.03 | 2.28 |
| | | 800 | 16.71 | 20.95 | 23.00 | 25.50 | 27.93 | 30.28 | 34.75 | 39.66 | 44.74 | 47.30 | 49.59 | 51.61 | 53.73 | 56.50 | 0.26 | 1.30 | 2.08 | 2.34 |
| | | 820 | 16.97 | 21.28 | 23.36 | 25.90 | 28.35 | 30.73 | 35.23 | 40.15 | 45.19 | 47.70 | 49.94 | 51.87 | | | 0.27 | 1.33 | 2.13 | 2.40 |
| | | 840 | 17.22 | 21.60 | 23.71 | 26.28 | 28.76 | 31.16 | 35.68 | 40.61 | 45.60 | 48.06 | 50.22 | 52.07 | | | 0.27 | 1.36 | 2.18 | 2.45 |
| | | 860 | 17.47 | 21.91 | 24.05 | 26.65 | 29.16 | 31.57 | 36.12 | 41.04 | 45.97 | 48.38 | 50.46 | 52.20 | | | 0.28 | 1.40 | 2.24 | 2.51 |
| | | 880 | 17.71 | 22.21 | 24.38 | 27.00 | 29.54 | 31.97 | 36.53 | 41.44 | 46.30 | 48.64 | 50.63 | 52.26 | | | 0.29 | 1.43 | 2.29 | 2.57 |
| | 15 | 900 | 17.95 | 22.51 | 24.70 | 27.35 | 29.90 | 32.35 | 36.92 | 41.81 | 46.59 | 48.85 | 50.74 | 52.25 | | | 0.29 | 1.46 | 2.34 | 2.63 |
| | | 920 | 18.18 | 22.79 | 25.00 | 27.68 | 30.25 | 32.71 | 37.29 | 42.14 | 46.84 | 49.01 | | | | | 0.30 | 1.49 | 2.39 | 2.69 |
| | | 940 | 18.40 | 23.07 | 25.30 | 28.00 | 30.59 | 33.06 | 37.64 | 42.45 | 47.04 | 49.12 | | | | | 0.31 | 1.53 | 2.44 | 2.75 |
| | | 960 | 18.61 | 23.33 | 25.59 | 28.31 | 30.91 | 33.39 | 37.96 | 42.72 | 47.19 | 49.18 | | | | | 0.31 | 1.56 | 2.50 | 2.81 |
| | | 980 | 18.82 | 23.59 | 25.86 | 28.60 | 31.21 | 33.70 | 38.26 | 42.97 | 47.31 | 49.18 | | | | | 0.32 | 1.59 | 2.55 | 2.86 |
| | | 1000 | 19.02 | 23.83 | 26.13 | 28.88 | 31.50 | 33.99 | 38.53 | 43.18 | 47.37 | 49.13 | | | | | 0.32 | 1.62 | 2.60 | 2.92 |
| | | 1020 | 19.21 | 24.07 | 26.38 | 29.15 | 31.78 | 34.26 | 38.78 | 43.35 | 47.39 | | | | | | 0.33 | 1.66 | 2.65 | 2.98 |
| | | 1040 | 19.39 | 24.30 | 26.62 | 29.40 | 32.04 | 34.52 | 39.01 | 43.49 | 47.36 | | | | | | 0.34 | 1.69 | 2.70 | 3.04 |
| | | 1060 | 19.57 | 24.51 | 26.85 | 29.64 | 32.28 | 34.76 | 39.21 | 43.60 | 47.29 | | | | | | 0.34 | 1.72 | 2.76 | 3.10 |
| | | 1080 | 19.74 | 24.72 | 27.07 | 29.87 | 32.50 | 34.97 | 39.38 | 43.67 | 47.16 | | | | | | 0.35 | 1.75 | 2.81 | 3.16 |
| | | 1100 | 19.90 | 24.92 | 27.27 | 30.08 | 32.71 | 35.17 | 39.53 | 43.71 | 46.99 | | | | | | 0.36 | 1.79 | 2.86 | 3.21 |
| | | 1120 | 20.06 | 25.10 | 27.47 | 30.28 | 32.91 | 35.35 | 39.66 | 43.71 | | | | | | | 0.36 | 1.82 | 2.91 | 3.27 |
| | | 1140 | 20.20 | 25.28 | 27.65 | 30.46 | 33.08 | 35.51 | 39.75 | 43.67 | | | | | | | 0.37 | 1.85 | 2.96 | 3.33 |
| | | 1160 | 20.34 | 25.44 | 27.82 | 30.63 | 33.24 | 35.65 | 39.82 | 43.60 | | | | | | | 0.38 | 1.88 | 3.02 | 3.39 |
| | | 1180 | 20.47 | 25.59 | 27.98 | 30.78 | 33.38 | 35.77 | 39.86 | 43.49 | | | | | | | 0.38 | 1.92 | 3.07 | 3.45 |
| | 20 | 1200 | 20.60 | 25.74 | 28.12 | 30.92 | 33.50 | 35.86 | 39.87 | 43.34 | | | | | | | 0.39 | 1.95 | 3.12 | 3.51 |
| | | 1220 | 20.71 | 25.87 | 28.25 | 31.04 | 33.61 | 35.94 | 39.86 | | | | | | | | 0.40 | 1.98 | 3.17 | 3.56 |
| | | 1240 | 20.82 | 25.99 | 28.37 | 31.15 | 33.69 | 35.99 | 39.82 | | | | | | | | 0.40 | 2.01 | 3.22 | 3.62 |
| | | 1260 | 20.92 | 26.10 | 28.48 | 31.24 | 33.76 | 36.03 | 39.74 | | | | | | | | 0.41 | 2.05 | 3.28 | 3.68 |
| | | 1280 | 21.01 | 26.20 | 28.57 | 31.32 | 33.81 | 36.04 | 39.64 | | | | | | | | 0.42 | 2.08 | 3.33 | 3.74 |
| | | 1300 | 21.09 | 26.28 | 28.65 | 31.38 | 33.84 | 36.03 | 39.51 | | | | | | | | 0.42 | 2.11 | 3.38 | 3.80 |
| | | 1320 | 21.16 | 26.36 | 28.72 | 31.43 | 33.86 | 36.00 | | | | | | | | | 0.43 | 2.14 | 3.43 | 3.86 |
| | | 1340 | 21.23 | 26.42 | 28.77 | 31.45 | 33.85 | 35.94 | | | | | | | | | 0.44 | 2.18 | 3.48 | 3.92 |
| | | 1360 | 21.29 | 26.47 | 28.81 | 31.47 | 33.82 | 35.86 | | | | | | | | | 0.44 | 2.21 | 3.53 | 3.97 |
| | | 1380 | 21.34 | 26.51 | 28.83 | 31.46 | 33.78 | 35.76 | | | | | | | | | 0.45 | 2.24 | 3.59 | 4.03 |
| | | 1400 | 21.37 | 26.54 | 28.84 | 31.44 | 33.71 | 35.64 | | | | | | | | | 0.45 | 2.27 | 3.64 | 4.09 |
| | | | 25 | | | 30 | | | | | | | | | | | | | | v (m/s) |
| | | | | | | | Dynamically balanced (for details see DIN 2211) | | | | | | | | | | | | | Pulleys |

Where v > 30 m/s, please consult our Applications Engineering Department

# Power Ratings

## Section E/40

## Nominal Power Rating $P_N$ (kW) for $\beta$ = 180° and $L_d$ = 7180 mm

*Table 54*

| Pulleys | v (m/s) | $n_k$ (min$^{-1}$) | Datum diameter of small pulley $d_{dk}$ (mm) 450 | 500 | 560 | 630 | 670 | 710 | 750 | 800 | 850 | 900 | 950 | 1000 | Additional power (kW) per belt for speed ratio i 1,01 to 1,05 | 1,06 to 1,26 | 1,27 to 1,57 | >1,57 |
|---|---|---|---|---|---|---|---|---|---|---|---|---|---|---|---|---|---|---|
| Statically balanced | | **700** | 26.44 | 31.70 | 37.57 | 43.78 | 47.00 | 49.97 | 52.68 | 55.67 | 58.21 | 60.27 | 61.83 | 62.87 | 0.38 | 1.92 | 3.07 | 3.45 |
| | | **950** | 29.78 | 35.30 | 40.95 | 46.07 | 48.23 | 49.80 | 50.75 | 51.00 | 50.17 | 48.20 | 45.02 | | 0.52 | 2.60 | 4.16 | 4.68 |
| | | **1450** | 24.24 | 26.19 | 25.31 | 19.38 | | | | | | | | | 0.79 | 3.97 | 6.35 | 7.14 |
| | | 20 | 1.47 | 1.72 | 2.02 | 2.37 | 2.57 | 2.76 | 2.96 | 3.20 | 3.44 | 3.68 | 3.92 | 4.16 | 0.01 | 0.05 | 0.09 | 0.10 |
| | | 40 | 2.70 | 3.17 | 3.74 | 4.40 | 4.77 | 5.14 | 5.51 | 5.97 | 6.42 | 6.88 | 7.33 | 7.78 | 0.02 | 0.11 | 0.18 | 0.20 |
| | | 60 | 3.83 | 4.52 | 5.34 | 6.29 | 6.83 | 7.37 | 7.90 | 8.57 | 9.22 | 9.88 | 10.53 | 11.18 | 0.03 | 0.16 | 0.26 | 0.30 |
| | | 80 | 4.90 | 5.80 | 6.87 | 8.10 | 8.80 | 9.50 | 10.19 | 11.05 | 11.90 | 12.75 | 13.60 | 14.43 | 0.04 | 0.22 | 0.35 | 0.39 |
| | | 100 | 5.92 | 7.03 | 8.34 | 9.85 | 10.70 | 11.55 | 12.40 | 13.44 | 14.49 | 15.52 | 16.55 | 17.57 | 0.05 | 0.27 | 0.44 | 0.49 |
| | | 120 | 6.91 | 8.21 | 9.76 | 11.53 | 12.54 | 13.54 | 14.53 | 15.77 | 16.99 | 18.20 | 19.41 | 20.60 | 0.07 | 0.33 | 0.53 | 0.59 |
| | | 140 | 7.87 | 9.36 | 11.13 | 13.17 | 14.33 | 15.47 | 16.61 | 18.02 | 19.42 | 20.80 | 22.18 | 23.54 | 0.08 | 0.38 | 0.61 | 0.69 |
| | | 160 | 8.80 | 10.48 | 12.47 | 14.77 | 16.06 | 17.35 | 18.63 | 20.21 | 21.78 | 23.33 | 24.87 | 26.39 | 0.09 | 0.44 | 0.70 | 0.79 |
| | | 180 | 9.70 | 11.57 | 13.78 | 16.32 | 17.76 | 19.18 | 20.59 | 22.34 | 24.07 | 25.79 | 27.48 | 29.16 | 0.10 | 0.49 | 0.79 | 0.89 |
| | | 200 | 10.58 | 12.63 | 15.05 | 17.84 | 19.41 | 20.97 | 22.51 | 24.42 | 26.30 | 28.17 | 30.01 | 31.83 | 0.11 | 0.55 | 0.88 | 0.98 |
| | 5 | 220 | 11.43 | 13.66 | 16.29 | 19.32 | 21.02 | 22.71 | 24.37 | 26.44 | 28.47 | 30.48 | 32.47 | 34.42 | 0.12 | 0.60 | 0.96 | 1.08 |
| | | 240 | 12.27 | 14.67 | 17.51 | 20.76 | 22.59 | 24.40 | 26.19 | 28.40 | 30.58 | 32.73 | 34.84 | 36.93 | 0.13 | 0.66 | 1.05 | 1.18 |
| | | 260 | 13.08 | 15.66 | 18.69 | 22.17 | 24.12 | 26.05 | 27.96 | 30.31 | 32.62 | 34.90 | 37.14 | 39.34 | 0.14 | 0.71 | 1.14 | 1.28 |
| | | 280 | 13.88 | 16.62 | 19.85 | 23.54 | 25.62 | 27.66 | 29.68 | 32.16 | 34.60 | 37.00 | 39.35 | 41.66 | 0.15 | 0.77 | 1.23 | 1.38 |
| | | 300 | 14.66 | 17.56 | 20.98 | 24.88 | 27.07 | 29.23 | 31.35 | 33.96 | 36.52 | 39.02 | 41.48 | 43.88 | 0.16 | 0.82 | 1.31 | 1.48 |
| | | 320 | 15.42 | 18.48 | 22.09 | 26.19 | 28.49 | 30.75 | 32.97 | 35.70 | 38.37 | 40.97 | 43.52 | 46.01 | 0.18 | 0.88 | 1.40 | 1.58 |
| | | 340 | 16.16 | 19.38 | 23.16 | 27.46 | 29.86 | 32.22 | 34.54 | 37.38 | 40.15 | 42.85 | 45.48 | 48.03 | 0.19 | 0.93 | 1.49 | 1.67 |
| | | 360 | 16.88 | 20.26 | 24.21 | 28.70 | 31.20 | 33.65 | 36.06 | 39.00 | 41.86 | 44.64 | 47.34 | 49.95 | 0.20 | 0.99 | 1.58 | 1.77 |
| | | 380 | 17.59 | 21.11 | 25.23 | 29.90 | 32.49 | 35.04 | 37.52 | 40.55 | 43.50 | 46.35 | 49.10 | 51.76 | 0.21 | 1.04 | 1.66 | 1.87 |
| | | 400 | 18.28 | 21.94 | 26.23 | 31.06 | 33.75 | 36.37 | 38.93 | 42.05 | 45.06 | 47.97 | 50.77 | 53.47 | 0.22 | 1.09 | 1.75 | 1.97 |
| | | 420 | 18.95 | 22.76 | 27.19 | 32.19 | 34.96 | 37.66 | 40.29 | 43.48 | 46.55 | 49.51 | 52.34 | 55.05 | 0.23 | 1.15 | 1.84 | 2.07 |
| | 10 | 440 | 19.60 | 23.54 | 28.13 | 33.29 | 36.13 | 38.90 | 41.59 | 44.84 | 47.97 | 50.96 | 53.81 | 56.52 | 0.24 | 1.20 | 1.93 | 2.17 |
| | | 460 | 20.24 | 24.31 | 29.04 | 34.34 | 37.26 | 40.09 | 42.83 | 46.14 | 49.30 | 52.31 | 55.17 | 57.86 | 0.25 | 1.26 | 2.02 | 2.27 |
| | | 480 | 20.86 | 25.06 | 29.92 | 35.36 | 38.34 | 41.23 | 44.02 | 47.37 | 50.55 | 53.57 | 56.42 | 59.08 | 0.26 | 1.31 | 2.10 | 2.36 |
| | | 500 | 21.46 | 25.78 | 30.78 | 36.33 | 39.37 | 42.31 | 45.14 | 48.52 | 51.72 | 54.73 | 57.55 | 60.16 | 0.27 | 1.37 | 2.19 | 2.46 |
| | | 520 | 22.04 | 26.48 | 31.60 | 37.27 | 40.36 | 43.34 | 46.20 | 49.60 | 52.80 | 55.79 | 58.57 | 61.11 | 0.28 | 1.42 | 2.28 | 2.56 |
| | | 540 | 22.61 | 27.16 | 32.39 | 38.17 | 41.31 | 44.32 | 47.20 | 50.60 | 53.79 | 56.75 | 59.46 | 61.92 | 0.30 | 1.48 | 2.37 | 2.66 |
| | | 560 | 23.15 | 27.81 | 33.15 | 39.03 | 42.20 | 45.24 | 48.13 | 51.53 | 54.69 | 57.60 | 60.23 | 62.59 | 0.31 | 1.53 | 2.45 | 2.76 |
| | | 580 | 23.68 | 28.44 | 33.88 | 39.84 | 43.04 | 46.10 | 48.99 | 52.38 | 55.50 | 58.33 | 60.87 | 63.11 | 0.32 | 1.59 | 2.54 | 2.86 |
| | | 600 | 24.19 | 29.04 | 34.58 | 40.61 | 43.84 | 46.90 | 49.79 | 53.14 | 56.21 | 58.96 | 61.39 | 63.48 | 0.33 | 1.64 | 2.63 | 2.95 |
| | 15 | 620 | 24.68 | 29.63 | 35.24 | 41.34 | 44.58 | 47.64 | 50.51 | 53.83 | 56.81 | 59.46 | 61.76 | | 0.34 | 1.70 | 2.72 | 3.05 |
| | | 640 | 25.15 | 30.18 | 35.88 | 42.02 | 45.27 | 48.32 | 51.17 | 54.42 | 57.32 | 59.85 | 62.00 | | 0.35 | 1.75 | 2.80 | 3.15 |
| | | 660 | 25.60 | 30.71 | 36.47 | 42.65 | 45.90 | 48.94 | 51.75 | 54.93 | 57.72 | 60.12 | 62.09 | | 0.36 | 1.81 | 2.89 | 3.25 |
| | | 680 | 26.03 | 31.22 | 37.04 | 43.24 | 46.48 | 49.49 | 52.25 | 55.34 | 58.02 | 60.26 | 62.04 | | 0.37 | 1.86 | 2.98 | 3.35 |
| | | 700 | 26.44 | 31.70 | 37.57 | 43.78 | 47.00 | 49.97 | 52.68 | 55.67 | 58.21 | 60.27 | 61.83 | | 0.38 | 1.92 | 3.07 | 3.45 |
| | | 720 | 26.84 | 32.15 | 38.06 | 44.27 | 47.47 | 50.39 | 53.02 | 55.90 | | | | | 0.39 | 1.97 | 3.15 | 3.55 |
| | | 740 | 27.21 | 32.57 | 38.52 | 44.71 | 47.87 | 50.73 | 53.29 | 56.03 | | | | | 0.41 | 2.03 | 3.24 | 3.64 |
| | | 760 | 27.56 | 32.97 | 38.94 | 45.10 | 48.22 | 51.01 | 53.47 | 56.06 | | | | | 0.42 | 2.08 | 3.33 | 3.74 |
| | | 780 | 27.89 | 33.34 | 39.32 | 45.44 | 48.50 | 51.21 | 53.57 | 55.99 | | | | | 0.43 | 2.14 | 3.42 | 3.84 |
| | | 800 | 28.19 | 33.68 | 39.66 | 45.73 | 48.72 | 51.34 | 53.59 | 55.82 | | | | | 0.44 | 2.19 | 3.50 | 3.94 |
| | | 820 | 28.48 | 34.00 | 39.97 | 45.96 | 48.87 | 51.40 | | | | | | | 0.45 | 2.24 | 3.59 | 4.04 |
| | 20 | 840 | 28.74 | 34.28 | 40.23 | 46.13 | 48.96 | 51.38 | | | | | | | 0.46 | 2.30 | 3.68 | 4.14 |
| | | 860 | 28.98 | 34.54 | 40.46 | 46.25 | 48.99 | 51.27 | | | | | | | 0.47 | 2.35 | 3.77 | 4.24 |
| | | 880 | 29.20 | 34.76 | 40.64 | 46.32 | 48.94 | 51.09 | | | | | | | 0.48 | 2.41 | 3.86 | 4.33 |
| | | 900 | 29.39 | 34.95 | 40.78 | 46.32 | 48.83 | 50.83 | | | | | | | 0.49 | 2.46 | 3.94 | 4.43 |
| | | 920 | 29.57 | 35.11 | 40.88 | 46.27 | | | | | | | | | 0.50 | 2.52 | 4.03 | 4.53 |
| | | 940 | 29.71 | 35.24 | 40.94 | 46.15 | | | | | | | | | 0.51 | 2.57 | 4.12 | 4.63 |
| | | 960 | 29.84 | 35.34 | 40.95 | 45.98 | | | | | | | | | 0.53 | 2.63 | 4.21 | 4.73 |
| | | 980 | 29.93 | 35.41 | 40.91 | 45.74 | | | | | | | | | 0.54 | 2.68 | 4.29 | 4.83 |
| | | 1000 | 30.01 | 35.44 | 40.83 | 45.43 | | | | | | | | | 0.55 | 2.74 | 4.38 | 4.92 |
| | | 1020 | 30.06 | 35.44 | 40.71 | 45.07 | | | | | | | | | 0.56 | 2.79 | 4.47 | 5.02 |
| | | 1040 | 30.08 | 35.40 | 40.53 | 44.63 | | | | | | | | | 0.57 | 2.85 | 4.56 | 5.12 |
| | 25 | 1060 | 30.07 | 35.33 | 40.31 | 44.13 | | | | | | | | | 0.58 | 2.90 | 4.64 | 5.22 |
| | | 1080 | 30.04 | 35.22 | 40.04 | 43.56 | | | | | | | | | 0.59 | 2.96 | 4.73 | 5.32 |
| | | 1100 | 29.99 | 35.08 | 39.72 | 42.93 | | | | | | | | | 0.60 | 3.01 | 4.82 | 5.42 |
| | | 1120 | 29.90 | 34.90 | 39.35 | | | | | | | | | | 0.61 | 3.07 | 4.91 | 5.52 |
| | | 1140 | 29.79 | 34.68 | 38.93 | | | | | | | | | | 0.62 | 3.12 | 4.99 | 5.61 |
| | | 1160 | 29.65 | 34.43 | 38.46 | | | | | | | | | | 0.64 | 3.18 | 5.08 | 5.71 |
| | | 1180 | 29.48 | 34.14 | 37.93 | | | | | | | | | | 0.65 | 3.23 | 5.17 | 5.81 |
| | | 1200 | 29.29 | 33.81 | 37.36 | | | | | | | | | | 0.66 | 3.28 | 5.26 | 5.91 |
| | | 1220 | 29.06 | 33.44 | | | | | | | | | | | 0.67 | 3.34 | 5.34 | 6.01 |
| | | 1240 | 28.80 | 33.03 | | | | | | | | | | | 0.68 | 3.39 | 5.43 | 6.11 |
| | 30 | 1260 | 28.52 | 32.58 | | | | | | | | | | | 0.69 | 3.45 | 5.52 | 6.21 |
| | | 1280 | 28.20 | 32.09 | | | | | | | | | | | 0.70 | 3.50 | 5.61 | 6.30 |
| | | 1300 | 27.86 | 31.55 | | | | | | | | | | | 0.71 | 3.56 | 5.70 | 6.40 |

Where v > 30 m/s, please consult our Applications Engineering Department

v (m/s)

Dynamically balanced (for details see DIN 2211)

Pulleys

# Special Drives
## V-Flat Drives

The V-flat drive comprises one grooved pulley and one flat pulley. This type of power transmission can, under certain conditions, be used for drives with intermittent loading or with a large moment of inertia. As flywheels or flat pulleys are often already present, the costs of the drive can be reduced. When converting a flat belt drive to a V-flat drive, it will usually be economic to continue to use the flat pulley.

| | | | |
|---|---|---|---|
| $a$ | = | drive centre distance | (mm) |
| $b$ | = | face width of the flat pulley | (mm) |
| $b_u$ | = | bottom width of the belt | (mm) |
| $b_2$ | = | face width of the grooved pulley | (mm) |
| $D_a$ | = | outside diameter of the flat pulley | (mm) |
| $D_Z$ | = | correction factor for determination of the theoretical diameter | (mm) |
| $d_a$ | = | outside diameter of the grooved pulley | (mm) |
| $d_d$ | = | datum diameter of the grooved pulley | (mm) |
| $F_l$ | = | area of the V-belt on the flat pulley | ($cm^2$) |
| $f$ | = | correction factor for calculating the face width of the flat pulley | (mm) |
| $h$ | = | height of crown per 100 mm pulley face width | (mm) |
| $i$ | = | speed ratio | |
| $L_{ath}$ | = | calculated outside length of the Kraftband | (mm) |
| $L_{dth}$ | = | calculated datum length of the V-belt | (mm) |
| $p_f$ | = | specific surface pressure | ($N/cm^2$) |
| $P$ | = | power to be transmitted by the belt drive | (kW) |
| $S_n$ | = | circumferential force | (N) |
| $\alpha$ | = | arc of contact on the flat pulley = 360° - β | (degrees) |
| $kf$ | = | factor | |

Datum length $L_d \triangleq$ pitch length $L_w$

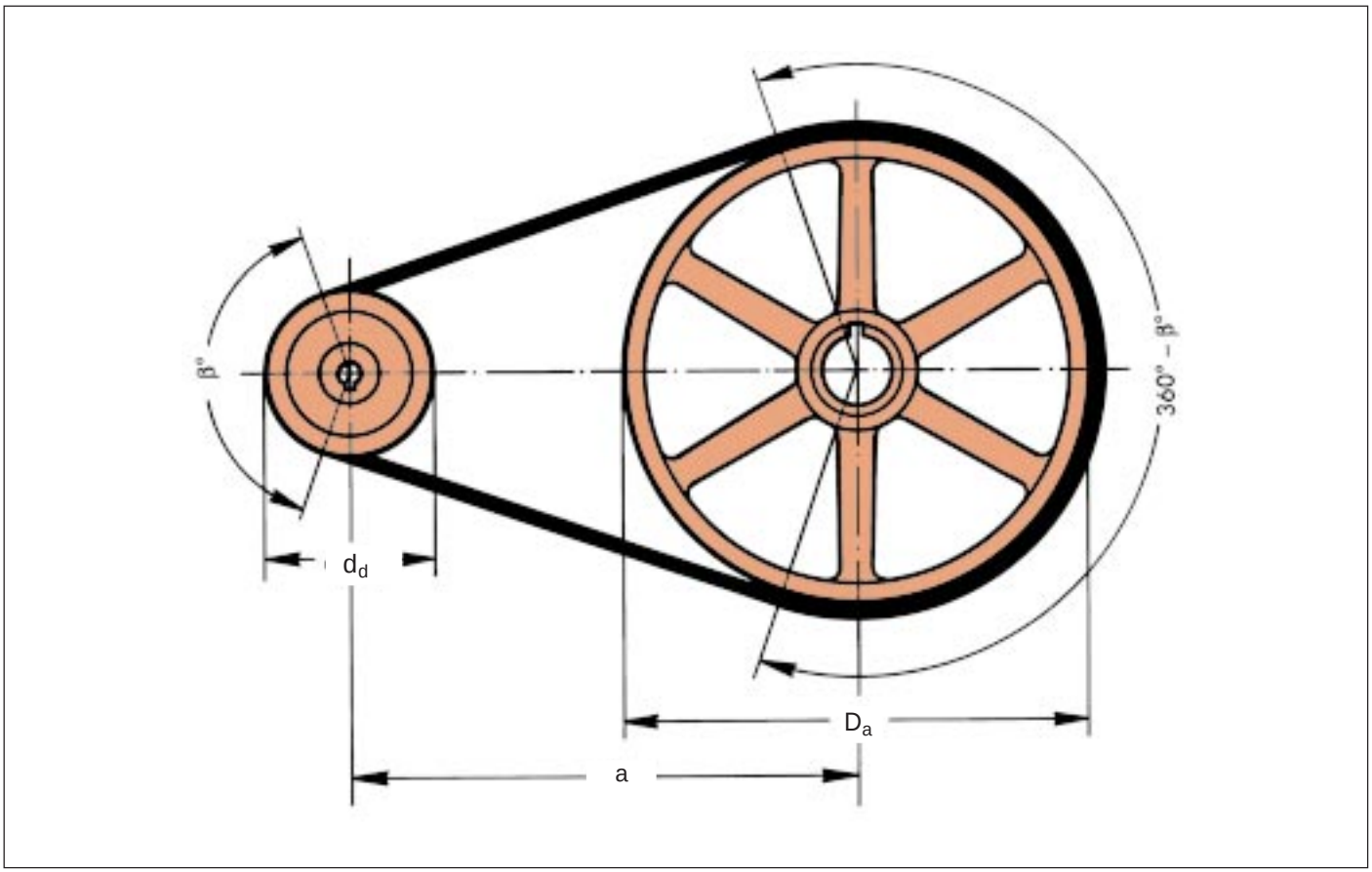

# Special Drives
## V-Flat Drives

### Calculating V-Flat Drives

The calculation of a V-flat drive uses the same method as the one set out on pages 78 to 80. In order to ensure reliability and efficiency, the V-flat belt drive must fulfil the following requirements:

- The V-grooved pulley must always be the small pulley.
- When using single belts, only classical V-belts sections Z/10, A/13, B/17, C/22, D/32, E/40 must be used.
- Wedge belts must never be used as their narrow base and larger relative height tends to make them turn on their sides and twist.
- All Optibelt KB Kraftbands – both with wedge belts or classical V-belts – are particularly suitable for this type of drive due to their single-belt-characteristic. Turning over even under extreme shock load conditions is prevented.
- V-flat drives are particularly economical when

$$kf = \frac{D_a - d_d}{a} \text{ lies between 0.5 and 1.15}$$

The ideal drive dimensioning is achieved when kf = 0.85. If the kf-factor falls outside the recommended range, it is more economic to specify a normal V-belt drive.

- The following recommendations are made based on the above requirements:

| | Classiscal V-belts | Kraftbands |
|---|---|---|
| Ratio | $i = \frac{D_a + D_Z}{d_d} \geq 3$ | $i = \frac{D_a + D_Z}{d_a} \geq 3$ |
| Drive centre distance | $a_{zul} \geq D_a$ | $a_{zul} \geq D_a$ |
| | $a = \frac{D_a - d_d}{0.85}$ | $a = \frac{D_a - d_a}{0.85}$ |
| K factor | $kf = \frac{D_a - d_d}{a}$ | $kf = \frac{D_a - d_a}{a}$ |
| | $0.5 \leq kf_{zul} \leq 1.15$ | |

- When calculating the number of belts and the belt tension, it should be noted that a special arc of contact factor c1 must be used as shown in the following table.

*Table 55: Arc of contact factor $c_1$ (for V-flat belt drives only)*

| $kf = \frac{D_a - d_d}{a}$ | β = | $c_1$ |
|---|---|---|
| 0 | 180° | 0.75 |
| 0.07 | 176° | 0.76 |
| 0.15 | 170° | 0.77 |
| 0.22 | 167° | 0.79 |
| 0.29 | 163° | 0.79 |
| 0.35 | 163° | 0.79 |
| 0.40 | 156° | 0.81 |
| 0.45 | 153° | 0.81 |
| 0.50 | 150° | 0.82 |
| 0.57 | 146° | 0.83 |
| 0.64 | 143° | 0.84 |
| 0.70 | 140° | 0.85 |
| 0.75 | 137° | 0.85 |
| 0.80 | 134° | 0.86 |
| 0.85 | 130° | 0.86 |
| 0.92 | 125° | 0.84 |
| 1.00 | 120° | 0.82 |
| 1.07 | 115° | 0.80 |
| 1.15 | 110° | 0.78 |
| 1.21 | 106° | 0.77 |
| 1.30 | 100° | 0.73 |
| 1.36 | 96° | 0.72 |
| 1.45 | 90° | 0.70 |

- For classical V-belts, the length is calculated using the datum length Ld and for Kraftbands using the outside length La. Therefore, the correction factor $D_z$ must be added to the outside diameter of the flat pulley in order to arrive at the theoretical design diameter.

### Correction Factor $D_z$ for Determination of the Theoretical Design Diameter

Classical V-belts

| Section | Z/10 | A/13 | B/17 | C/22 | D/32 | E/40 |
|---|---|---|---|---|---|---|
| $D_Z$ (mm) | 7 | 10 | 13 | 18 | 23 | 25 |

Kraftbands

| Section | 3V/ 9J | 5V/ 15J | 8V/ 25J | SPZ | SPA | SPB | SPC | A/ HA | B/ HB | C/ HC | D/ HD |
|---|---|---|---|---|---|---|---|---|---|---|---|
| $D_Z$ (mm) | 13 | 23 | 41 | 12 | 15 | 19 | 26 | 12 | 20 | 24 | 35 |

### Calculating the Datum Length for Classical V-Belts

$$L_{dth} \quad 2a + 1.57\,(d_d + D_a + D_Z) + \frac{(D_a + D_Z - d_d)^2}{4\,a}$$

### Calculating the Outside Length for Kraftbands

$$L_{ath} \approx 2a + 1.57\,(d_a + D_a + D_Z) + \frac{(D_a + D_Z - d_a)^2}{4\,a}$$

Length conversion factors are given on pages 145/146. Datum length Ld = datum length $L_w$.

# Special Drives
## V-Flat Drives

- The flat pulley should be cylindrical in shape. With existing flat pulleys that are to be re-used for a V-flat belt drive, the height of the crown should be checked.

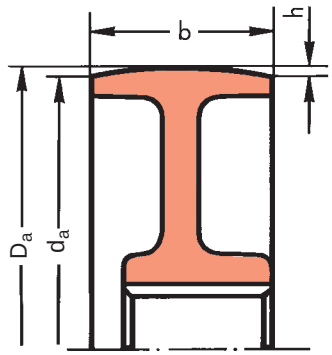


The following conditions must be met:

**Maximum Crown Height**

$h_{max}$ = 1 mm pro 100 mm pulley face width

$$h = \frac{D_a - d_a}{2} \qquad (h < h_{max})$$

In addition, the pulley face width must be calculated or checked as shown in the following example:

Given / calculated:

| | |
|---|---|
| V-Grooved pulley | 6 grooves |
| Section | B / 17 |
| Drive centre distance a | 850 mm |

Solution:
$b = b_2 + f$
$b = 120 + 35 =$ **155 mm**

$b_2$ for classical V-belts, page 41, table 8
$b_2$ for Kraftbands, page 45, table 14
f from table 56.

Choose a standard flat pulley with face width b = **160 mm.**

*Table 56: Factor f for determining the face width of the flat pulley*

| Z / 10, SPZ, A / 13 / HA, 3V / 9J | | SPB 5V / 15J | | C / 22 / HC, SPC | | D / 32 / HD, 8V / 25J | | E / 40 | |
|---|---|---|---|---|---|---|---|---|---|
| a | f | a | f | a | f | a | f | a | f |
| < 500 | 20 | < 750 | 25 | < 1000 | 30 | < 1250 | 40 | < 1750 | 45 |
| 500-750 | 25 | 750-1000 | 35 | 1000-1250 | 40 | 1250-1750 | 50 | 1750-2250 | 60 |
| > 750 | 30 | > 1000 | 40 | > 1250 | 50 | > 1750 | 65 | > 2250 | 75 |

**Calculation of the specific surface pressurepulley**

**Calculation the effective belt tension $S_n$ (N)**

$$S_n = \frac{P \cdot 1000}{v}$$

**Surface pressure on flat pulley $p_f$ (N / cm²)***

$$p_f = \frac{S_n}{F_l}$$

**Area of belt contact on flat pulley $F_l$ (cm²)**

$$F_l = \frac{D_a \cdot \pi \cdot \alpha \cdot b_u \cdot z}{36\,000}$$

**Recommended surface pressure $p_f$ (N / cm²)***

$p_f \leq 4$ N / cm²*

Formula:

**Calculating the static belt tension for V-flat belt drives T (N)**

$$T = \frac{500 \cdot (2.25 - c_1) \cdot P_B}{c_1 \cdot z \cdot v} + k \cdot v^2$$

* 10 N / cm² = 1 bar = $10^5$ Pascal

**In addition to the calculation method set out on pages 78 to 80, the static belt tension for V-flat belt drives must be calculated according to the formulae shown here.**

# Special Drives
## Tension / Guide Idlers

Idlers are grooved or flat pulleys that do not transmit any power in a drive system. As they also generate additional bending stresses in the belt, they should be employed sparingly and, where possible, confined to the following situations:

- with fixed drive centres, in order to produce the required tension and to take up the maximum possible belt stretch and wear
- as damping and guide idlers on very long, unsupported spans. Belts on such drives tend to vibrate more than normal and even to turn over in the pulley grooves
- as outside idlers where the arc of contact on one of the loaded pulleys is too low. Their inclusion increases the arc of contact and often reduces excessive slip or eliminates the need to increase the number of belts,
- as guide idlers on drives where the pulleys are not all on the same plane such as quarter turn drives
- to guide belts past obstructions,
- as pneumatically, hydraulically or spring loaded idlers to maintain an even, constant tension.
- as clutching idlers with which the driven pulley can be engaged or disengaged. Complex clutches are no longer required. Because of their single belt characteristics, Optibelt KB Kraftbands are particularly suited to these applications.

If, for the reasons listed above, it is absolutely essential to employ idlers, the following criteria must be observed when designing the drive:

- idler configuration,
- position of the idler in the belt span,
- idler diameter,
- idler shape,
- allowance for idler travel for fitting and for initial and subsequent tensioning of the belt,
- correction of the power rating $P_N$

### Idler Configuration

In principle, idlers can be used internally or externally depending upon the drive situation.

Unless design requirements call for an outside idler, the inside idler is usually more advantageous. Its diameter can be kept smaller than that of the outside idler.

Depending upon the type of belt, **inside idlers** can either take the form of a grooved or flat pulley.

*Table 57: Section dimensions*

| Belt type | Grooved pulley | Flat pulley |
|---|---|---|
| High-performance wedge belts DIN 7753 Part 1 SPZ; SPA; SPB; SPC | ● | |
| High-performance wedge belts USA Standard RMA/MPTA 3V/9N; 5V/15N; 8V/25N | ● | |
| Classical V-belts DIN 2215 Z/10; A/13; B/17; 20; C/22; 25; D/32; E/40 | ● | ● |
| Kraftbands with high-performance wedge belts 3V/9J; 5V/15J; 8V/25J; SPA; SPZ; SPB; SPC | ● | ● |
| Kraftbands with classical V-belts A/HA; B/HB; C/HC; D/HD | ● | ● |

For raw-edge V-belts and Kraftbands the same requirements as in table 57 are valid.

Inside idlers reduce the arc of contact on the loaded pulleys and with it the arc of contact correction factor c1. When calculating the number of belts, the arc of contact correction factor should be selected for the position of the idler at the point of maximum belt stretch (See Table 58, page 116).

**Outside idlers** must always take the form of flat pulleys as they run on the back of the belt. They increase the arc of contact. Care must be taken to ensure however that the maximum possible belt stretch is taken up and that contact with the opposite span is prevented. The reverse bending caused when outside idlers are used can lead to a reduction of the belt service life.

Special V-belt constructions upon request!

# Special Drives
## Tension / Guide Idlers

### Position of the Idler in the Belt Span

Theoretical power transmission formulae and indeed practice has shown that idlers should, wherever possible, be placed in the slack side of the drive. The tension idler force can then be very significantly reduced. A spring loaded idler must not be employed in a reversing drive as the slack and tight sides of the drive are constantly changing.

Our Applications Engineering Department will be pleased to assist in the design where spring loaded idlers present special problems.

*Fig. 1*

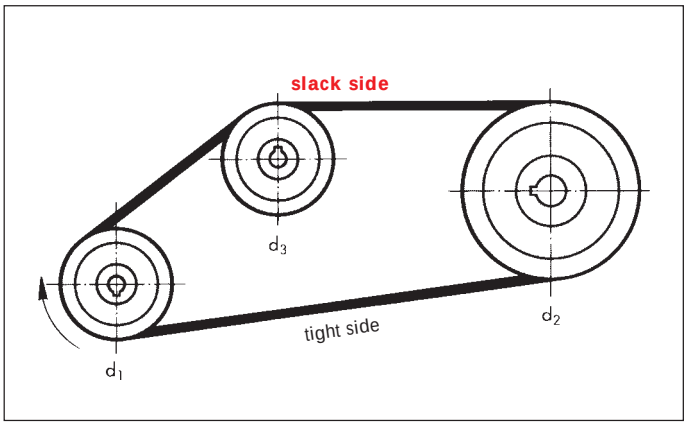


Grooved pulleys can be used as inside idlers anywhere on the slack side. Where possible, however, the arc of contact should be the same on both pulleys when the idler reaches its limit position, i.e. belt stretch is at its maximum.

*Fig. 2*

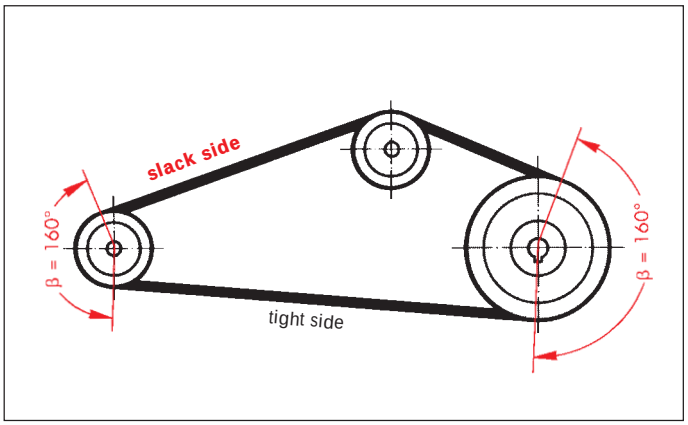


Flat pulleys, whether used as inside or outside idlers, are to be placed as far as possible away from the grooved pulley on to which the belt runs next. Any alignment errors between the idler and the pulley and the resultant sideways movement of the belt on the pulley are thus avoided.

*Fig. 3*

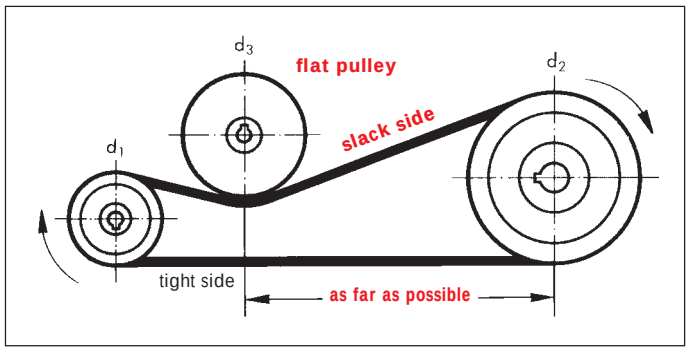


On drives with long belt spans grooved pulleys are the preferred choice for inside idlers because with flat pulleys transverse vibrations and belt turnover can occur.

### Minimum Diameter for Inside Idlers

Inside idler ≥ smallest loaded pulley in the drive system or smallest permissible pulley diameter for the section used.

### Minimum Diameter for Outside Idlers

Outside idler ≥ 1.35 times the smallest loaded pulley in the drive system.

Exceptions:

| Section | Diameter of the smallest loaded pulley in the drive (mm) | Minimum diameter of the outside idler (mm) |
|---|---|---|
| **Z/10** | 56 – 63 | 90 |
| **A/13** | 71 – 90 | 125 |
| **SPZ, 3V/9N** | 63 – 90 | 125 |
| **SPA** | 90 – 112 | 150 |

The belt service life is significantly reduced if the minimum recommended idler diameter is less than the size recommended.

### Idler Design

Grooved pulleys which are used as idlers can normally have standard groove dimensions. On drives subject to severe vibration and with long drive centre distances, it is recommended that deep grooved pulleys be employed.

Flat pulleys should, where possible, be cylindrical and not crowned. Flanged pulleys are recommended as belt guides. The corners formed by the contact surface and pulley flange should be sharp. Round edges encourage the belt to run up on the flanges causing turn over.

# Special Drives
## Tension / Guide Idlers

The face width or the contact surface between the two flanges is calculated as follows:

$$b = b_2 + m$$

b = face width / contact surface (mm)
$b_2$ = face width of the grooved pulley (mm)
m = additional value (mm)

| Section | Additional value m (mm) |
|---|---|
| SPZ, 3V/9N, Z/10 | 15 |
| SPA, A/13 | 20 |
| SPB, 5V/15N, B/17 | 25 |
| SPC, C/22 | 30 |
| 8V/25N | 35 |
| D/32 | 40 |
| E/40 | 45 |
| also applies for raw edge V-belts | |

### Drive Calculation

Calculating the length and determining the number of belts is basically the same as for two pulley drives. Certain details are, however, to be noted:

1. Calculate the belt length over two pulleys using the formula: see notes on standards page 66, 152/153.

$$L_{dth} \approx 2a + 1.57\,(d_{dg} + d_{dk}) + \frac{(d_{dg} - d_{dk})^2}{4a}$$

2. If the belt has to be fitted with a fixed drive centre distance, double the adjustment "**y**" must be added to the belt length $L_{dth}$ (see pages 75/ 76).

$$L_d = L_{dth} + 2\,y$$

3. The next largest standard length $L_{dSt}$ should then be selected. A check should be made, usually on the drawing, to determine whether the belt can be adequately tensioned with the idler in the outermost position. In this idler position, both the standard length $L_{dSt}$ and double the adjustment "**x**" must be taken up (see pages 75/76).

$$L_d \text{ for idler end position} = L_{dSt} + 2\,x$$

*Fig. 4*

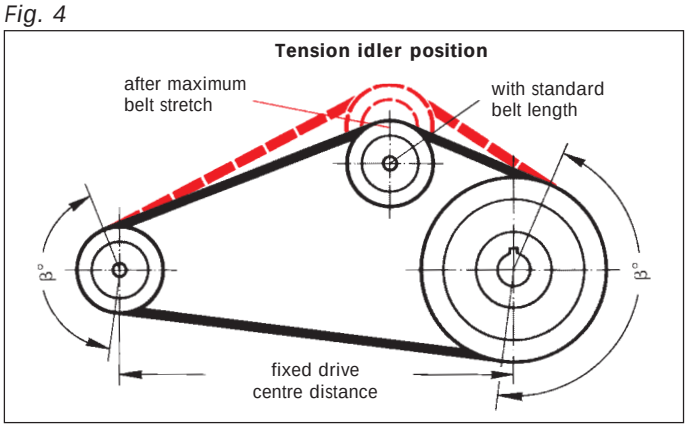


### Number of Belts

The application of idlers increases the bending stress in the belts. To avoid a reduction in belt service life, the idler correction factor $c_4$ must also be included in the calculation. This correction factor takes the number of idlers into consideration whilst maintaining the minimum diameter.

*Table 58*

| Number of idlers | $c_4$ |
|---|---|
| 0 | 1.00 |
| 1 | 0.91 |
| 2 | 0.86 |
| 3 | 0.81 |

The nominal power rating $P_N$ per belt is, as before, based on the smallest loaded pulley. Calculation of the arc of contact correction factor $c_1$ must be based on the smallest contact angle of the loaded pulley which occurs when the belt is stretched to its maximum limit.

*Table 59: Arc of contact correction factor $c_1$*

| β = | $c_1$ | β = | $c_1$ |
|---|---|---|---|
| 75° | 0.82 | 175° | 1.00 |
| 80° | 0.84 | 180° | 1.00 |
| 85° | 0.86 | 185° | 1.00 |
| 90° | 0.88 | 190° | 1.00 |
| 95° | 0.90 | 195° | 1.01 |
| 100° | 0.91 | 200° | 1.01 |
| 105° | 0.92 | 205° | 1.01 |
| 110° | 0.93 | 210° | 1.01 |
| 115° | 0.94 | 215° | 1.01 |
| 120° | 0.95 | 220° | 1.01 |
| 125° | 0.96 | 225° | 1.01 |
| 130° | 0.96 | 230° | 1.01 |
| 135° | 0.97 | 240° | 1.02 |
| 140° | 0.97 | 250° | 1.02 |
| 145° | 0.98 | | |
| 150° | 0.98 | | |
| 155° | 0.99 | | |
| 160° | 0.99 | | |
| 165° | 0.99 | | |
| 170° | 1.00 | | |

The following formula for determining the number of belts is obtained using the idler correction factor $c_4$:

$$z = \frac{P \cdot c_2}{P_N \cdot c_1 \cdot c_3 \cdot c_4}$$

# Special Drives
## Twist Drives

Drives in which the belt run is transposed are often simply termed "twist" drives. These can be drives where the shafts are not parallel, whose pulleys and idlers are not all arranged on one plane, or drives with two parallel but counter rotating shafts. Because of the twisting of the belt, this type of drive requires a certain degree of lateral bending flexibility. The cross section of the V-belt is better suited for this purpose than the flat belt. In most applications twist drives use only single V-belts, but drives using belt sets are possible. The crossing of the belt spans and the non-aligned entry of the belt into the pulley leads to a reduction of the belt service life. The entry and exit angle between the belt and the pulley plane should not be more than 5°. The required inclination of the shafts and the pulleys relative to each other and the belt entry and exit angles should be confirmed by practical tests. In addition, certain critical drives may have a considerably improved safety factor if Optibelt special constructions are used.

The most important types of twist drives and the associated design guidelines are illustrated in the following text.

### Quarter Twist Drive

The term quarter twist drive is used to describe systems where the shafts are at a 90° angle to each other.

The ratio i or 1:i on quarter twist drives should not be greater than 2.5.

Where this is not possible, a two stage drive should be employed, in which one stage takes the form of a standard V-belt drive.

### Quarter Twist Drive Ratio i or 1:i < 2.5

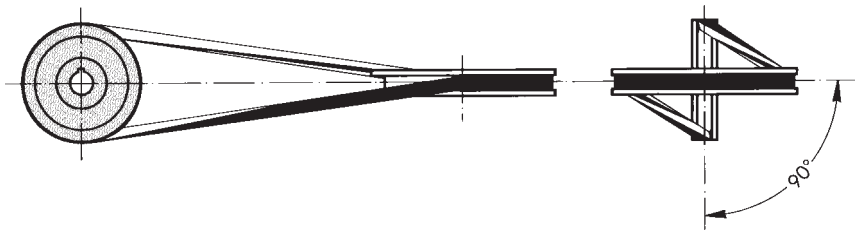


### Quarter Twist Drive Ratio i or 1:i > 2.5

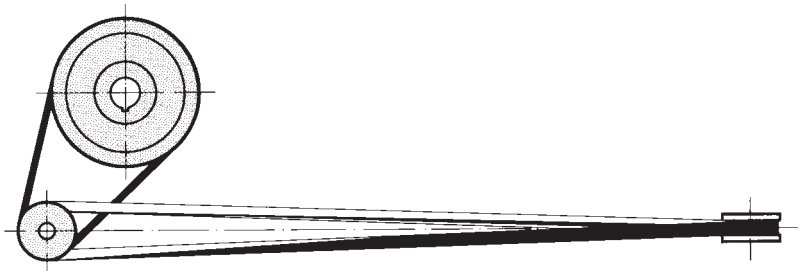

# Special Drives
## Twist Drives

### Design guidelines for quarter twist drives

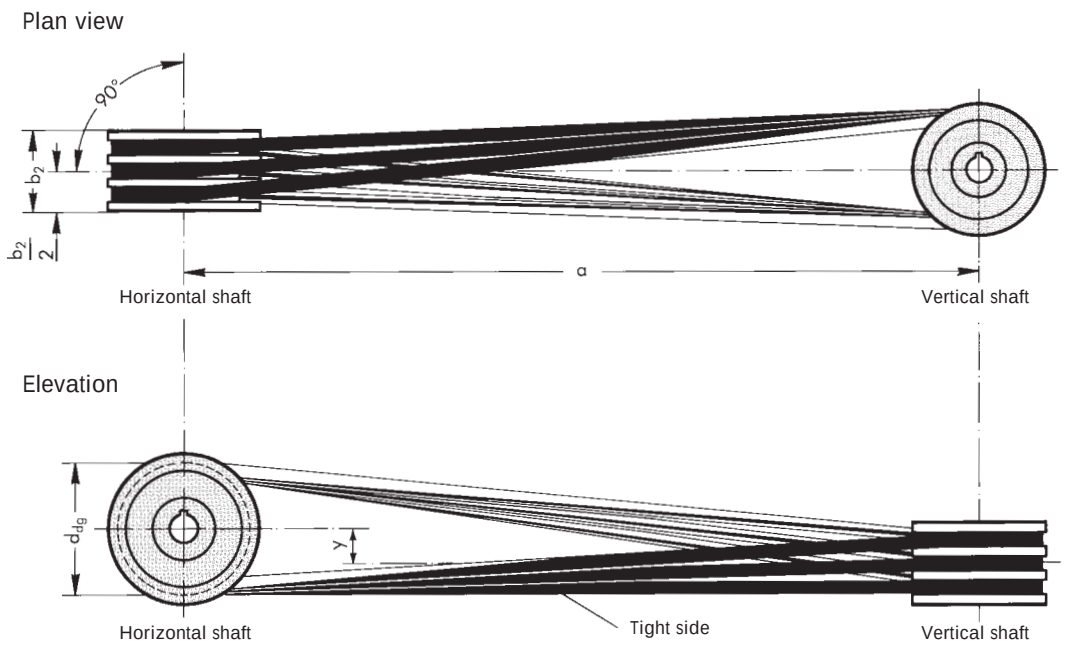


1. $a_{min} = 5.5\ (d_{dg} + b_2)$

2. The drive must be aligned so that a straight line drawn through the centre of the vertical shaft runs through the centre of the face $b_2$ of the pulley on the horizontal shaft (plan). The horizontal shaft must be at right angles to this straight line.

3. The horizontal centre line of the pulley on the horizontal shaft must be above and at a distance $y_1$ from the centre line of the pulley on the vertical shaft (elevation). The distance $y_1$ changes with the drive centre distance 'a'.

*Table 60*

| Drive centre distance a (mm) | $y_1$ (mm) Classical V-belts | $y_1$ (mm) Wedge belts |
|---|---|---|
| 1200 ≤ 1500 | 5 | – |
| > 1500 ≤ 2000 | 8 | 5 |
| > 2000 ≤ 2500 | 12 | 8 |
| > 2500 ≤ 3000 | 17 | 10 |
| > 3000 ≤ 3500 | 25 | 15 |
| > 3500 ≤ 4000 | 35 | 25 |
| > 4000 ≤ 4500 | 45 | 30 |
| > 4500 ≤ 5000 | 55 | 40 |
| > 5000 ≤ 5500 | 65 | 45 |
| > 5500 ≤ 6000 | 80 | 55 |
| > 6000 | 100 | 65 |

4. The direction of rotation must be arranged so that the tight side $S_1$ is at the bottom.

5. Deep grooved pulleys should be specified where possible for single belt drives. This ensures an improved entry and exit of the belt, thus preventing turnover.

6. Never specify deep grooved pulleys when using Kraftbands. Kraftband pulleys should always be used. We recommend, in any case, that our Applications Department be consulted.

7. When calculating the number of belts, the example given on pages 78 to 80 should be followed. An arc of contact correction factor $c_1 = 1$ must always be used.

8. The static belt tension 'T' should be calculated using the formula on page 113.

9. The drive centre distance must be adjustable so that the belt can be fitted without force, the necessary tension applied, and the belt stretch and wear taken up during its service life.

# Special Drives
## Twist Drives

### Eighth twist drives

Eighth twist drives are seldom required. The shafts in this drive system are at an angle of 45° relative to each other.

### Design guidelines

1. $a_{min} = 4\ (d_{dg} + b_2)$
2. Otherwise the design guidelines for quarter twist drives are applicable.

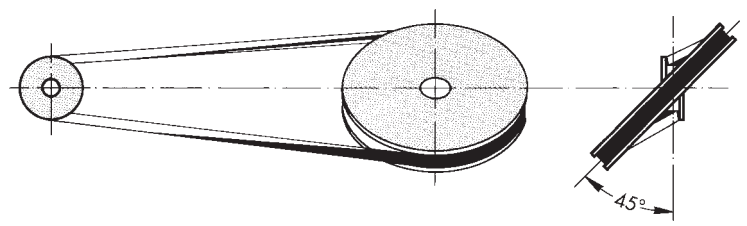


### Drives with 180° twist

The drive and the driven shafts are, as with conventional drives, parallel to each other. The belt is twisted through 180° so that both spans cross. A change in direction is thus achieved at very little cost.

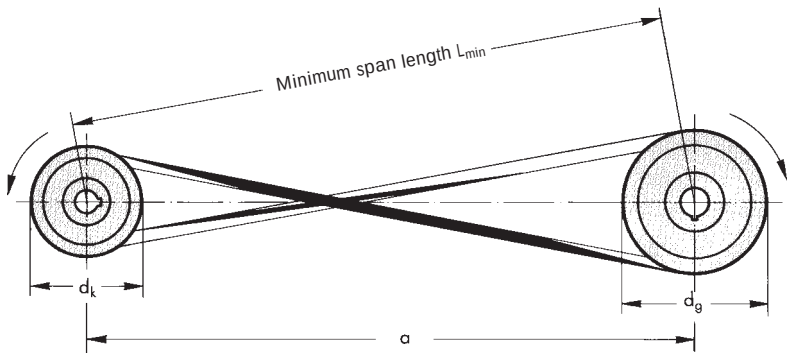


### Design guidelines

1. In order to guarantee the perfect running of the belts in the pulley grooves, the belt span length used must not be less than the minimum set out in the following table.

*Table 61*

| Section | Minimum span length $L_{min}$ (mm) |
|---|---|
| SPZ, 3V/9N | 350 |
| SPA | 400 |
| SPB, 5V/15N | 450 |
| SPC | 600 |
| 8V/25N | 700 |
| A/13 | 460 |
| B/17 | 560 |
| C/22 | 720 |
| D/32 | 940 |
| E/40 | 1150 |

2. As far as possible, the crossover point of the belt should be arranged in the centre of the belt spans. The rubbing of the belt spans against each other is at a minimum at this point. In order to avoid contact completely, it is recommended that a guide pulley be placed in the slack side $S_2$ near the crossover point.
3. Length calculation

$$L \approx 2a + 1{,}57\ (d_g + d_k) + \frac{(d_g + d_k)^2}{4\ a}$$

4. Otherwise the design guidelines as detailed in points 4 to 9 for quarter twist drives are applicable.

◀ these values also apply for raw edge belts

# Special Drives

## optibelt Drive Belts with Aramid Tension Cord

Aramid is an organic polyamide fibre that is manufactured by a complex chemical process. It is to be used wherever maximum stress and reliability is required. The processing of this fibre requires the highest level of experience and know-how as well as sophisticated testing facilities. Aramid is used as the tension cord material for highly loaded V-belts and Kraftbands.

### Construction and Properties

Compared to materials customarily used for tension cords e.g. polyesters, Aramid is noted for its extremely low stretch properties. Its tensile strength is almost double that for the same thickness of standard fibre.

| | Tensile strength (cN / tex) | Total extension at fracture (%) | Tension 2% (cN / tex) |
|---|---|---|---|
| Polyester | 81 | 14 | 15 |
| Aramid | 190 | 4 | 73 |

cN = centiNewton  Fibre weight: 1 tex = 1 g / 1000 m

Despite its extreme stability, this fibre is remarkably flexible and possesses sufficient elasticity to absorb shock loading or vibration.

These properties, which are of special importance for V-belts and Kraftbands, result in huge improvements in comparison to conventional constructions.

Optibelt V-belts in Aramid cord construction comprise:

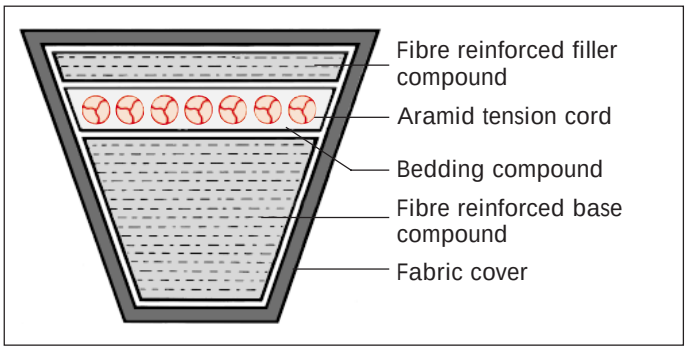


The high grade, specially processed Aramid tension cord is embedded in a rubber compound. It is effectively supported by a filler and base of polychloroprene and natural rubber compounds containing transversely arranged fibres. The fabric cover is treated on both sides with a rubber compound and completely envelops the V-belt.

### Applications

The advantages of Optibelt V-belts and Kraftbands that use Aramid tension cords are of special benefit where

- high power transmission levels are called for
- there are limitations on the drive width
- tthe adjustment available for tensioning is minimal
- the drive is exposed to high temperatures.

Thus, with the same number of belts and unchanged drive parameters, significantly higher power levels can be transmitted without reducing the service life of the belts. Even drive designs that have previously had to be classified as critical may now be considered as risk free. Service factors are improved; minimal belt stretch results in virtually maintenance free running.

For these reasons that Optibelt V-belts and Kraftbands with Aramid tension cord are to be found on drives with exceptional loading requirements -

- on critical drives in industrial engineering applications,
- on special machines,
- on agricultural machinery and
- on horticultural machinery.

Optibelt drive belts using Aramid tension cords may reduce the costs of the total drive, as there is a saving in both weight and volume due to the reduced installation width. They are oil resistant, and heat resistant up to approx. 100 °C, and dust protected, as standard.

A discussion of all the relevant criteria would be beyond the scope of this manual. We therefore recommend that you contact our Applications Engineering Department to discuss your specific problems.

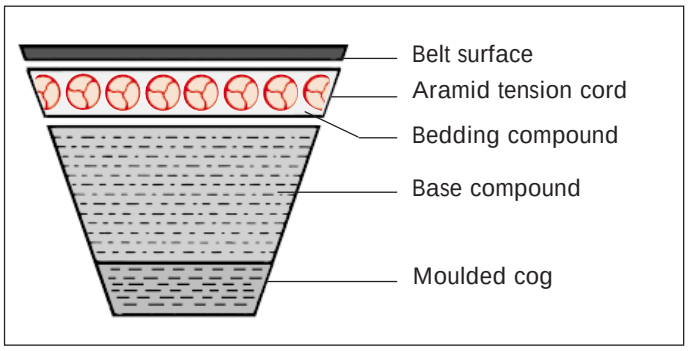


Special applications can also be designed with raw edge V-belts and Kraftbands employing Aramid tension cords.

### Drive Calculation

**Calculation must follow the example given on pages 78 to 80.**

Please ask for the details of the higher power ratings.

# Special Drives

## optibelt Drive Belts with Aramid Tension Cord

*Diagram 6*

**Time/extension graph** Belt size SPB 2000 $L_d$

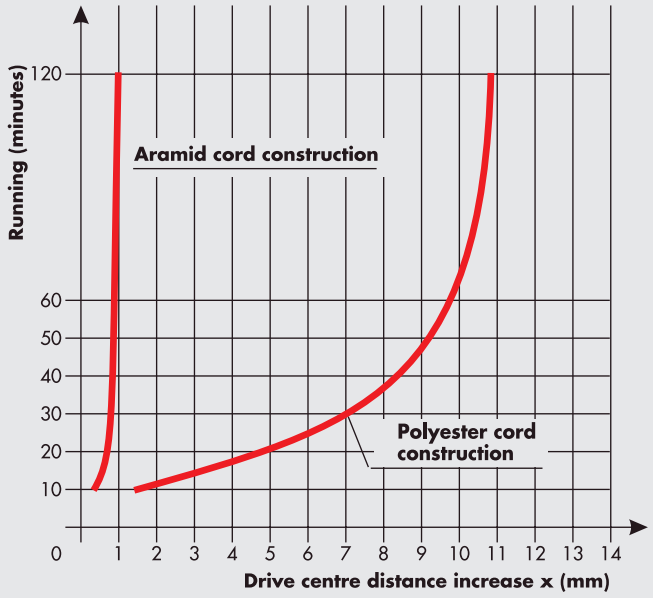


**Test arrangement**

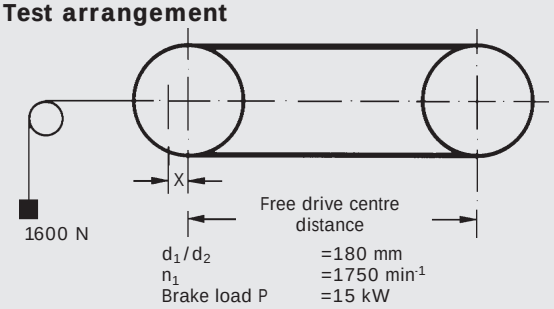


In this graph, the belt extension under load (drive centre distance increase) is plotted against time, for both materials. After only one hour, the increase with polyester is already several times that of Aramid.

*Diagram 7*

**Power rating graph** Belt size SPA 2500 $L_d$
Datum diameter of the small pulley $d_{dk}$ = 200 mm
Speed ratio i > 1.57

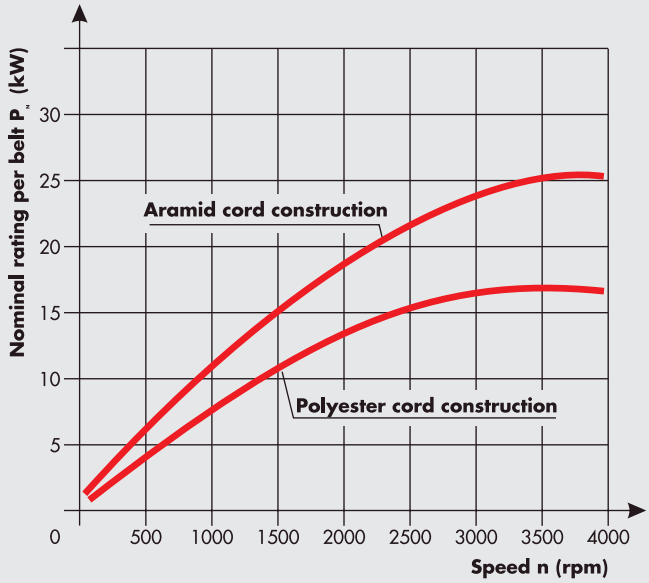


This diagram shows, in a direct comparison, the significantly higher power rating of the Optibelt V-belt with the Aramid cord construction.

### Sections / Lengths

Raw edge and wrapped Optibelt V-belts and Kraftbands are available with Aramid to BS/DIN/ISO and USA Standard RMA/MPTA.

Because of Aramid's special properties, belts for multi-grooved drives must be ordered in sets as the set tolerance is matched to the Aramid tension cord.

Lengths and minimum order quantities on request.

Datum length $L_d$ ≙ pitch length $L_w$; outside length = $L_a$

# Design Hints

## Belt Tension for optibelt V-Belts

The correct level of belt tension has a direct and crucial bearing on the trouble free transmission of power and the achievement of acceptable belt service life. Belt tension which is either too high or too low often results in premature failure. Belts which are over tensioned sometimes cause damage to the bearings on the driver or driven units.

Experience has shown that the more common tensioning methods, e.g. the "thumb pressure method" do not ensure tension settings that would enable drives to be operated at optimum efficiency, It is therefore recommended that the required static belt tension 'T' be calculated for each drive using the Optibelt formulae. This tension is the lowest possible required by a drive to transmit the highest power level from the drive, taking account of the normal amount of slip.

Once the belt has been fitted and the initial tension applied, it should be checked using an Optibelt tension gauge. The belt should be monitored regularly during the first few hours of operation experience has shown that the first retensioning should be undertaken after approximately 30 minutes to four hours running under full load. This takes up the initial belt stretch and "bedding in" to the pulley grooves.

After approximately 24 hours of operation, it is often advisable to check the drive and retension the belts if necessary, particularly when not continuously run under full load. The time between checks can then be significantly increased. Our installation and maintenance aids on page 130 - 132 should be observed.

An over or under tensioning of the drive will be avoided if the belt tension is calculated, set and checked using one of the following methods:

### I. Checking the Belt Tension by Span Deflection

This method provides an indirect measurement of the calculated or actual static belt tension. It is applicable for belt sections SPZ, SPA, SPB, SPC, 3V/9N, 5V/15N, Z/10, A/13, B/17, 20, C/22, 25, D/32, XPZ, XPA, XPB, XPC, 3VX, 5VX, ZX/X10, AX/X13, BX/X17, CX/X22.

| | | |
|---|---|---|
| E | = belt deflection per 100 mm span length | (mm) |
| $E_a$ | = belt deflection for a given span length | (mm) |
| f | = load used to set belt tension | (N) |
| k | = constant for calculation of centrifugal force | |
| L | = drive span length | (mm) |
| $S_a$ | = minimum static shaft load | (N) |
| T | = minimum static tension per belt | (N) |

1. Calculate the static belt tension using the following formula:

$$T \approx \frac{500 \cdot (2{,}02 - c_1) \cdot P_B}{c_1 \cdot z \cdot v} + k \cdot v^2$$

When first fitted, the belt should be tightened to 1.3 x T i.e 30% higher than the calculated belt tension.

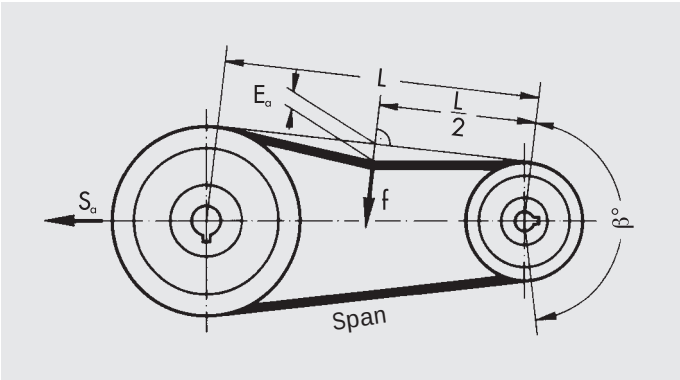


2. Determine the belt deflection per 100 mm span length E from the belt tension/deflection graphs Diagrams 8 to 11.

3. Calculate the belt deflection for a given span length $E_a$, for the actual drive span length

$$E_a \approx \frac{E \cdot L}{100}$$

$$L = a_{nom} \cdot \sin\frac{\beta}{2}$$

Apply the load to set belt tension T (taken from Diagrams 8 to 11 for the appropriate belt section) to the centre of, and perpendicular to, the span, as shown in the illustration above. Measure the deflection and if necessary adjust the centres until the correct belt tension is achieved.

### II. Checking Belt Tension by Speed Measurement

This method checks belt tension using the theoretical slip. The speeds of the driver and the driven pulleys are measured first in an unloaded condition and then under load.

| | | |
|---|---|---|
| S | = slip | (%) |
| $n_{1L}$ | = driver pulley speed, no load | (rpm) |
| $n_{2L}$ | = driven pulley speed, no load | (rpm) |
| $n_{1B}$ | = driver pulley speed, under load | (rpm) |
| $n_{2B}$ | = driven pulley speed, under load | (rpm) |

Formula for calculating the slip:

$$S = \left(1 - \frac{n_{1L}/n_{2L}}{n_{1B}/n_{2B}}\right) \cdot 100$$

At the rated loading, the slip should not exceed 1 %. The belt service life is considerably shortened due to excessive flank wear and over heating when tension is too low and slip ensues underload.

# Design Hints

## Belt Tension for optibelt V-Belts and Kraftbands

*Diagram 8: Belt tension graphs for Optibelt-SK wedge belts to BS 3790 and DIN 7753 Part 1*

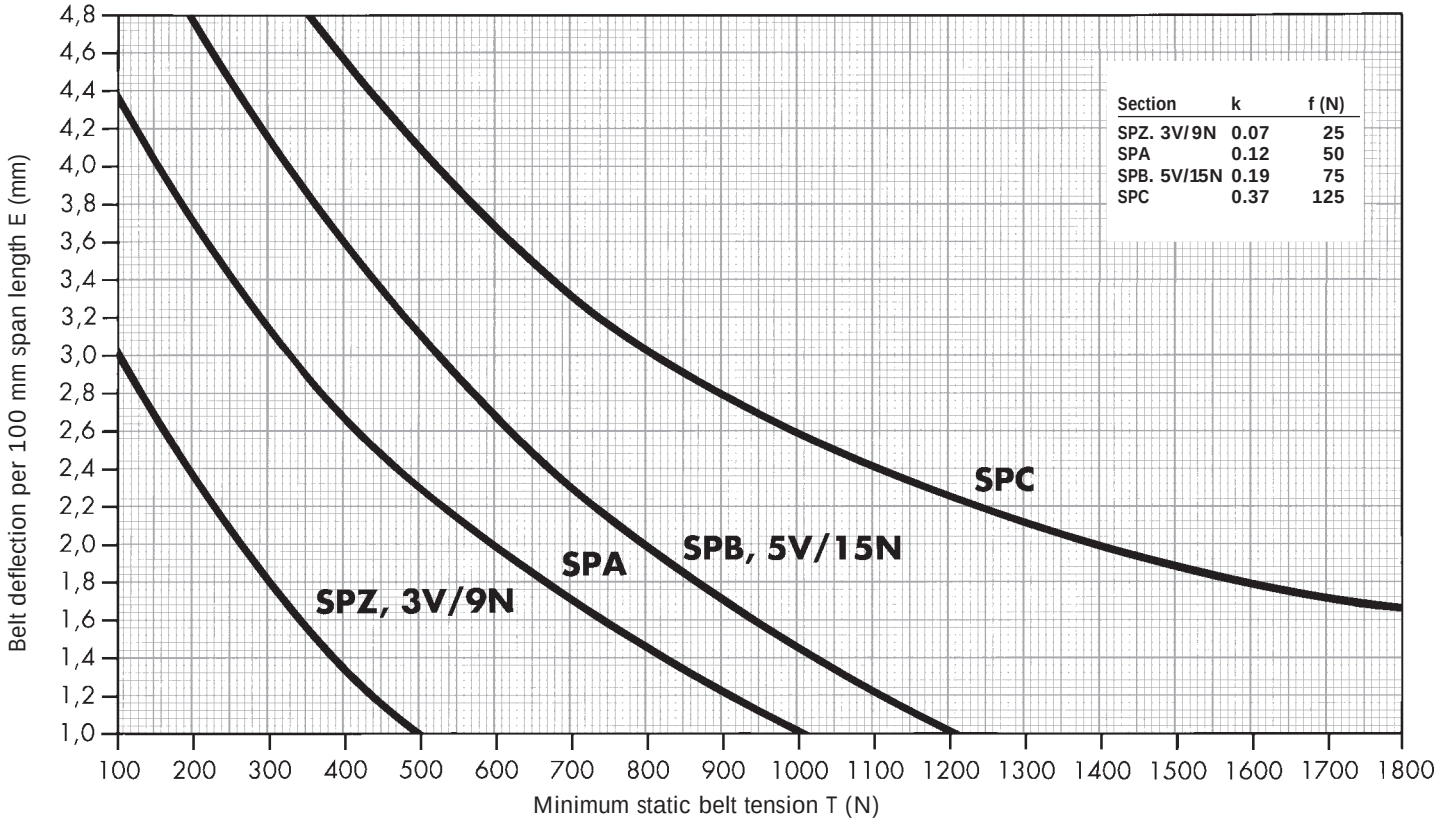


*Diagram 9: Belt tension graphs for Optibelt-VB classical V-belts to BS 3790 and DIN 2215*

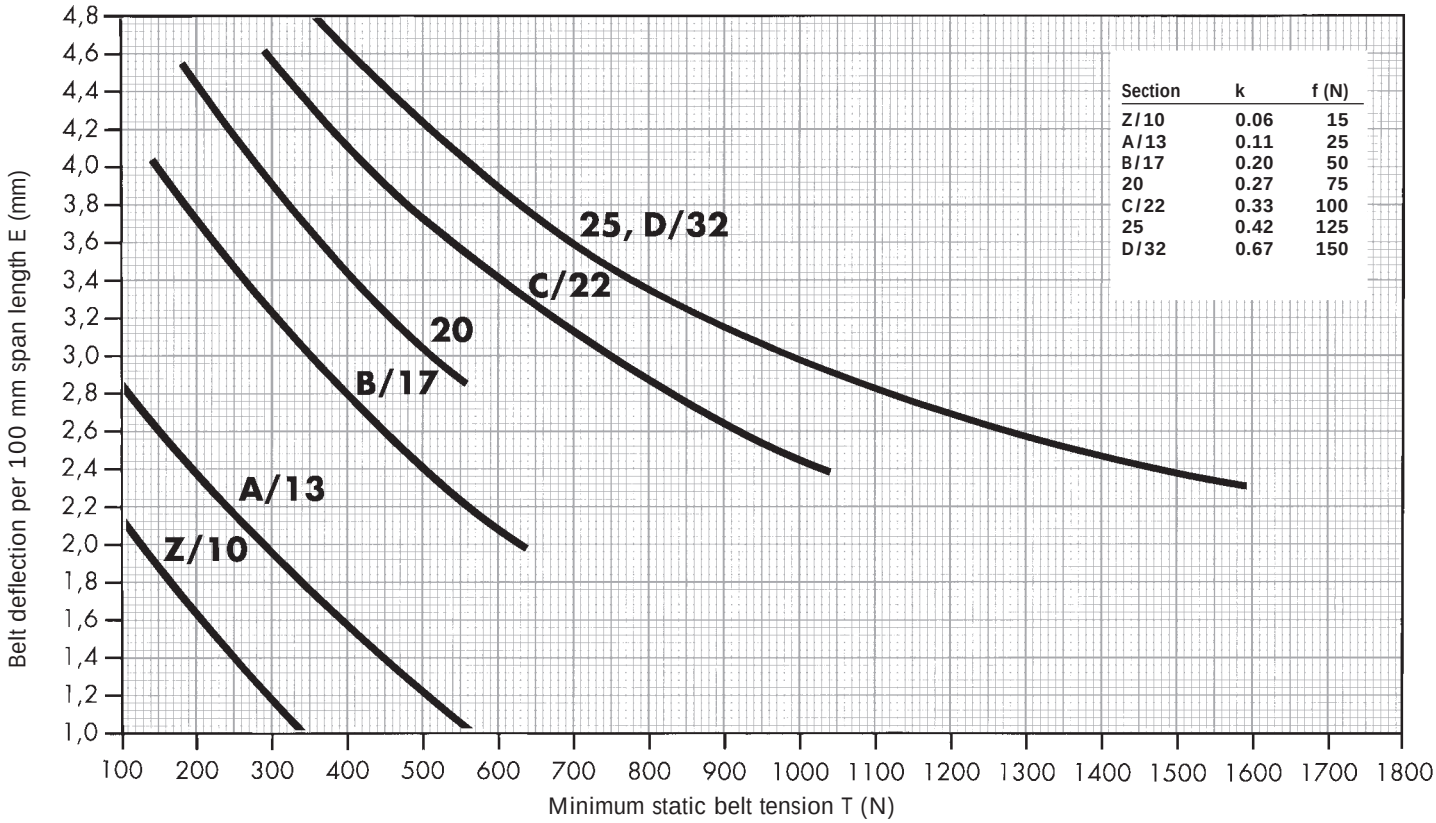

# Design Hints

## Belt Tension for optibelt V-Belts and Kraftbands

*Diagram 10: Belt tension graphs for Optibelt Super TX M=S wedge belts – raw edge, moulded cogged –*

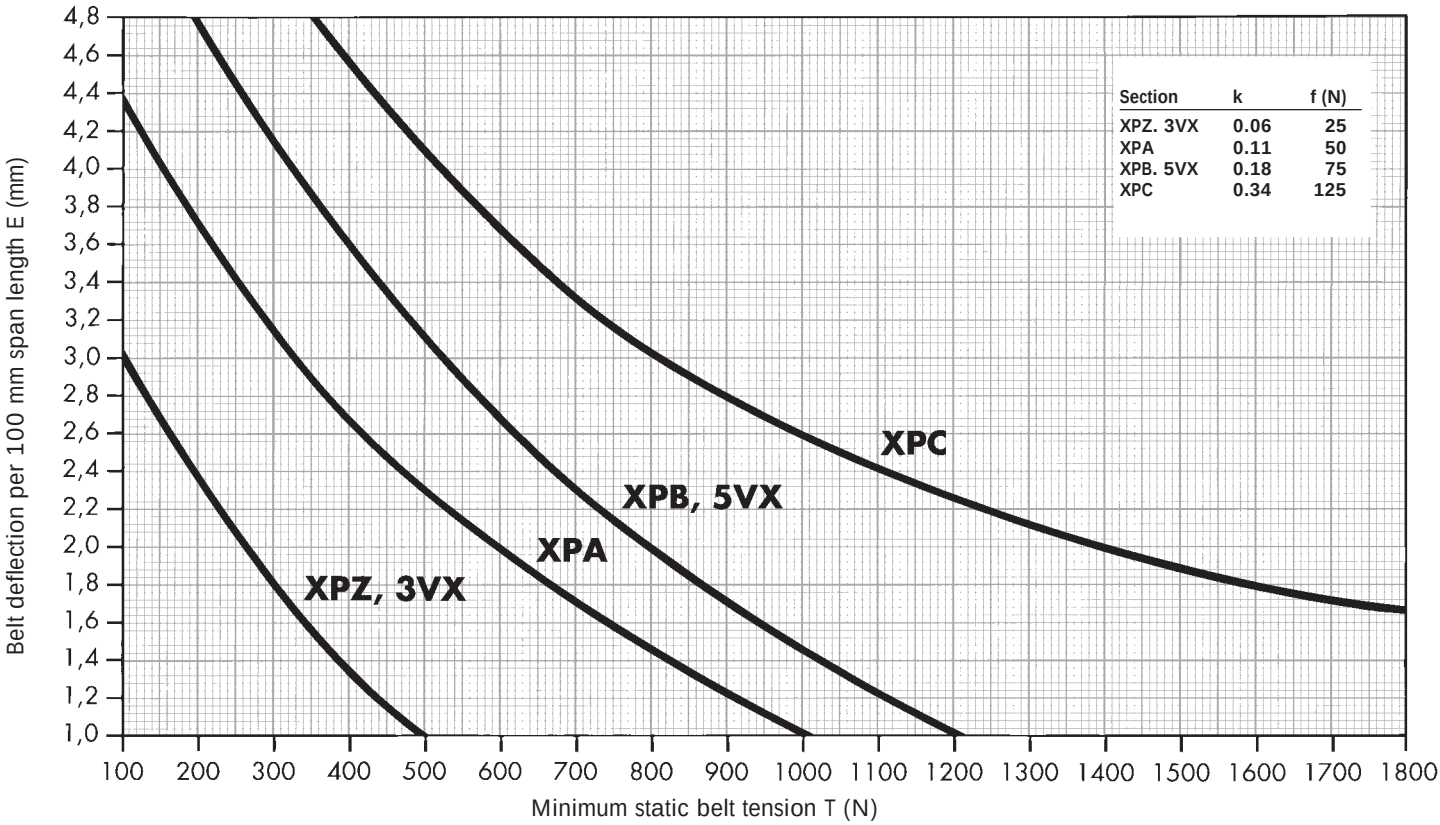


| Section | k | f (N) |
|---|---|---|
| XPZ. 3VX | 0.06 | 25 |
| XPA | 0.11 | 50 |
| XPB. 5VX | 0.18 | 75 |
| XPC | 0.34 | 125 |

*Diagram 11: Belt tension graphs for Optibelt Super TX M=S V-belts – raw edge, moulded cogged –*

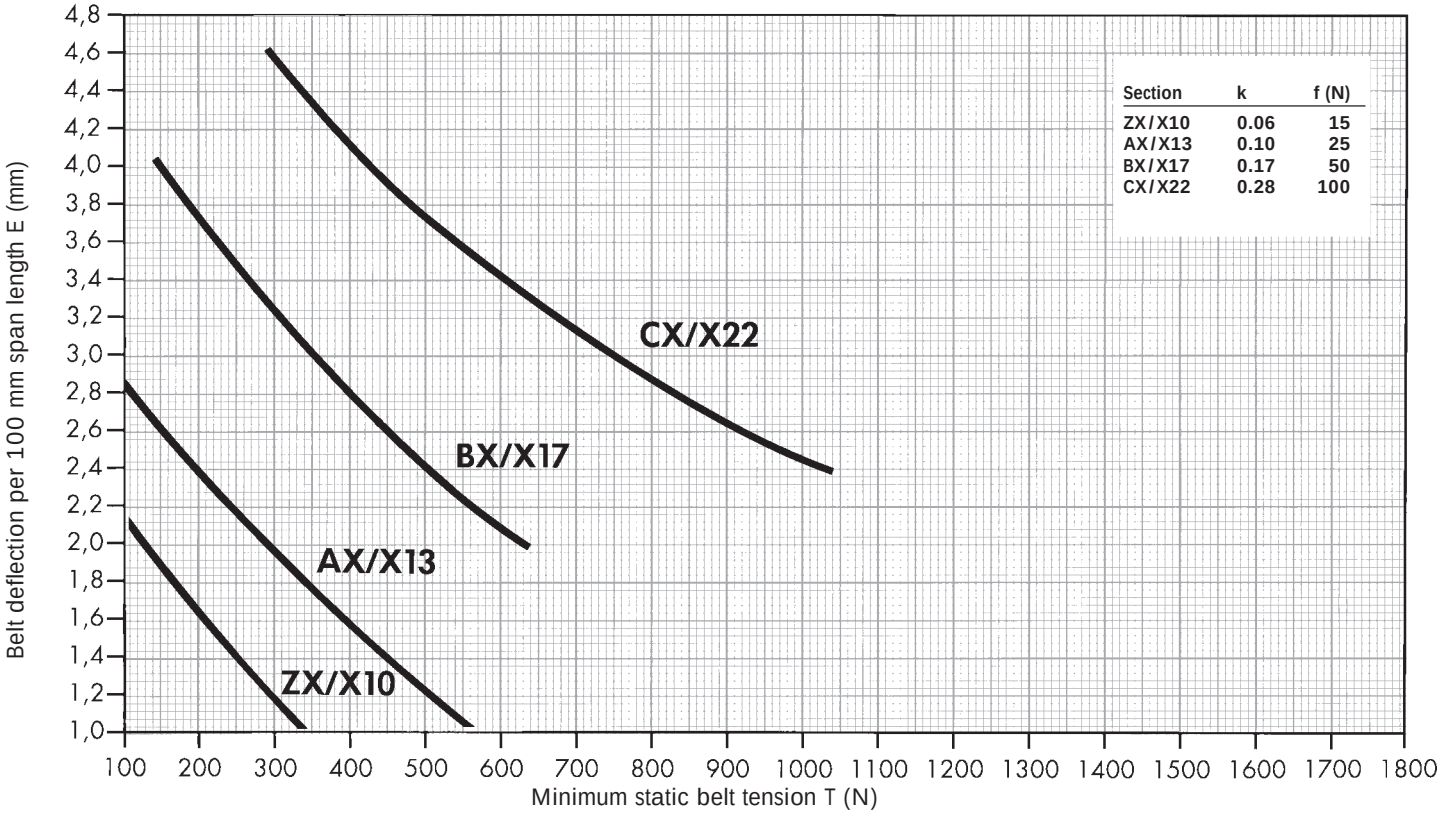


| Section | k | f (N) |
|---|---|---|
| ZX/X10 | 0.06 | 15 |
| AX/X13 | 0.10 | 25 |
| BX/X17 | 0.17 | 50 |
| CX/X22 | 0.28 | 100 |

# Design Hints

## Belt Tension for optibelt V-Belts and optibelt *KB* Kraftbands

### V. Belt Tensioning using a "Length Additional Value"

It has become evident that span deflection methods are not ideal for checking the tension of Kraftbands of all sections, and of individual belts. The following, very simple method for the setting and checking of belt tension is therefore recommended:

1. Calculate the static belt tension 'T'.

$$T \approx \frac{500 \cdot (2.02 - c_1) \cdot P_B}{c_1 \cdot z \cdot v} + k \cdot v^2$$

2. Measure the outside length "M" of the Kraftband or the single belt, whilst slack. The belt can be measured when fitted to the drive provided that it is completely **without** tension.

3. Procedure
   a) Fit the Kraftband or the single belt on to the pulleys. Provisionally tighten the belt in order to seat it into the pulley grooves.
   b) Next completely slacken the Kraftband or the single belt.
   c) Mark two lines on the top of the belt, distance 'M' apart. The lines must be marked on the free span length, not where the belt is on the pulleys ('M' should ideally be 1000 mm minimum or a multiple but in any case should be as long as possible).

   **Important:** The longer the measured section, the more accurate the tension setting will be.

4. Calculate the length additional value 'A' using the formula

$$A = \frac{M \cdot R}{1000}$$

R = stretch factor from Table 62, page 126

5. Tighten the Kraftband or the single belt until the distance 'M' is increased by the value 'A'. The drive will now be correctly tensioned.

6. If the drive is to be retensioned, the belt must first be slackened off again so that 'M' can be marked completely without tension. The procedure described under paragraphs 3. to 5. above must then be repeated.

Example:

$P_B$ = 1136 kW
$c_1$ = 0.97
v = 25.91 m/s

Drive arrangement with one set comprising:
2 Optibelt KB Kraftbands 4-8V 3750/25J 9525 $L_a$
2 Optibelt KB Kraftbands 5-8V 3750/25J 9525 $L_a$

$$T \approx \frac{500 \cdot (2.02 - 0.97) \cdot 1136}{0.97 \cdot 18 \cdot 25.91} + 0.69 \cdot 25.91^2 = \mathbf{1782\ N}$$

Where 'M' is 4000 mm

$$A = \frac{4000 \cdot 5{,}4}{1000} = 21.6 \text{ mm}$$

Tighten the Kraftband until the lines marked on the top surface are 'M' plus the length additional value apart. This will set the correct tension.

**When the belt is first installed the belt tension must be multiplied by 1.3.**

# Design Hints

## Belt Tension for optibelt V-Belts and optibelt KB Kraftbands

*Table 62: Length addition per 1000 mm belt length*

| Section | Kraftband | 3V/9J | 5V/15J | 8V/25J | SPZ | SPA | SPB | SPC | A/HA | B/HB | C/HC |
|---|---|---|---|---|---|---|---|---|---|---|---|
| | Single belt | 3V/9N | 5V/15N | 8V/25N | SPZ | SPA | SPB | SPC | A/13 | B/17 | C/22 |
| Minimum static belt tension per rib/single belt T (N) | | (mm) | (mm) | (mm) | (mm) | (mm) | (mm) | (mm) | (mm) | (mm) | (mm) |
| | 50 | 0.8 | | | 0.8 | 0.8 | | | 0.8 | | |
| | 75 | 1.2 | | | 1.2 | 1.0 | | | 1.0 | | |
| | 100 | 1.6 | | | 1.6 | 1.3 | | | 1.3 | | |
| | 125 | 2.1 | | | 2.1 | 1.6 | | | 1.6 | | |
| | 150 | 2.6 | | | 2.6 | 1.9 | | | 1.9 | 0.8 | |
| | 175 | 3.0 | | | 3.0 | 2.2 | | | 2.2 | 0.9 | |
| | 200 | 3.5 | | | 3.5 | 2.5 | | | 2.5 | 1.1 | |
| | 225 | 4.0 | | | 4.0 | 2.8 | | | 2.8 | 1.2 | |
| | 250 | 4.5 | | | 4.5 | 3.0 | | | 3.0 | 1.4 | |
| | 275 | 4.9 | | | 4.9 | 3.3 | | | 3.3 | 1.5 | |
| | 300 | 5.3 | 1.3 | | 5.3 | 3.6 | 1.3 | | 3.6 | 1.6 | 1.6 |
| | 350 | 6.4 | 1.7 | | 6.4 | 4.2 | 1.7 | | 4.2 | 1.8 | 1.8 |
| | 400 | 7.6 | 2.0 | | 7.6 | 4.7 | 2.0 | | 4.7 | 2.0 | 2.1 |
| | 450 | 8.7 | 2.4 | | 8.7 | 5.3 | 2.4 | | 5.3 | 2.2 | 2.3 |
| | 500 | 10.0 | 2.7 | | 10.0 | 5.8 | 2.7 | | 5.8 | 2.5 | 2.5 |
| | 550 | | 3.1 | | | | 3.1 | | | 2.7 | 2.7 |
| | 600 | | 3.4 | | | | 3.4 | 2.0 | | 3.0 | 2.9 |
| | 650 | | 3.8 | | | | 3.8 | 2.2 | | 3.2 | 3.1 |
| | 700 | | 4.1 | | | | 4.1 | 2.4 | | 3.5 | 3.4 |
| | 800 | | 4.8 | | | | 4.8 | 2.8 | | 4.2 | 3.8 |
| | 900 | | 5.5 | | | | 5.5 | 3.3 | | 4.8 | 4.2 |
| | 1000 | | 6.2 | | | | 6.2 | 3.7 | | 5.3 | 4.7 |
| | 1100 | | 6.9 | | | | 6.9 | 4.1 | | | 5.1 |
| | 1200 | | 7.6 | 2.9 | | | 7.6 | 4.5 | | | 5.5 |
| | 1300 | | 8.3 | 3.3 | | | 8.3 | 5.0 | | | |
| | 1400 | | 9.0 | 3.7 | | | 9.0 | 5.4 | | | |
| | 1500 | | 9.7 | 4.1 | | | 9.7 | 5.8 | | | |
| | 1600 | | 10.4 | 4.6 | | | 10.4 | 6.3 | | | |
| | 1700 | | 11.1 | 5.0 | | | 11.1 | 6.8 | | | |
| | 1800 | | 11.8 | 5.5 | | | 11.8 | 7.3 | | | |
| | 1900 | | | 6.0 | | | | 7.8 | | | |
| | 2000 | | | 6.5 | | | | 8.3 | | | |
| | 2100 | | | 7.0 | | | | 8.8 | | | |
| | 2200 | | | 7.5 | | | | 9.3 | | | |
| | 2300 | | | 8.0 | | | | 9.8 | | | |
| | 2400 | | | 8.6 | | | | | | | |
| | 2500 | | | 9.6 | | | | | | | |
| | 2600 | | | 10.6 | | | | | | | |
| | 2700 | | | 11.7 | | | | | | | |
| | 2800 | | | 12.8 | | | | | | | |
| | 2900 | | | 13.5 | | | | | | | |
| | 3000 | | | 14.2 | | | | | | | |
| | 3100 | | | 14.9 | | | | | | | |
| | 3200 | | | 15.6 | | | | | | | |
| | 3300 | | | 16.3 | | | | | | | |
| 'k' for Kraftbands | | 0.12 | 0.25 | 0.69 | 0.12 | 0.16 | 0.25 | 0.55 | 0.16 | 0.27 | 0.45 |
| 'k' for single belts | | 0.07 | 0.19 | 0.57 | 0.07 | 0.12 | 0.19 | 0.37 | 0.11 | 0.20 | 0.33 |

Intermediate values may be determined by linear interpolation.
The figures apply only for drives with grooved pulleys.
Values for V-flat drives can be provided upon request.

# Design Hints

## Calculating the Axial Force / Shaft Loading under Dynamic Conditions

With drives having electric motors as the prime movers, care should be taken to ensure that the dynamic loading can be safely accommodated by the motor shafts and bearings to which it is applied.

Experience has shown that drives on

- electric motors,
- internal combustion engines,
- turbines,
- and very heavy-duty drives such as stone crushers, calenders, and heavily loaded mills,

**call for the dynamic bearing load to be determined,** that is the shaft and bearing loads on both the driver and the driven shafts.

Exact calculation of the "dynamic axial force" saves the unnecessary expense of:

- premature bearing failure
- shaft failure or
- over designed bearings and shafts.

In the case of two pulley drives, the driver and driven shafts and the bearings are subjected to the same dynamic axial force, but in opposite directions. When idlers are employed, the magnitude and the direction of the axial force are almost always different on each pulley. If the magnitude and direction of the dynamic axial force is to be determined, a graphical solution, using a vector diagram for the dynamic forces in the tight side $S_1$ and the slack side $S_2$, is always recommended.

If only the magnitude of the dynamic axial force is to be determined, this can be achieved using the formula for "$S_{a\,dyn}$". Data from the calculation examples given on pages 59 to 61.

$P_B$ = 171.6 kW  $c_1$ = 1.00

v = 21.76 m/s  β = 170°

**Dynamic tight side tension**

$$S_1 \approx \frac{1020 \cdot P_B}{c_1 \cdot v}$$

$$S_1 \approx \frac{1020 \cdot 171{,}6}{1.0 \cdot 21.76} \approx \mathbf{8044\ N}$$

**Dynamic slack side tension**

$$S_2 \approx \frac{1000 \cdot (1.02 - c_1) \cdot P_B}{c_1 \cdot v}$$

$$S_2 \approx \frac{1000 \cdot (1.02 - 1.0) \cdot 171.6}{1.0 \cdot 21.76} \approx \mathbf{158\ N}$$

### A) Graphical solution

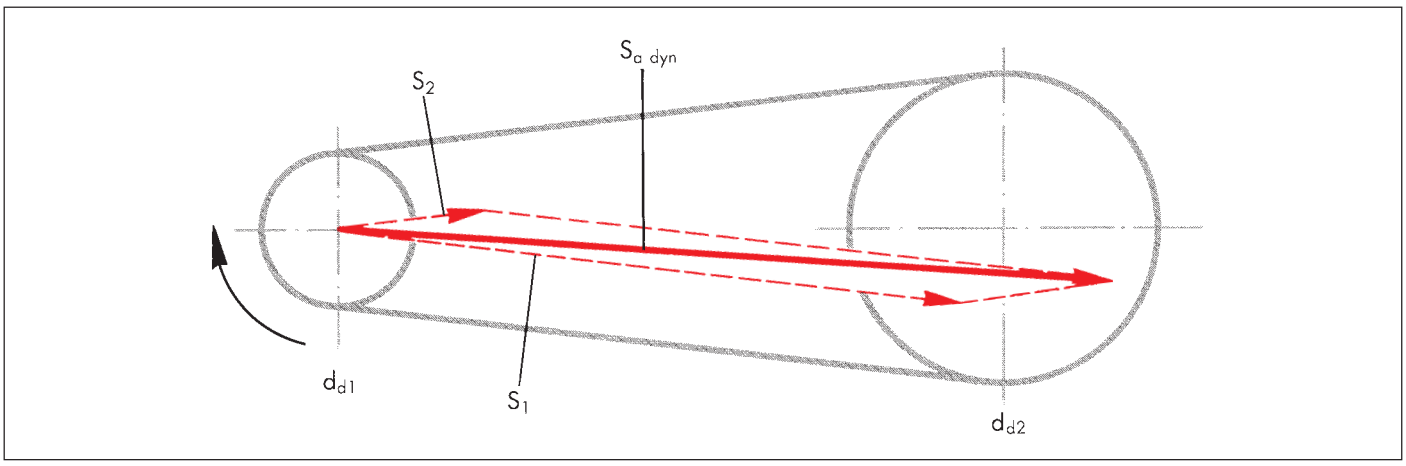


### B) Solution using the formula for $S_{a\,dyn}$

**Dynamic axial force**

$$S_{a\,dyn} \approx \sqrt{S_1^2 + S_2^2 - 2\,S_1 \cdot S_2 \cdot \cos\beta}$$

$$S_{a\,dyn} \approx \sqrt{8044^2 + 158^2 - 2 \cdot 8044 \cdot 158 \cdot (-0.9848)} \approx \mathbf{8200\ N}$$

# Design Hints

## Belt tensioning for optibelt tension gauges

### Tension gauges optibelt *Optikrik*

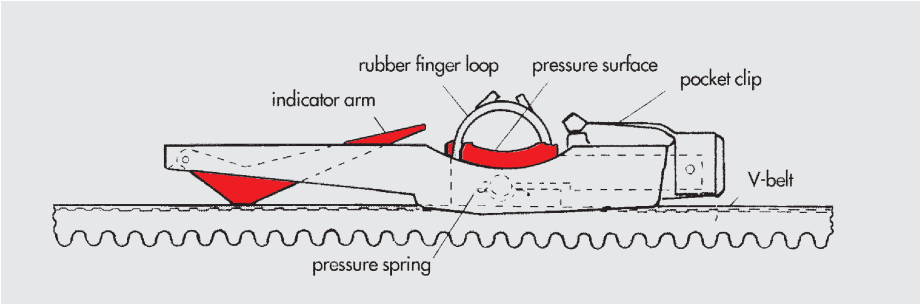


**Optikrik**
**Tension gauges**

This gauge serves a simplified method of belt tensioning.

This simplified tensioning method should be used for example when technical data are not known and the optimum tension therefore cannot be calculated. This method requires only knowledge of the diameter of the small pulley and the belt section and construction.

The Optibelt tension gauge is used to read off the belt tensioning. By reducing or increasing the belt tensioning the desired value can be obtained.

For different tensioning values, Optikrik 0, I, II, III with corresponding measurement areas are available.

**Instructions for use**

1. The gauge is placed in the middle between the two pulleys on the back of the belt, in the case of sets of belts ideally on the central belt. Before doing this, ensure that the indicator is pushed down into the gauge body.(First press the indicator arm onto the scale)
2. Lay the gauge loosely on the belts to be measured and press a finger slowly on to the pressure surface.
3. Try not to touch the gauge with more than one finger during the measuring process.
4. Once you hear or feel a definite click, immediately release pressure and the indicator arm will remain in the measured position.
5. Carefully lift the gauge without moving the indicator arm. Read off the belt tensioning (see diagram). Read off the measurement at the exact point where the top surface of the indicator arm crosses the scale.
6. Reduce or increase the belt tensioning according to the measurement result until it is within the desired tension level.

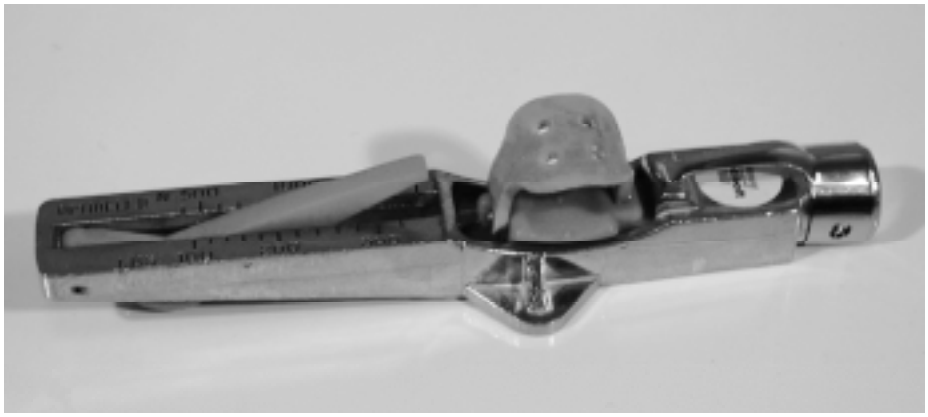

### optibelt *TT2* Tension Tester

**This optibelt *TT2* Tension Tester is used for tension checking of drive belts by means of frequency measurement. Measurements are in Hertz (Hz). When belt parameters are entered, tension is indicated in Newton (N).**

**Advantages of the tester:**

- Non-contact, repeated measurements
- Wide measurement spectrum from
- High accuracy of measurement
- Quality evaluation of the measurement result
- Storage in a data base
- Easy to use
- Universal measuring head for comfortable measuring
- Data communication via PC

# Design Hints

## Belt tensioning for Optibelt V-Belts

| Section | Diameter of small pulley (mm) | Static belt tension $T_{max}$ (N) | | | | | |
|---|---|---|---|---|---|---|---|
| | | RED POWER II | | Standard (wrapped) | | SUPER TX M=S | |
| | | initial fitting new V-belts | re-fitting existing V-belts | initial fitting | Retension | initial fitting | Retension |
| **SPZ; 3V/9N; XPZ; 3VX/9NX** | ≤ 71 | 250 | 200 | 200 | 150 | 250 | 200 |
| | > 71 ≤ 90 | 300 | 250 | 250 | 200 | 300 | 250 |
| | > 90 ≤125 | 400 | 300 | 350 | 250 | 400 | 300 |
| | >125 * | | | | | | |
| **SPA; XPA** | ≤100 | 400 | 300 | 350 | 250 | 400 | 300 |
| | >100 ≤140 | 500 | 400 | 400 | 300 | 500 | 400 |
| | >140 ≤200 | 600 | 450 | 500 | 400 | 600 | 450 |
| | >200 * | | | | | | |
| **SPB; 5V/15N; XPB; 5VX/15NX** | ≤160 | 700 | 550 | 650 | 500 | 700 | 550 |
| | >160 ≤224 | 850 | 650 | 700 | 550 | 850 | 650 |
| | >224 ≤355 | 1000 | 800 | 900 | 700 | 1000 | 800 |
| | >355 * | | | | | | |
| **SPC; XPC** | ≤250 | 1400 | 1100 | 1000 | 800 | 1400 | 1100 |
| | >250 ≤355 | 1600 | 1200 | 1400 | 1100 | 1600 | 1200 |
| | >355 ≤560 | 1900 | 1500 | 1800 | 1400 | 1900 | 1500 |
| | >560 * | | | | | | |
| **Z/10; ZX/X10** | ≤ 50 | – | – | 90 | 70 | 120 | 90 |
| | > 50 ≤ 71 | | | 120 | 90 | 140 | 110 |
| | > 71 ≤100 | | | 140 | 110 | 160 | 130 |
| | >100 * | | | | | | |
| **A/13; AX/X13** | ≤ 80 | – | – | 150 | 110 | 200 | 150 |
| | > 80 ≤100 | | | 200 | 150 | 250 | 200 |
| | >100 ≤132 | | | 300 | 250 | 400 | 300 |
| | >132 * | | | | | | |
| **B/17; BX/X17** | ≤125 | – | – | 300 | 250 | 450 | 350 |
| | >125 ≤160 | | | 400 | 300 | 500 | 400 |
| | >160 ≤200 | | | 500 | 400 | 600 | 450 |
| | >200 * | | | | | | |
| **C/22; CX/X22** | ≤200 | – | – | 700 | 500 | 800 | 600 |
| | >200 ≤250 | | | 800 | 600 | 900 | 700 |
| | >250 ≤355 | | | 900 | 700 | 1000 | 800 |
| | >355 * | | | | | | |

* Tension values for these pulleys must be calculated.

**Tension Gauges:**

| | | |
|---|---|---|
| Optikrik 0 | range: | 70 – 150 N |
| Optikrik I | range: | 150 – 600 N |
| Optikrik II | range: | 500 – 1400 N |
| Optikrik III | range: | 1300 – 3100 N |

The static tension values shown are calculated for maximum power transmission capability (per V-belt) and should be applied only when accurate data is not available.

**Calculation Basis**

| | |
|---|---|
| Wedge belts | speed v = 5 to 42 m/s |
| Classical V-belts | speed v = 5 to 30 m/s |

# Design Hints

## Installation and Maintenance Aids

**Safety:** Before starting any maintenance work, it is extremely important that any machine components are in a safe position which cannot be changed during maintenance work. In addition, safety recommendations of the manufacturer are to be strictly observed.

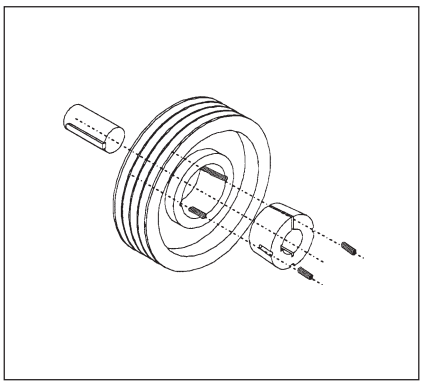

### optibelt KS V-Grooved Pulley with Taper Bush

The V-grooved pulleys are to be checked for damage and correct dimensions before installation.

**Installation** (see figures on page 132)

1. All shiny surfaces like bore and end envelope of cone of the taper bush as well as the conical bore of the pulley have to be cleaned and degreased. Insert taper bush and hub and align all connecting bores. Half tapping holes have to face half plain borings.
2. Stud screws (TB 1008-3030) and/or fillister head screws (TB 3525-5050) should be slightly greased and screwed in. Do not jet tighten the screws.
3. Clean and degrease the shaft. Push pulley with taper bush to the desired position on the shaft. See alignment of the V-grooved pulley.
4. When using a keyway, it has to be inserted in the hub of the shaft first. Between the keyway and the bore hub there needs to be a certain tolerance.
5. With a socket wrench according to DIN 911 stud screws and/or fillister head screws have to be tightened uniformly using the tightening torque stated in the table.
6. After a short operation period (0.5 to 1 hour) check tightening torque of the screws and correct if necessary.
7. In order to prevent the ingress of foreign material, fill empty connecting bores with grease.

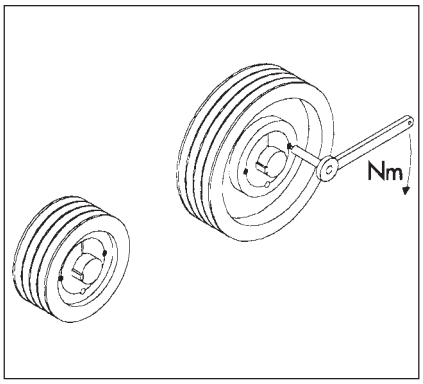


### Taper Bushes, Screw Tightening Torque

| Dimension | Opening width | No. of screws | Tightening torque (Nm) |
|---|---|---|---|
| TB 1008, 1108 | 3 | 2 | 5.7 |
| TB 1210, 1215, 1310, 1610, 1615 | 5 | 2 | 20.0 |
| TB 2012 | 6 | 2 | 31,0 |
| TB 2517 | 6 | 2 | 49.0 |
| TB 3020, 3030 | 8 | 2 | 92.0 |
| TB 3525, 3535 | 10 | 3 | 115.0 |
| TB 4040 | 12 | 3 | 172.0 |
| TB 4545 | 14 | 3 | 195.0 |
| TB 5050 | 14 | 3 | 275.0 |

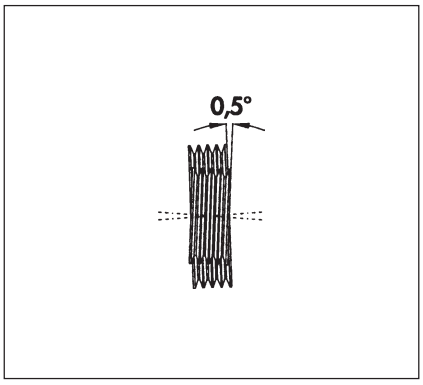


### Horizontal Alignment of Shafts

Motor and drive shafts are to be aligned using a spirit level, if necessary.

***Note!***

Maximum recommended shaft deviation 0.5°

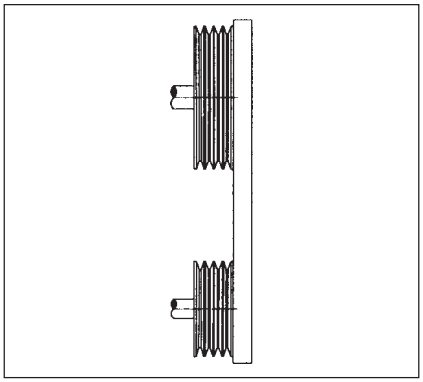

### Vertical Alignment of the V-Grooved Pulleys

The alignment of the V-grooved pulleys is checked before and after tightening the taper bushes on a guide rail.

***Note!***

Check whether the face widths of the V-grooved pulleys have the same sizes. A possible deviation of the face width has to be taken into consideration. With a symmetrical face set-up, the distance of the parallel to the smaller face is half the deviation.

# Design Hints

## Installation and Maintenance Aids

### Initial Installation

Always install the V-belts without using force. Installations using screw drivers, crowbars etc. cause inner and outer damages to the belt. V-belts installed under force might only run for several days. A proper installation of the belt saves you time and money.

With too little setting range for the positioning, the V-grooved pulleys should be pushed onto the shafts with the belts already fitted.

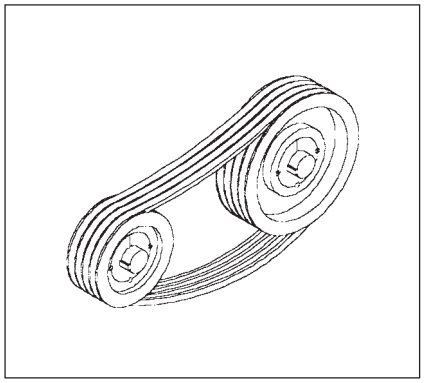

### Belt Tensioning

Use belt tensioning values according to Optibelt's recommendations. Set the motor to the given belt tension in a parallel mode. Operate the belt for some revolutions and check the belt tension again. By experience, belt tension should be checked again after an operation time of about 0.5 to 4 hours and corrected, if necessary.

* For further hints on belt tensioning see page 128.

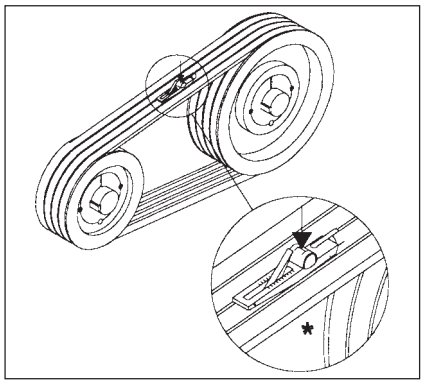


### Admissible Shaft Deviation

After applying the initial installation tension the distances $X_1$, $X_2$ between the two pulleys dd1, $d_{d2}$ and the parallel set to axis height are to be measured. The maximum admissible values for the distance X from the table should if possible be fallen short of, depending on the diameter dd. Depending on the pulley diameter, the intermediate values for X have to be interpolated.

| Pulley diameter $d_{d1}$, $d_{d2}$ | Max. admissible deviation $X_1$, $X_2$ |
|---|---|
| 112 mm | 0.5 mm |
| 224 mm | 1.0 mm |
| 450 mm | 2.0 mm |
| 630 mm | 3.0 mm |
| 900 mm | 4.0 mm |
| 1100 mm | 5.0 mm |
| 1400 mm | 6.0 mm |
| 1600 mm | 7.0 mm |

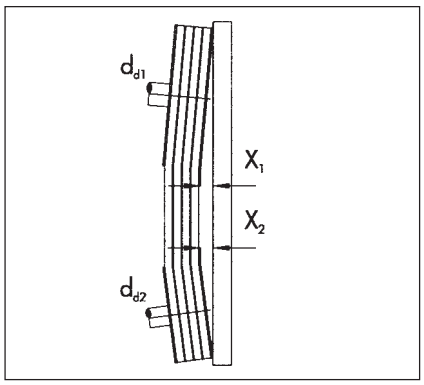


### Control Processes

We recommend controlling the drive regularly, e.g. after 3 to 6 months. V-grooved pulleys are to be controlled for wear and consistence. Use the Optibelt section and pulley groove template as aids.

When changing V-grooved pulleys with taper bush (see figure on page 132) the following aspects have to be observed.

1. Loosen all screws. Screw out one or two screws depending on the bush size, grease them and screw them into the proof test bore.
2. Tighten the screw or screws equally until the bush unscrews from the hub and the pulley can be moved on the shaft freely.
3. Take off the pulley with the bush from the shaft.

**** Section and pulley groove template**

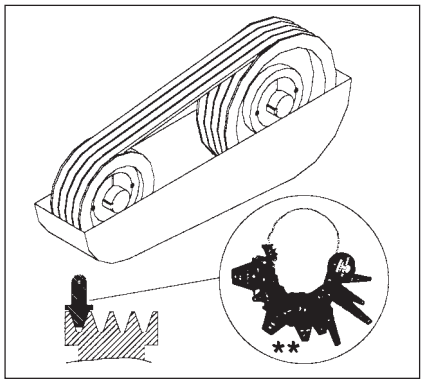

# Design Hints

## V-Grooved Pulleys with Taper Bushes

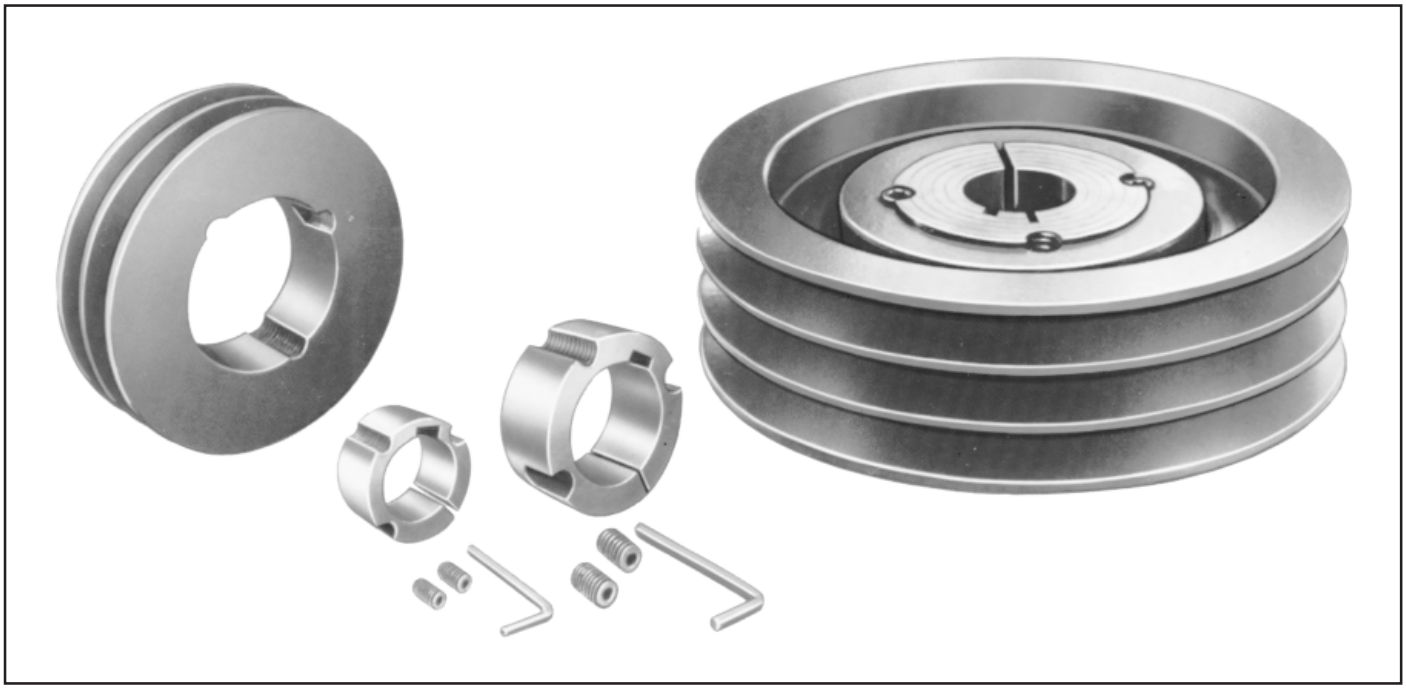

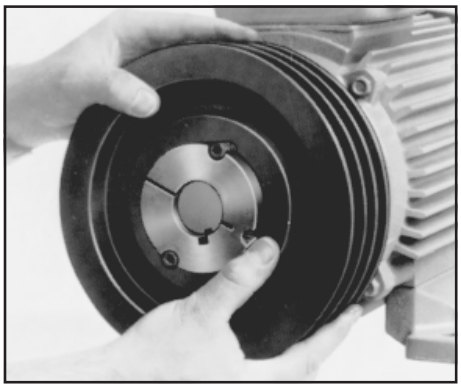

### Assembley

Dimension
TB 1008-3030

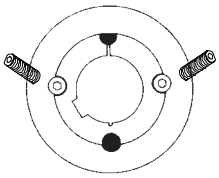

Dimension
TB 3525-5050

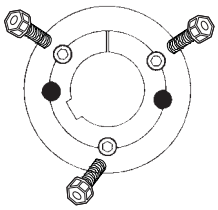

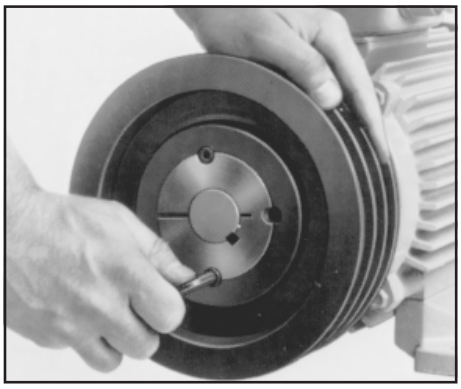

### Disassembly

Dimension
TB 1008-3030

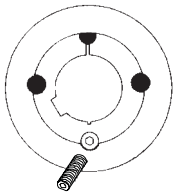

Dimension
TB 3525-5050

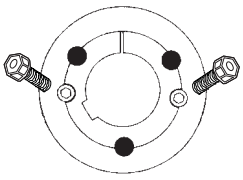

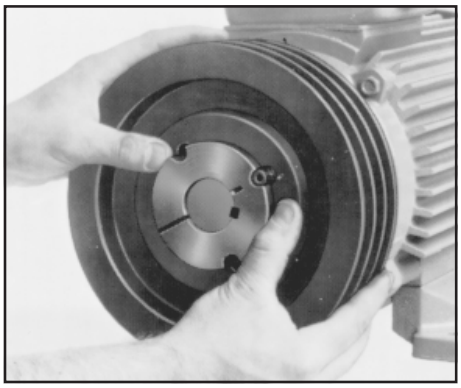

# Design Hints
## Storage

### General note on storage

Properly stored V-belts retain their properties for many years (see also DIN 7716). However, when stored under poor conditions or handled incorrectly, the physical properties of most rubber products will be impaired. This can be the consequence for example of the effects of oxygen, ozone, extreme temperatures, light, moisture or solvents.

### Storage area

The storage area should be dry and dust free. V-belts must not be stored close to chemicals, solvents, fuels, lubricants and acids etc.

### Temperature

V-belts should be stored at temperatures between + 15 °C and + 25 °C. Lower temperatures usually have no detrimental effect on the V-belts. Since, however, belts become very stiff at low temperatures, they should be warmed to approximately + 20 °C before fitting to avoid fracture and cracking.

Radiators and supply pipes should be screened. V-belts should be stored at least 1m away from radiators.

### Light

V-belts should be protected against light, especially direct sunlight and strong artificial light with a high ultra-violet content (ozone formation) such as naked fluorescent tubes. Illumination using conventional light bulbs is advisable.

### Ozone

In order to counteract the harmful effects of ozone, warehouses should not contain any appliances that generate ozone, for example fluorescent lights, mercury vapour lamps or high voltage electrical equipment. Combustion gases and vapours which could lead to the formation of ozone by photo-chemical processes must be avoided or eliminated.

### Moisture

Damp storage areas are unsuitable. Care must be taken to ensure that condensation does not develop. The most favourable relative air humidity is below 65%.

### Proper Storage

Because stress can promote both permanent deformation and cracking, care must be taken to ensure that V-belts are stored without stress i.e. without tension, compression or any other form of pressure.

If V-belts have to be stored horizontally and stacked upon each other, it is recommended that the stack height does not exceed 300 mm in order to avoid permanent deformation. If, in order to save space, V-belts are hung, the diameter of the cylinder on which the belts rest should be at least ten times the height of the belt section.

**optibelt *S=C plus* and optibelt *SUPER TX M=S* belts do not need to be stored in sets as they can be formed into sets without having to be measured.**

### Cleaning

Dirty V-belts can be cleaned using a 1:10 mixture of glycerine and methylated spirits. Petrol, benzole, turpentine and the like should not be used.

In addition, sharp objects, wire brushes, emery paper etc. must, under all circumstances, be avoided as these can cause damage to the belt.

# Design Hints
## Physical Properties

| These tables are provided to simplify selection of the correct Optibelt for any drive problem. Detailed information is given elsewhere in this manual. | Ambient temperature maximum / minimum (°C) | | Oil resistant | Anti-static properties (after testing) | S=C plus SatzConstant[1] M=S Matched Set[2] | FRAS - for mining applications | Smooth running | Stretch | |
|---|---|---|---|---|---|---|---|---|---|
| | Standard construction | Special construction XHR | Standard construction | | | | | Standard construction | Sjpecial construction |
| ***SK*** **high-performance wedge belts** | – 40<br>+ 70 | – 30<br>+ 90 | limited | yes | yes[1] | ja | medium good | low | very low |
| ***RED POWER II*** **high-performance wedge belts** | – 30<br>+ 100 | | good | yes | yes[1] | | good | very low | |
| ***SUPER TX M=S*** **raw edge, moulded cogged V-belts** | – 30<br>+ 90 | | good | yes | yes[2] | | good | very low | |
| ***MARATHON 1, MARATHON 2 M=S*** **automotive belts** | – 30<br>+ 90 | | good | yes | M2<br>yes[2] | | good | very low | |
| ***VB*** **classical V-belts** | – 40<br>+ 70 | – 30<br>+ 90 | limited | yes | yes[1] | ja | medium good | low | very low |
| ***KB*** **Kraftbands** | – 40<br>+ 70 | – 35<br>+ 90 | limited | yes | | | good | low | very low |
| ***DK*** **double section V-belts** | – 35<br>+ 85 | | good | yes | | | medium | low | |
| ***SUPER VX*** **variable speed belts** | – 30<br>+ 90 | | good | yes | | | very good | very low | |
| ***RB*** **ribbed belts** | – 30<br>+ 90 | – 30<br>+ 120 | good | PJ<br>PK, PL<br>Special con-struction | | | very good | low | |

# Design Hints
## Physical Properties

| Recommended max. belt speed m/s | Efficiency | Behaviour under shock loading | Vibration behaviour | Use on variable speed pulleys | Synchronous | Recommended max. speed ratio | Use with outside idlers | | Maintenance | Recommended applications |
|---|---|---|---|---|---|---|---|---|---|---|
| | | | | | | | Standard construction | Special con-struction | | There are a number of applications that can be covered by more than one type of belt. In these instances, belt selection must be made on an individual case basis. |
| ≤ 42 | up to 97 % | good | low | possible | no | up to 1 : 10 | limi-ted | good | low | Compressors, mixers, rotary print machines, extruders, worm compressors, textile looms, axial flow fans, rotary pumps |
| ≤ 42 | up to 97% | good | low | possible | no | up to 1 : 10 | limi-ted | good | service free | Fans, pumps, mixers, grinders, special machinery, lathes and drills, grinders |
| depends on section ≤ 42 | up to 97 % | good | low | possible | no | up to 1 : 12 | limi-ted | good | low | Fans, pumps, mixers, grinders, special machinery, lathes and drills, grinders |
| ≤ 42 | up to 97 % | good | low | possible | no | up to 1 : 12 | limi-ted | good | service free | Automobiles, generators, water pumps, fans |
| ≤ 30 | up to 97 % | good | low | possible | no | up to 1 : 12 | limi-ted | good | low | Pumps, presses, crushers, rotary saws, pillar drills, planing machinery, concrete mixers, compressors, lawn mowers, aerators, bale presses, chaff cutters |
| depends on section ≤ 42 | up to 97 % | very good | very low | not possible | no | up to 1 : 15 | limi-ted | very good | low | Fans, shredders, road millers, extruders, rotary mo-wers, stone crushers, saw mills, vibration rollers, conveyors, mixers, combine harvesters, pulpers |
| ≤ 30 | up to 95 % | good | low | not possible | no | up to 1 : 5 | very good | good | low | Special reversible drives, textile looms, sweepers, harvesters |
| depends on section ≤ 42 | up to 95 % | good | low | gut | no | up to 1 : 12 for 2 variable speed pulleys | limi-ted | | low | Special drives, compact units, snowmobile drives, multi-colour offset, adjustable pulley sets, thresher drum drives, spooling machines, lathes |
| depends on section ≤ 60 | up to 96 % | good | very low | not possible | no | up to 1 : 35 | good | | low | Offset machines, washing machines, milling machi-nes, drills, auxiliary drives, main shaft drives |

# Design Hints
## Physical Properties

| These tables are provided to simplify selection of the correct Optibelt for any drive problem. Detailed information is given elsewhere in this manual. | Ambient temperature maximum / minimum (°C) | | Oil resistant | Anti-static properties (after testing) | Smooth running | Stretch |
|---|---|---|---|---|---|---|
| | Standard construction | Special construction XHR | Standard construction | | | |
| ***OMEGA*** **timing belts** | – 30<br>+ 85 | | limited | yes | very good | keine |
| ***ZR*** **timing belts** | – 30<br>+ 85 | – 30<br>+ 120 | limited | yes | very good | keine |
| ***ZRM*** **timing belts made of polyurethane** | – 30<br>+ 80 | | good | no | good | keine |
| ***RR*** **plastic round section belting** | – 10<br>+ 80 | | good | no | medium | high |
| ***KK*** **plastic V-belting** | – 10<br>+ 80 | | good | no | medium | high |
| **Optimat *OE* open ended V-belting, punched DIN 2216** | – 20<br>+ 70 | | limited | no | medium | high |
| ***PKR*** **V-belts with patterned top surface** | – 30<br>+ 70 | | limited | yes | medium | low |
| **Optimax *HF* high-performance flat belts** | – 20<br>+ 110 | | limited | no | very good | low |

# Design Hints
## Physical Properties

| Recommended max. belt speed m/s | Efficiency | Behaviour under shock loading | Vibration behaviour | Use on variable speed pulleys | Synchronous | Recommended max. speed ratio | Use with outside idlers | | Maintenance | Recommended applications |
|---|---|---|---|---|---|---|---|---|---|---|
| | | | | | | | Standard construction | Special con-struction | | There are a number of applications that can be covered by more than one type of belt. In these instances, belt selection must be made on an individual case basis. |
| depends on section ≤ 80 | up to 98 % | sensi-tive | depends on speed | not possible | yes | up to 1 : 10 | good | gut | maintenance free | Textile machines, spinning machines, textile looms, printing machines, paper machines, wood working machines, machine tools, linear units, conveyors, skid unit, packing machines, door and gate openers, lifting devices, mixers, extruders, compressors |
| depends on section ≤ 80 | up to 98 % | sensi-tive | depends on speed | not possible | yes | up to 1 : 10 | good | gut | maintenance free | Copiers, food processors, swivel arm robots, gripper drives, belt grinders, cam shaft drives, brush drives, clocks, X-ray equipment, envelope stuffers, cameras, plotters, coin operated machinery, main and feed drives, conveyor drives, material feed, printers |
| depends on section ≤ 80 | up to 98 % | sensi-tive | depends on speed | not possible | yes | up to 1 : 10 | good | gut | maintenance free | Cameras, plotters, printers, coin operated machinery, main and feed drives, conveyor drives, sample con-veyors, material feed, flight models |
| ≤ 20 | up to 95 % | good | low | not possible | no | up to 1 : 10 | good | gut | frequent retensioning | Special machinery |
| ≤ 20 | up to 95 % | good | low | not possible | no | up to 1 : 10 | good | gut | frequent retensioning | Packaging machinery, conveyor systems, ram conveyors, varnishing equipment |
| ≤ 20 | up to 90 % | good | medium | limited possible | no | up to 1 : 10 | limi-ted | | frequent retensioning | Where installation conditions are difficult |
| depends on section ≤ 20 | up to 95 % | good | low | limited possible | no | up to 1 : 10 | limi-ted | gut | low | Conveyor systems in the timber industry, in cement works, in agriculture, in the ceramics industry, in the glass industry, at airports, in sea and river ports |
| ≤ 70 | up to 95 % | good | very low | not possible | no | up to 1 : 12 | very good | | low | Water turbines, emergency power generators, saw mills, shredders, worm compressors, roller drives, transmission drives, conical drives, cross cutters, floor cleaning equipment, multiple positioning drives, crus-hers, sealing belts, hammer mills |

# Design Hints
## Problems – Causes – Remedies

| Problems | Causes | Remedies |
|---|---|---|
| **Belt failure shortly after fitting** | Forceful installation, causing damage to the tension cord | Follow installation instructions for easy belt fitting |
| | Ingress of foreign matter during operation | Fit protection guard |
| | Drive undersized, not enough belts | Check drive design and determine new dimensions |
| | Drive blocked | Remove cause |
| **Breaks and cracks in the base of the belt (brittleness)** | Outside idler pulley in use that does not comply with the positioning and sizes recommended by us | Observe Optibelt recommendations, e.g. increase the diameter; replace with an inside idler on the slack side of the drive; use Optibelt Red Power II or an Optibelt special construction |
| | Pulley diameter too small | Re-design using recommended minimum pulley diameters; use an Optibelt special construction or Optibelt Super TX M=S |
| | Excessive heat | Remove or baffle heat source; improve ventilation; Use Optibelt special construction XHR (extra heat resistant) or Optibelt Super TX M=S or V-belt with Aramid cord construction |
| | Excessive cold | Warm the belt before operation; use Optibelt special construction XCR (extra cold resistant) |
| | Excessive belt slip | Retension drive according to installation instructions; check drive design and re-design if necessary |
| | Contamination by chemicals | Protect drive from contamination source; use Optibelt special construction |
| **Severe belt vibration** | Drive undersized | Check drive design and modify if necessary |
| | Centre distance significantly longer than recommended | Shorten centre distance;<br>Use an inside idler in the drive slack side;<br>Re-design using Optibelt KB Kraftbands |
| | High shock load | Use Optibelt KB Kraftbands; Use an inside idler in the drive slack side; use an Optibelt special construction |
| | Belt tension too low | Correct tension |
| | Unbalanced V-pulleys | Balance pulleys |
| **Belts cannot be retensioned** | Insufficient allowance for centre distance in drive design | Modify drive to allow for the Optibelt recommended take-up |
| | Excessive stretch caused by inadequate performance | Carry out drive calculation and re-design |
| | Incorrect belt length | Use shorter belts |

# Design Hints

## Problems – Causes – Remedies

| Problems | Causes | Remedies |
|---|---|---|
| **Belts turn over in pulley grooves** | Poor drive alignment<br>Incorrect belt / pulley groove section<br><br>Excessive wear in pulley grooves<br>Excessive vibration<br><br>Belt tension too low<br>Foreign matter in the pulley grooves | Realign pulleys<br>Match belt and pulley groove section<br><br>Renew pulleys<br>Use an inside idler on drive slack side; use Optibelt KB Kraftbands<br><br>Re-tension drive<br>Remove foreign matter and install drive guard |
| **Excessive wear on belt edges** | Starting torque too high<br><br>Incorrect pulley groove angle<br><br>Excessive pulley groove wear<br><br>Incorrect belt / pulley groove section<br><br>Poor pulley alignment<br><br>Pulley diameter below recommended minimum<br><br>Belt tension too low<br><br>Belt rubbing against or catching on protruding parts | Check drive design and re-design<br><br>Re-machine or replace pulleys<br><br>Replace pulleys<br><br>Match belt and pulley groove section<br><br>Realign pulleys<br><br>Increase pulley diameter (re-design drive); use Optibelt special construction or Optibelt TX M=S<br><br>Check tension and retension<br><br>Remove protruding parts; re-position drive |
| **Excessive running noise** | Poor pulley alignment<br><br>Belt tension too low<br><br>Drive overloaded | Realign pulleys<br><br>Check tension and retension<br><br>Check drive design and re-design if necessary |
| **Belt swelling or softening and sticky** | Contamination by oil, grease, chemicals | Protect drive from contamination source; use Optibelt XOR (extra oil resistant) or Optibelt Super TX M=S;<br>Clean pulley grooves with petrol or alcohol before fitting new belts |
| **Uneven belt stretch** | Worn or badly machined pulley grooves<br><br>Used belts mixed with new belts on the drive<br><br>Belts from different manufacturers used on same drive | Replace pulleys<br><br>Replace with a completely new set of belts<br><br>Belt sets must comprise belts from one manufacturer only – Optibelt S=C plus, Optibelt Super TX M=S, Optibelt Red Power II |

Should other problems occur, please contact our engineers from the applications engineering dept They will require comprehensive technical details in order to provide you with concrete solutions.

# Design Hints

## Length Measurement Conditions and Conversion Factors

### Measuring the Belt Length

The belt is placed over two identically sized measuring pulleys with the design of groove shown in the following drawings. The dimensions are given in the Tables 63 to 69, on pages 141/142.

Pressure is applied to the adjustable pulleys so that the force Q is applied to the belt. Before measuring the drive centre distance a, the belt should be fully rotated three times under load. This ensures that the belt is well seated in the pulley, an essential pre-condition for the accuracy of the resulting measurement.

The length is obtained by adding the diameter of the pulley to twice the drive centre distance a.

$L_d = 2\ a + U_d$

$L_a = 2\ a + U_a$

You will find the length conversion factors in the tables on pages 141/142 and 145/146.

*Arrangement for measuring belt length*

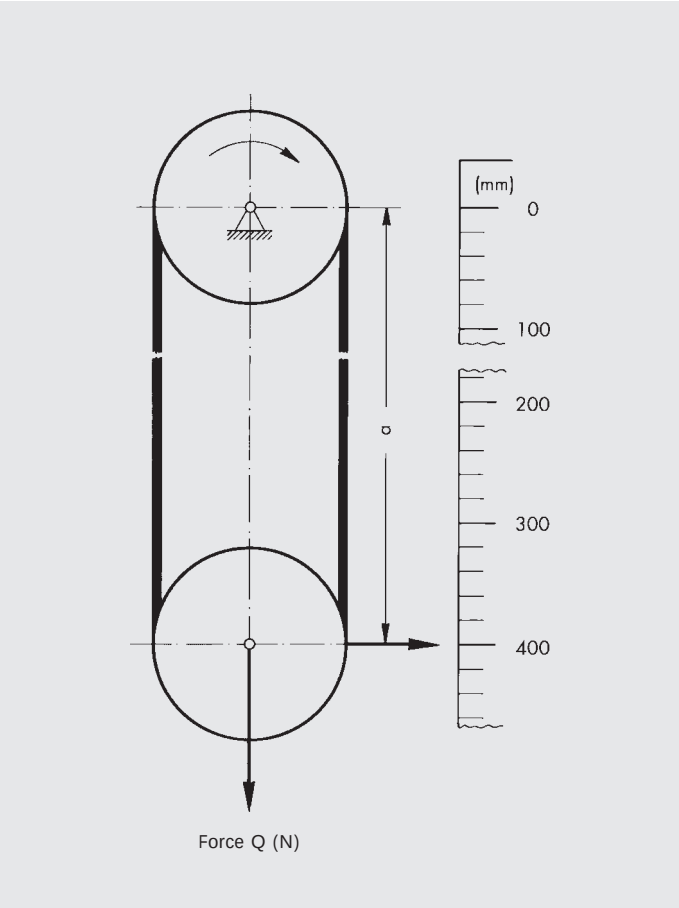


*Measurement pulley for wedge belts to BS 3790, DIN 7753 Part 1 and classical V-belts to BS 3790 and DIN 2215*

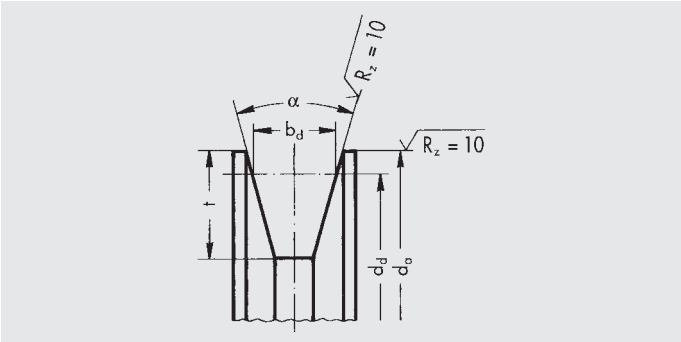


*Measurement pulley for wedge belts USA Standard RMA/MPTA*

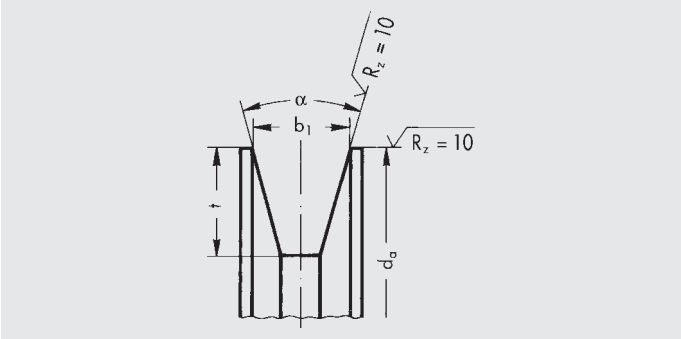


*Measurement pulley for Kraftbands*

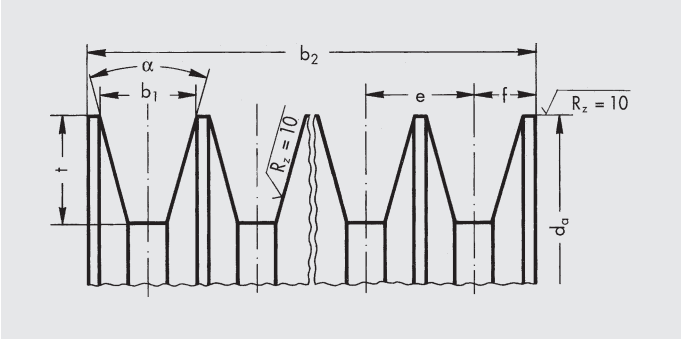


*Measurement pulley for double section V-belts*

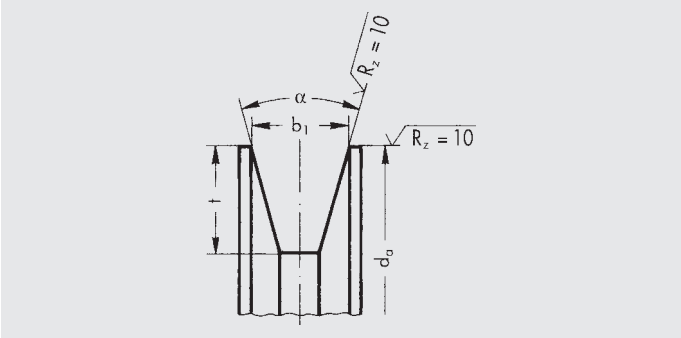

# Design Hints

## Length Measurement Conditions and Conversion Factors

*Table 63: Optibelt SK wedge belts*
*Optibelt Super TX M=S wedge belts, raw edge, moulded cogged*
*Measurement pulleys and force to BS 3790, DIN 7753 Part 1 and ISO 4183*

| Section | Datum circum-ference $U_d = d_d \cdot \pi$ | Datum diameter $d_d$ ± 0.05 | Outside diameter $d_a$ ± 0.05 | Datum width $b_d$ | Groove angle $\alpha°$ ± 10' | Groove depth $t_{min}$ | Force Q (N) | Outside length $L_a$ (mm) | Inside length $L_i$ (mm) |
|---|---|---|---|---|---|---|---|---|---|
| SPZ; XPZ | 300 | 95.49 | 100 | 8.5 | 36 | 11 | 360 | $L_a \approx L_d$ + 13<br>$L_a \approx L_i$ + 51 | $L_i \approx L_d$ – 38<br>$L_i \approx L_a$ – 51 |
| SPA; XPA | 450 | 143.24 | 149 | 11.0 | 36 | 14 | 560 | $L_a \approx L_d$ + 18<br>$L_a \approx L_i$ + 63 | $L_i \approx L_d$ – 45<br>$L_i \approx L_a$ – 63 |
| SPB; XPB | 600 | 190.99 | 198 | 14.0 | 36 | 18 | 900 | $L_a \approx L_d$ + 22<br>$L_a \approx L_i$ + 82 | $L_i \approx L_d$ – 60<br>$L_i \approx L_a$ – 82 |
| SPC; XPC | 1000 | 318.31 | 328 | 19.0 | 36 | 24 | 1500 | $L_a \approx L_d$ + 30<br>$L_a \approx L_i$ + 113 | $L_i \approx L_d$ – 83<br>$L_i \approx L_a$ – 113 |

*Table 64: Optibelt SK wedge belts*
*Optibelt Super TX M=S wedge belts, raw edge, moulded cogged*
*Measurement pulleys and force to USA Standard RMA/MTPA*

| Section | Outside circum-ference $U_a = d_a \cdot \pi$ | Outside diameter $d_a$ ± 0,13 | Upper groove width $b_1$ ± 0,13 | Groove angle $\alpha°$ ± 15' | Groove depth $t_{min}$ | Force Q (N) | Inside length $L_i$ (mm) |
|---|---|---|---|---|---|---|---|
| 3V/ 9N; 3VX/9NX | 300 | 95.5 | 8.90 | 38 | 9.0 | 445 | $L_i \approx L_a$ – 42 |
| 5V/15N; 5VX/15NX | 600 | 191.0 | 15.24 | 38 | 15.0 | 1000 | $L_i \approx L_a$ – 71 |
| 8V/25N | 1000 | 318.3 | 25.40 | 38 | 25.5 | 2225 | $L_i \approx L_a$ – 120 |

*Table 65: Optibelt VB classical V-belts*
*Optibelt Super TX M=S classical V-belts, raw edge, moulded cogged*
*Measurement pulleys and force to BS 3790, DIN 2215 and ISO 4183*

| Section | Datum circum-ference $U_d = d_d \cdot \pi$ | Datum diameter $d_d$ ± 0,05 | Outside diameter $d_a$ ± 0,05 | Datum width $b_d$ | Groove angle $\alpha°$ ± 10' | Groove depth $t_{min}$ | Force Q (N) | Outside length $L_a$ (mm) | Inside length $L_d$ (mm) |
|---|---|---|---|---|---|---|---|---|---|
| 5 | 70 | 22.28 | 24.88 | 4.2 | 32 | 5 | 30 | $L_a \approx L_i$ + 19<br>$L_a \approx L_d$ + 8 | $L_d \approx L_i$ + 11<br>$L_d \approx L_a$ – 8 |
| Y/6 | 90 | 28.65 | 31.85 | 5.3 | 32 | 6 | 40 | $L_a \approx L_i$ + 25<br>$L_a \approx L_d$ + 10 | $L_d \approx L_i$ + 15<br>$L_d \approx L_a$ – 10 |
| 8 | 140 | 44.56 | 48.56 | 6.7 | 32 | 8 | 80 | $L_a \approx L_i$ + 31<br>$L_a \approx L_d$ + 12 | $L_d \approx L_i$ + 19<br>$L_d \approx L_a$ – 12 |
| Z/10; ZX/X10 | 180 | 57.30 | 62.30 | 8.5 | 34 | 10 | 110 | $L_a \approx L_i$ + 38<br>$L_a \approx L_d$ + 16 | $L_d \approx L_i$ + 22<br>$L_d \approx L_a$ – 16 |
| A/13; AX/X13 | 300 | 95.50 | 102.10 | 11.0 | 34 | 12 | 200 | $L_a \approx L_i$ + 50<br>$L_a \approx L_d$ + 20 | $L_d \approx L_i$ + 30<br>$L_d \approx L_a$ – 20 |
| B/17; BX/X17 | 400 | 127.32 | 135.72 | 14.0 | 34 | 15 | 300 | $L_a \approx L_i$ + 69<br>$L_a \approx L_d$ + 29 | $L_d \approx L_i$ + 40<br>$L_d \approx L_a$ – 29 |
| 20 | 520 | 165.52 | 175.12 | 17.0 | 34 | 18 | 750 | $L_a \approx L_i$ + 79<br>$L_a \approx L_d$ + 31 | $L_d \approx L_i$ + 48<br>$L_d \approx L_a$ – 31 |
| C/22; CX/X22 | 700 | 222.82 | 234.22 | 19.0 | 34 | 20 | 750 | $L_a \approx L_i$ + 88<br>$L_a \approx L_d$ + 30 | $L_d \approx L_i$ + 58<br>$L_d \approx L_a$ – 30 |
| 25 | 800 | 254.65 | 267.25 | 21.0 | 34 | 22 | 750 | $L_a \approx L_i$ + 100<br>$L_a \approx L_d$ + 39 | $L_d \approx L_i$ + 61<br>$L_d \approx L_a$ – 39 |
| D/32 | 1000 | 318.31 | 334.52 | 27.0 | 36 | 28 | 1400 | $L_a \approx L_i$ + 126<br>$L_a \approx L_d$ + 51 | $L_d \approx L_i$ + 75<br>$L_d \approx L_a$ – 51 |
| E/40 | 1800 | 572.96 | 596.96 | 32.0 | 36 | 36 | 1800 | $L_a \approx L_i$ + 157<br>$L_a \approx L_d$ + 77 | $L_d \approx L_i$ + 80<br>$L_d \approx L_a$ – 77 |

# Design Hints

## Length Measurement Conditions and Conversion Factors

*Table 66: Optibelt KB Kraftbands with high-performance wedge belts*
*Measurement pulleys and force*

| Section | Outside circum-ference $U_a = d_a \cdot \pi$ | Outside diameter $d_a$ ± 0,13 | Upper groove width $b_1$ ± 0,13 | Groove angle $\alpha°$ ± 15' | Groove depth $t_{min}$ | Mean distance e | Tolerance e[1)] | Σ Tol. e[2)] | Force per rib Q (N) | Inside length $L_i$ (mm) |
|---|---|---|---|---|---|---|---|---|---|---|
| 3V/9J | 300 | 95.50 | 8.90 | 38 | 9.0 | 10.30 | ± 0.25 | ± 0.5 | 445 | $L_i \approx L_a$ – 42 |
| 5V/15J | 600 | 191.00 | 15.20 | 38 | 15.0 | 17.50 | ± 0.25 | ± 0.5 | 1000 | $L_i \approx L_a$ – 71 |
| 8V/25J | 1000 | 318.30 | 25.40 | 38 | 25.5 | 28.60 | ± 0.40 | ± 0.8 | 2225 | $L_i \approx L_a$ – 120 |

*Table 67: Optibelt KB Kraftbands Section SPZ, SPA, SPB and SPC*
*Measurement pulleys and force*

| Section | Datum circum-ference $U_d = d_d \cdot \pi$ | Datum diameter $d_d$ ± 0,13 | Outside diameter $d_a$ ± 0,13 | Datum width $b_d$ | Groove angle $\alpha°$ ± 15' | Groove depth $t_{min}$ | Mean distance e | Tolerance e[1)] | Σ Tol. e[2)] | Force per rib Q (N) | Datum length $L_d$ (mm) |
|---|---|---|---|---|---|---|---|---|---|---|---|
| SPZ | 300 | 95.49 | 100.00 | 8.5 | 36 | 11.0 | 12.00 | ± 0.30 | ± 0.5 | 360 | $L_d \approx L_a$ – 13 |
| SPA | 450 | 143.24 | 149.00 | 11.0 | 36 | 14.0 | 15.00 | ± 0.30 | ± 0.5 | 560 | $L_d \approx L_a$ – 18 |
| SPB | 600 | 190.99 | 198.00 | 14.0 | 36 | 18.0 | 19.00 | ± 0.40 | ± 0.8 | 900 | $L_d \approx L_a$ – 22 |
| SPC | 1000 | 318.31 | 328.00 | 19.0 | 36 | 24.0 | 25.50 | ± 0.40 | ± 0.8 | 1500 | $L_d \approx L_a$ – 30 |

*Table 68: Optibelt KB Kraftbands with classical V-belts*
*Measurement pulleys and force*

| Section | Outside circum-ference $U_a = d_a \cdot \pi$ | Outside diameter $d_a$ ± 0,13 | Upper groove width $b_1$ ± 0,13 | Groove angle $\alpha°$ ± 15' | Groove depth $t_{min}$ | Mean distance e | Tolerance e[1)] | Σ Tol. e[2)] | Force per rib Q (N) | Inside length $L_i$ (mm) |
|---|---|---|---|---|---|---|---|---|---|---|
| A/HA | 254 | 80.85 | 12.45 | 32 | 12.5 | 15.88 | ± 0.38 | ± 0.8 | 300 | $L_i \approx L_a$ – 36 |
| B/HB | 381 | 121.28 | 16.00 | 32 | 14.5 | 19.05 | ± 0.38 | ± 0.8 | 450 | $L_i \approx L_a$ – 62 |
| C/HC | 635 | 202.13 | 22.33 | 34 | 20.0 | 25.40 | ± 0.38 | ± 0.8 | 850 | $L_i \approx L_a$ – 75 |
| D/HD | 889 | 282.96 | 31.98 | 34 | 28.0 | 36.53 | ± 0.38 | ± 0.8 | 1000 | $L_i \approx L_a$ – 111 |

1) Tolerance for the mean distance e between two adjacent grooves.
2) The sum of all deviations from the nominal dimension e for all groove spacing on one pulley must not exceed the stated figure.

*Table 69: Optibelt DK double section V-belts*
*Measurement pulleys and force according to DIN 5289*

| Section | Outside circumference $U_a = d_a \cdot \pi$ | Outside diameter $d_a$ | Upper groove width $b_1$ | Groove angle $\alpha°$ ± 20' | Groove depth $t_{min}$ | Force Q (N) |
|---|---|---|---|---|---|---|
| AA/HAA | 300 | 95.49 | 12.6 | 34 | 8 | 300 |
| BB/HBB | 400 | 127.32 | 16.2 | 34 | 10 | 450 |
| CC/HCC | 600 | 190.99 | 22.3 | 34 | 14 | 850 |
| DD/HDD | 900 | 286.48 | 32.0 | 34 | 20 | 1400 |
| 22 x 22 | 600 | 190.99 | 22.3 | 34 | 14 | 750 |
| 25 x 22 | 942 | 300.00 | 25.0 | 34 | 22 | 1200 |

# Design Hints
## Length Tolerances

*Table 70: Wedge belts DIN 7753 Part 1*

| Section | Pitch length (mm) | Length tolerance (mm Permissible deviation from pitch length | | Set tolerance (mm) Permissible difference between the pitch lengths $L_d$ of the belts in one and the same set on multiple belt drives | | | |
|---|---|---|---|---|---|---|---|
| | | Optibelt | | Optibelt | | DIN 7753/ISO 4184 | |
| | | wrapped | DIN 7753 | wrapped | raw edge | wrapped | raw edge |
| SPZ/XPZ<br>SPA/XPA<br>SPB/XPB<br>SPC/XPC | > 630 ≤ 900 | DIN | ± 6 bis ± 9 | 2.0 | 2.0 | 2.0 | 2.0 |
| | > 900 ≤ 1 250 | DIN | ± 9 bis ± 12 | 2.0 | 4.0 | 2.0 | 4.0 |
| | > 1 250 ≤ 2 000 | ± 2.0 | ± 12 bis ± 20 | ± 2.0 | 6.0 | 2.0 | 6.0 |
| | > 2 000 ≤ 3 150 | ± 2.0 | ± 20 bis ± 32 | ± 2.0 | 6.0 | 4.0 | 6.0 |
| | > 3 150 ≤ 5 000* | ± 2.0 | ± 32 bis ± 50 | ± 2.0 | 10.0* | 6.0 | 10.0* |
| | > 5 000 ≤ 8 000 | ± 4.0 | ± 50 bis ± 80 | ± 4.0 | | 10.0 | |
| | > 8 000 ≤10 000 | ± 6.0 | ± 80 bis ±100 | ± 6.0 | | 16.0 | |
| | > 10 000 ≤12 500 | ± 8.0 | ±100 bis ±125 | ± 8.0 | | | |

*Table 71: Classical V-belts DIN 2215*

| Section | Pitch length (mm) | Length tolerance (mm Permissible deviation from pitch length | | Set tolerance (mm) Permissible difference between the pitch lengths $L_d$ of the belts in one and the same set on multiple belt drives | | | |
|---|---|---|---|---|---|---|---|
| | | Optibelt | | Optibelt | | DIN 2215/ISO 4184 | |
| | | wrapped | DIN 2215 | wrapped | raw edge | wrapped | raw edge |
| 5<br>Y/6<br>8<br>Z/10; ZX/X10<br>A/13; AX/X13<br>B/17; BX/X17<br>20<br>C/22; CX/X22<br>25<br>D/32<br>E/40 | ≤ 250 | DIN | + 8.0/– 4.0 | 2.0 | | 2.0 | 2.0 |
| | > 250 ≤ 315 | DIN | + 9.0/– 4.0 | 2.0 | | 2.0 | 2.0 |
| | > 315 ≤ 400 | DIN | + 10.0/– 5.0 | 2.0 | | 2.0 | 2.0 |
| | > 400 ≤ 500 | DIN | + 11.0/– 6.0 | 2.0 | | 2.0 | 2.0 |
| | > 500 ≤ 630 | DIN | + 13.0/– 6.0 | 2.0 | 2.0 | 2.0 | 2.0 |
| | > 630 ≤ 800 | DIN | + 15.0/– 7.0 | 2.0 | 2.0 | 2.0 | 2.0 |
| | > 800 ≤ 900 | DIN | + 17.0/– 8.0 | 2.0 | 2.0 | 2.0 | 2.0 |
| | > 900 ≤ 1 250 | DIN | + 19.0/– 10.0 | 4.0 | 4.0 | 4.0 | 4.0 |
| | > 1 250 ≤ 1 600 | ± 2,0 | + 23.0/– 11.0 | ± 2.0 | 4.0 | 4.0 | 4.0 |
| | > 1 600 ≤ 2 000 | ± 2,0 | + 27.0/– 13.0 | ± 2.0 | 4.0 | 4.0 | 4.0 |
| | > 2 000 ≤ 2 500 | ± 2,0 | + 31.0/– 16.0 | ± 2.0 | 6.0 | 8.0 | 8.0 |
| | > 2 500 ≤ 3 150 | ± 2,0 | + 37.0/– 18.0 | ± 2.0 | 8.0 | 8.0 | 8.0 |
| | > 3 150 ≤ 4 000* | ± 2,0 | + 44.0/– 22.0 | ± 2.0 | 8.0* | 12.0 | 12.0* |
| | > 4 000 ≤ 5 000 | ± 2,0 | + 52.0/– 26.0 | ± 2.0 | | 12.0 | |
| | > 5 000 ≤ 6 300 | ± 4,0 | + 63.0/– 32.0 | ± 4.0 | | 20.0 | |
| | > 6 300 ≤ 8 000 | ± 4,0 | + 77.0/– 38.0 | ± 4.0 | | 20.0 | |
| | > 8 000 ≤10 000 | ± 6,0 | + 93.0/– 46.0 | ± 6.0 | | 32.0 | |
| | >10 000 ≤12 500 | ± 8,0 | + 112.0/– 56.0 | ± 8.0 | | 32.0 | |
| | >12 500 ≤15 000 | DIN | + 140.0/– 70.0 | DIN | | 48.0 | |
| | >15 000 ≤20 000 | DIN | + 170.0/– 85.0 | DIN | | 48.0 | |

* Maximum production length for raw edge V-belts ≤ 3550 mm.

**Optibelt-S=C plus or Optibelt Super TX M=S V-belts can be used in sets without measuring or remeasuring.**

# Design Hints
## Length Tolerances

*Table 72: Wedge belts USA Standard RMA / MTPA*

| Section | Length designation | Outside length (mm) | Length tolerance (mm) Permissible deviation from outside lengths Replace complete belt sets | | Set tolerance (mm) Permissible deviation between the outside lengths $L_a$ of the belts in one and the same set on multiple belt drives Replace complete belt sets | | |
|---|---|---|---|---|---|---|---|
| | | | Optibelt wrapped | RMA / MPTA | Optibelt wrapped | Optibelt raw edge | RMA / MPTA |
| 3V / 9N; 3VX / 9NX, 5V / 15N; 5VX / 15NX; 8V / 25N | 265 ≤ 500 | 673 ≤ 1 270 | acc. RMA / MPTA | ± 8 | 4 | 4 | 4 |
| | 530 | 1 346 | ± 2 | ± 10 | ± 2 | 4 | 4 |
| | 560 | 1 422 | ± 2 | ± 10 | ± 2 | 6 | 6 |
| | 600 ≤ 800 | 1 524 ≤ 2 032 | ± 2 | ± 10 | ± 2 | 6 | 6 |
| | 800 ≤ 1 000 | 2 032 ≤ 2 540 | ± 2 | ± 13 | ± 2 | 6 | 6 |
| | 1 000 ≤ 1 060 | 2 540 ≤ 2 692 | ± 2 | ± 15 | ± 2 | 6 | 6 |
| | 1 120 ≤ 1 400 | 2 845 ≤ 3 556 | ± 2 | ± 15 | ± 2 | 10* | 10 |
| | 1 500 ≤ 1 900 | 3 810 ≤ 4 826 | ± 2 | ± 20 | ± 2 | | 10 |
| | 2 000 ≤ 2 360 | 5 080 ≤ 5 994 | ± 4 | ± 20 | ± 4 | | 10 |
| | 2 500 ≤ 3 000 | 6 350 ≤ 7 620 | ± 4 | ± 20 | ± 4 | | 16 |
| | 3 150 ≤ 3 750 | 8 001 ≤ 9 525 | ± 6 | ± 25 | ± 6 | | 16 |
| | 4 000 | 10 160 | ± 8 | ± 25 | ± 8 | | 16 |
| | 4 250 ≤ 4 500 | 10 795 ≤ 11 430 | ± 8 | ± 30 | ± 8 | | 16 |
| | 4 750 ≤ 5 000 | 12 065 ≤ 12 700 | ± 12 | ± 30 | ± 12 | | 24 |

*Table 73: Double section V-belts*

| Section | Reference length (mm) | Length tolerance (mm) Permissible deviation of the reference lengths | Set tolerance (mm) Permissible difference between the reference lengths of the double section V-belts in one and the same set on multiple belt drives |
|---|---|---|---|
| AA / HAA BB / HBB CC / HCC DD / HDD 22 x 22 25 x 22 | 1 250 < 1 320 | + 8 / – 16 | 4.0 |
| | 1 320 < 1 700 | + 9 / – 18 | 4.0 |
| | 1 700 < 2 120 | + 11 / – 22 | 5.0 |
| | 2 120 < 2 650 | + 13 / – 26 | 6.3 |
| | 2 650 < 3 350 | + 15 / – 30 | 8.0 |
| | 3 350 < 4 250 | + 18 / – 36 | 10.0 |
| | 4 250 < 5 300 | + 22 / – 44 | 12.5 |
| | 5 300 < 6 700 | + 26 / – 52 | 16.0 |
| | 6 700 < 8 500 | + 32 / – 64 | 20.0 |
| | 8 500 < 10 000 | + 39 / – 78 | 25.0 |

*Table 74: Kraftbands with high-performance wedge belts and classical V-belts*

| Section | Length and set tolerances |
|---|---|
| 3V / 9J; 3VX / 9JX 5V / 15J; 5VX / 15JX 8V / 25J | USA-Standard RMA / MPTA |
| SPZ; SPA; SPB; SPC | DIN / ISO |
| A / HA B / HB C / HC D / HD | DIN / ASAE |



* Maximum production length for raw edge V-belts ≤ 3550 mm.

# Tables
## Conversion Factors

### Optibelt SK high-performance wedge belts DIN 7753 Part 1

| Section | Cross-section b x h ≈ | Section base width $b_u$ ≈ | Datum width $b_d$ | Belt length: Nominal-length | Belt length: Outside length $L_a$ | Belt length: Datum length $L_d$ | Belt length: Inside length $L_i$ | Recommended minimum pulley diameter (mm) | | Belt weight (≈ kg/m) |
|---|---|---|---|---|---|---|---|---|---|---|
| SPZ | 9.7 x 8 | 4.2 | 8.5 | Datum length $L_d$ | $L_a \approx L_d + 13$<br>$L_a \approx L_i + 51$ | — | $L_i \approx L_d - 38$<br>$L_i \approx L_a - 51$ | Datum diameter $d_d$ | 63 | 0.074 |
| SPA | 12.7 x 10 | 5.8 | 11.0 | | $L_a \approx L_d + 18$<br>$L_a \approx L_i + 63$ | — | $L_i \approx L_d - 45$<br>$L_i \approx L_a - 63$ | | 90 | 0.123 |
| SPB | 16.3 x 13 | 7.3 | 14.0 | | $L_a \approx L_d + 22$<br>$L_a \approx L_i + 82$ | — | $L_i \approx L_d - 60$<br>$L_i \approx L_a - 82$ | | 140 | 0.195 |
| SPC | 22.0 x 18 | 9.6 | 19.0 | | $L_a \approx L_d + 30$<br>$L_a \approx L_i + 113$ | — | $L_i \approx L_d - 83$<br>$L_i \approx L_a - 113$ | | 224 | 0.377 |

### Optibelt SK high-performance wedge belts USA Standard RMA/MTPA

| | | | | | | | | | | |
|---|---|---|---|---|---|---|---|---|---|---|
| 3V/9N | 9.0 x 8 | 4.2 | — | Outside length $L_a$ | — | $L_d \approx L_a - 4$* | $L_i \approx L_a - 42$ | Outside diamter $d_a$ | 63 | 0.074 |
| 5V/15N | 15.0 x 13 | 7.3 | — | | — | $L_d \approx L_a - 11$* | $L_i \approx L_a - 71$ | | 140 | 0.195 |
| 8V/25N | 25.0 x 23 | 9.6 | — | | — | — | $L_i \approx L_a - 120$ | | 335 | 0.575 |

* The conversion factors $L_d$ to $L_a$ is used when a section according to DIN 7753 Part 1 is to be replaced by the corresponding section according to RMA/MPTA.

### Optibelt Super TX M=S wedge belts – raw edge, moulded cogged – DIN 7753 Part 1

| | | | | | | | | | | |
|---|---|---|---|---|---|---|---|---|---|---|
| XPZ | 9.7 x 8 | 4.2 | 8.5 | Datum length $L_d$ | $L_a \approx L_d + 13$<br>$L_a \approx L_i + 51$ | — | $L_i \approx L_d - 38$<br>$L_i \approx L_a - 51$ | Datum diameter $d_d$ | 56 | 0.065 |
| XPA | 12.7 x 10 | 5.8 | 11.0 | | $L_a \approx L_d + 18$<br>$L_a \approx L_i + 63$ | — | $L_i \approx L_d - 45$<br>$L_i \approx L_a - 63$ | | 71 | 0.111 |
| XPB | 16.3 x 13 | 7.3 | 14.0 | | $L_a \approx L_d + 22$<br>$L_a \approx L_i + 82$ | — | $L_i \approx L_d - 60$<br>$L_i \approx L_a - 82$ | | 112 | 0.183 |
| XPC | 22.0 x 18 | 9.6 | 19.0 | | $L_a \approx L_d + 30$<br>$L_a \approx L_i + 113$ | — | $L_i \approx L_d - 83$<br>$L_i \approx L_a - 113$ | | 180 | 0.340 |

### Optibelt Super TX M=S wedge belts – raw edge, moulded cogged – USA Standard RMA/MTPA

| | | | | | | | | | | |
|---|---|---|---|---|---|---|---|---|---|---|
| 3VX/9NX | 9.0 x 8 | 4.2 | — | Outside length $L_a$ | — | $L_d \approx L_a - 4$* | $L_i \approx L_a - 42$ | Outside diamter $d_a$ | 56 | 0.065 |
| 5VX/15NX | 15.0 x 13 | 7.3 | — | | — | $L_d \approx L_a - 11$* | $L_i \approx L_a - 71$ | | 112 | 0.183 |

* The conversion factors $L_d$ to $L_a$ is used when a section to BS 3790 or DIN 7753 Part 1 is to be replaced by the corresponding section to RMA/MPTA.

### Optibelt Super TX M=S V-belts – raw edge, moulded cogged

| | | | | | | | | | | |
|---|---|---|---|---|---|---|---|---|---|---|
| ZX/X10 | 10.0 x 6 | 5.9 | 8.5 | Datum length $L_d$ | $L_a \approx L_i + 38$<br>$L_a \approx L_d + 16$ | — | $L_i \approx L_d - 22$<br>$L_i \approx L_a - 38$ | Datum diameter $d_d$ | 40 | 0.062 |
| AX/X13 | 13.0 x 8 | 7.5 | 11.0 | | $L_a \approx L_i + 50$<br>$L_a \approx L_d + 20$ | — | $L_i \approx L_d - 30$<br>$L_i \approx L_a - 50$ | | 63 | 0.099 |
| BX/X17 | 17.0 x 11 | 9.4 | 14.0 | | $L_a \approx L_i + 69$<br>$L_a \approx L_d + 29$ | — | $L_i \approx L_d - 40$<br>$L_i \approx L_a - 69$ | | 90 | 0.165 |
| CX/X22 | 22.0 x 14 | 12.3 | 19.0 | | $L_a \approx L_i + 88$<br>$L_a \approx L_d + 30$ | — | $L_i \approx L_d - 58$<br>$L_i \approx L_a - 88$ | | 140 | 0.276 |

### Optibelt VB classical V-belts DIN 2215

| | | | | | | | | | | |
|---|---|---|---|---|---|---|---|---|---|---|
| 5 | 5.0 x 3 | 2.8 | 4.2 | Datum length $L_d$ | $L_a \approx L_i + 19$<br>$L_a \approx L_d + 8$ | $L_d \approx L_i + 11$<br>$L_d \approx L_a - 8$ | — | Datum diameter $d_d$ | 20 | 0.018 |
| Y/6 | 6.0 x 4 | 3.3 | 5.3 | | $L_a \approx L_i + 25$<br>$L_a \approx L_d + 10$ | $L_d \approx L_i + 15$<br>$L_d \approx L_a - 10$ | — | | 28 | 0.026 |
| 8 | 8.0 x 5 | 4.5 | 6.7 | | $L_a \approx L_i + 31$<br>$L_a \approx L_d + 12$ | $L_d \approx L_i + 19$<br>$L_d \approx L_a - 12$ | — | | 40 | 0.042 |
| Z/10 | 10.0 x 6 | 5.9 | 8.5 | | $L_a \approx L_i + 38$<br>$L_a \approx L_d + 16$ | $L_d \approx L_i + 22$<br>$L_d \approx L_a - 16$ | — | | 50 | 0.064 |
| A/13 | 13.0 x 8 | 7.5 | 11.0 | | $L_a \approx L_i + 50$<br>$L_a \approx L_d + 20$ | $L_d \approx L_i + 30$<br>$L_d \approx L_a - 20$ | — | | 71 | 0.109 |
| B/17 | 17.0 x 11 | 9.4 | 14.0 | | $L_a \approx L_i + 69$<br>$L_a \approx L_d + 29$ | $L_d \approx L_i + 40$<br>$L_d \approx L_a - 29$ | — | | 112 | 0.196 |
| 20 | 20.0 x 12.5 | 11.4 | 17.0 | | $L_a \approx L_i + 79$<br>$L_a \approx L_d + 31$ | $L_d \approx L_i + 48$<br>$L_d \approx L_a - 31$ | — | | 160 | 0.266 |
| C/22 | 22.0 x 14 | 12.3 | 19.0 | | $L_a \approx L_i + 88$<br>$L_a \approx L_d + 30$ | $L_d \approx L_i + 58$<br>$L_d \approx L_a - 30$ | — | | 180 | 0.324 |
| 25 | 25.0 x 16 | 14.0 | 21.0 | | $L_a \approx L_i + 100$<br>$L_a \approx L_d + 39$ | $L_d \approx L_i + 61$<br>$L_d \approx L_a - 39$ | — | | 250 | 0.420 |
| D/32 | 32.0 x 20 | 18.2 | 27.0 | | $L_a \approx L_i + 126$<br>$L_a \approx L_d + 51$ | $L_d \approx L_i + 75$<br>$L_d \approx L_a - 51$ | — | | 355 | 0.668 |
| E/40 | 40.0 x 25 | 22.8 | 32.0 | | $L_a \approx L_i + 157$<br>$L_a \approx L_d + 77$ | $L_d \approx L_i + 80$<br>$L_d \approx L_a - 77$ | — | | 500 | 0.958 |

# Tables
## Conversion Factors

### Optibelt KB Kraftbands with high-performance wedge belts to ISO 5290/USA Standard RMA/MTPA

| Section | Height * h ≈ | Lower belt width $b_u$ ≈ of the single belts | Belt length: Nominal length | Belt length: Outside length $L_a$ | Belt length: Datum length $L_d$ | Belt length: Inside length $L_i$ | Recommended minimum pulley diameter (mm) | | Rib weight (≈ kg/m) |
|---|---|---|---|---|---|---|---|---|---|
| 3V/9J | 9.9 | 4.2 | Outside length $L_a$ | — | — | $L_i \approx L_a - 42$ | Outside diameter $d_a$ | 67 | 0.122 |
| 5V/15J | 15.1 | 7.3 | | — | — | $L_i \approx L_a - 71$ | | 160 | 0.252 |
| 8V/25J | 25.5 | 9.6 | | — | — | $L_i \approx L_a - 120$ | | 315 | 0.693 |

### Optibelt KB Kraftbands with high-performance wedge belts

| | | | | | | | | | |
|---|---|---|---|---|---|---|---|---|---|
| SPZ | 10.5 | 5.4 | Datum length $L_d$ | $L_a \approx L_d + 13$ | — | — | Datum diameter $d_d$ | 80 | 0.120 |
| SPA | 12.5 | 7.0 | | $L_a \approx L_d + 18$ | — | — | | 112 | 0.166 |
| SPB | 15.6 | 8.8 | | $L_a \approx L_d + 22$ | — | — | | 180 | 0.261 |
| SPC | 22.6 | 9.3 | | $L_a \approx L_d + 24$ | — | — | | 250 | 0.555 |

### Optibelt KB Kraftbands USA Standard RMA/MTPA

| | | | | | | | | | |
|---|---|---|---|---|---|---|---|---|---|
| A | 9.9 | 7.5 | Datum lenth $L_d$ | $L_a \approx L_i + 36$ | $L_d \approx L_i + 30$ | — | Datum diameter $d_d$ | 80 | 0.163 |
| B | 13.0 | 9.4 | | $L_a \approx L_i + 62$ | $L_d \approx L_i + 40$ | — | | 125 | 0.266 |
| C | 16.2 | 12.3 | | $L_a \approx L_i + 75$ | $L_d \approx L_i + 58$ | — | | 200 | 0.447 |
| D | 22.4 | 18.2 | | $L_a \approx L_i + 111$ | $L_d \approx L_i + 75$ | — | | 355 | 0.798 |

### Optibelt KB Kraftbands USA Standard ASAE S 211. ...

| | | | | | | | | | |
|---|---|---|---|---|---|---|---|---|---|
| HA | 9.9 | 7.5 | Outside length $L_a$ | — | — | $L_i \approx L_a - 36$ | Outside diameter $d_a$ | 80 | 0.163 |
| HB | 13.0 | 9.4 | | — | — | $L_i \approx L_a - 62$ | | 125 | 0.266 |
| HC | 16.2 | 12.3 | | — | — | $L_i \approx L_a - 75$ | | 200 | 0.447 |
| HD | 22.4 | 18.2 | | — | — | $L_i \approx L_a - 111$ | | 355 | 0.798 |

* The width of the Kraftband is a function of the number of ribs.

### Optibelt DK double section V-belt DIN 7722/ISO 5289

| Section | Cross-section b x h ≈ | Section base width $b_u$ ≈ | Datum length | Belt length | Recommended minimum pulley diameter (mm) | | Belt weight (≈ kg/m) |
|---|---|---|---|---|---|---|---|
| AA/HAA | 13 x 10 | — | Reference length | Reference length ≈ mean length – 4 | Outside diameter $d_a$ | 80 | 0.150 |
| BB/HBB | 17 x 13 | — | | Reference length ≈ mean length – 8 | | 125 | 0.250 |
| CC/HCC | 22 x 17 | — | | Reference length ≈ mean length + 3 | | 224 | 0.440 |
| DD/HDD | 32 x 25 | — | | Reference length = mean length | | 355 | 0.935 |

### Optibelt DK double section V-belt DIN 7722/ISO 5289s

| | | | | | | | |
|---|---|---|---|---|---|---|---|
| 22 x 22 | 22 x 22 | — | Reference length | Reference length = mean length | Outside diameter $d_a$ | 280 | 0,511 |
| 25 x 22 | 25 x 22 | — | | Reference length = mean length | | 280 | 0,625 |

### Optibelt FB automotive fan belts

| Section | Cross-section b x h ≈ | Section base width $b_u$ ≈ | Datum width $b_d$ | Belt length: Nominal length | Belt length: Outside length $L_a$ | Belt length: Datum length $L_d$ | Belt length: Inside length $L_i$ | Recommended minimum pulley diameter (mm) | Belt weight (≈ kg/m) |
|---|---|---|---|---|---|---|---|---|---|
| 9.5 | 10 x 8 | 4.9 | 8.5 | Outside length $L_a$ | — | $L_d \approx L_a - 13$ | $L_i \approx L_a - 51$ | Agreed between vehicle and belt manufacturers | 0.070 |
| 12.5 | 13 x 10 | 5.8 | 11.0 | | — | $L_d \approx L_a - 18$ | $L_i \approx L_a - 63$ | | 0.118 |

### Optibelt Marathon 1/Marathon 2 M=S automotive V-belts – raw edge, moulded cogged, service free

| | | | | | | | | | |
|---|---|---|---|---|---|---|---|---|---|
| AVX 10 | 10 x 8 | 4.9 | 8.5 | Outside length $L_a$ | — | $L_d \approx L_a - 13$ | $L_i \approx L_a - 51$ | Agreed between vehicle and belt manufacturers | 0.076 |
| AVX 13 | 13 x 10 | 5.8 | 11.0 | | — | $L_d \approx L_a - 18$ | $L_i \approx L_a - 63$ | | 0.118 |

# Special Purpose Conveyor Belts
## Product Description

Optibelt have developed a series of special purpose conveyor belts for the economical transportation of goods in a varied range of applications.

- Optibelt PKR endless V-belts according to DIN 2215 with patterned top surfaces
- Optibelt PKR endless V-belts according to DIN 2215 with light coloured fabric cover and patterned top surfaces within the standard belt height
- Optibelt KB Kraftbands with patterned top surfaces
- Optibelt PKR open ended V-belts to DIN 2216 with patterned top surfaces
- Optibelt FK open ended conveyor belting, punched
- Optimax HF high-performance flat belts

### Construction / Quality

Special purpose conveyor elements are used in place of expensive conventional type conveyor belts. They run individually, or in sets adjacent to each other, transporting goods horizontally, or up or down inclines. Vertical conveying is also possible if the belts are arranged top surface to top surface gripping the articles between them.

*Table 71*

| Design / Colour | Temperature resistance (°C) | Hardness (Shore A) | Oil resistance | Marking |
|---|---|---|---|---|
| SBR-NR / light coloured | – 40 to + 70 | ≈ 55/65* | no | no |
| CR / black | – 25 to + 100 | ≈ 65 | limited | yes |

CR / black is supplied as standard. We would be pleased to supply details of other designs.

SBR = styrene butadiene rubber
NR = natural rubber
CR = chloroprene rubber
* = 55 for surface over the standard height
* = 65 for surface within the standard height

### Properties

Special surfaced belts are used in place of expensive conventional type conveyor belts. They run individually, or in sets arranged adjacent to each other, transporting goods horizontally, or up or down inclines. Vertical conveying is also possible if the belts are arranged top surface to top surface gripping the articles between them.

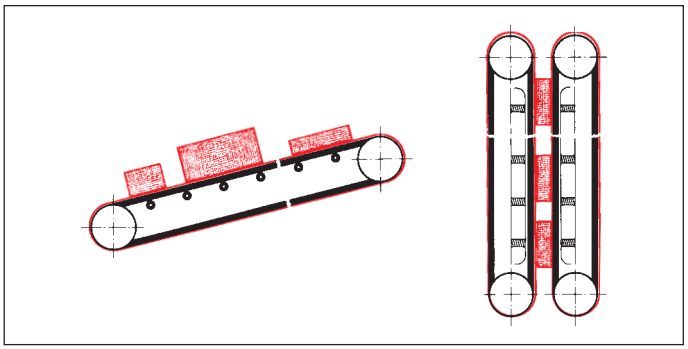

### Applications

Here are just a few examples from the wide range of applications in which Optibelt conveyor belts are used successfully.

For transporting:

- doors, cupboard components, veneer and plastic panels in the woodworking industry
- body parts and sharp-edged sheet metal panels in the automobile industry
- cardboard and boxes in the packaging industry
- roof tiles, concrete slabs and paviors in cement works
- tiles
- sheet glass
- parcels
- bowling alley balls

In addition to conveyor applications, these belts are also used for:

- labelling and closing tins, bottles and jars in the preserves industry
- lifting, topping and sorting beet, potatoes, lettuce, cauliflower and sprouts and many other vegetables

Because of their single belt characteristics and high permissible surface loading, Optibelt KB Kraftbands are especially suitable in conveyor systems and lifting platforms for:

- transporting cargo containers
- loading and unloading aeroplanes and railway wagons
- stowing and discharging ships cargoes

*Optibelt KB with top surface*

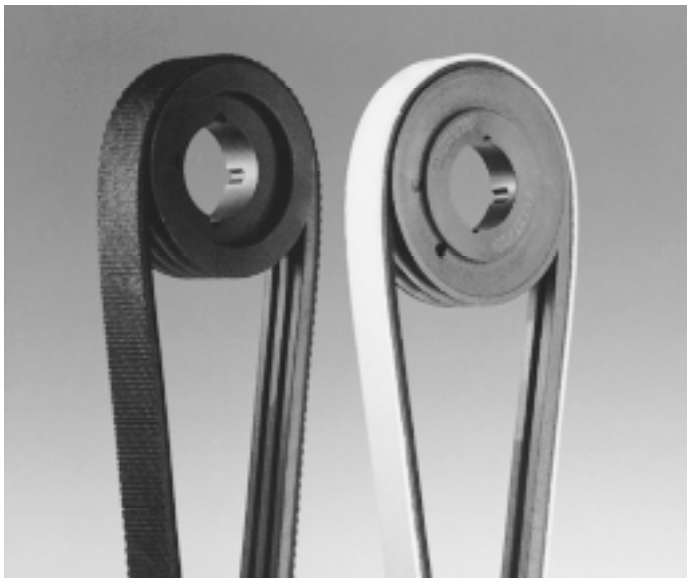

# Special Purpose Conveyor Belts
## Design Guidelines

### Drive and Guide Pulleys

The drive and guide pulleys should be V-grooved pulleys. The minimum diameters should be selected in accordance with the standard recommendations for V-belts and Kraftbands. See the chapter on V-pulleys.

Due to the relatively low transporting speed (experience shows that it is usually less than 1 m/s) and the resulting low flex rate, pulley diameters can be reduced to approx. 10% below the recommended minimum. With greater reduction, there is the danger that the top surface separates from the base V-belt.

The driver pulley should be arranged at the discharge end of the conveyor so that the goods are pulled along.

### Support Rollers / Tracks

In most cases, support rollers or tracks are required to prevent the belt from sagging under load.

Support rollers may be flat faced or V-pulleys. The dimensions of the pulley grooves should be such that the conveyor belt is supported at its base in the groove ground, and can only run with one edge along the pulley, and as a consequence does not become trapped in the groove.

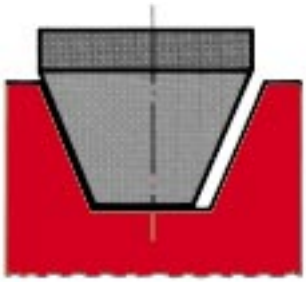

The diameter and the number of support rollers required depends upon the length of the conveying span and the weight and size of the goods to be transported.

Support tracks, generally made of plastic, are either flat or with a key seat to improve guidance of the conveyor belt. Like it is the case with the support rollers, the grooves must be of an adequate width.

### Adjustment of the drive centre distance allowances

The tables on pages 76 and 77 show the drive centre distance allowances applicable to special purpose conveyor belts and Kraftbands.

### Options for Tensioning

An adequate belt tension is essential to the reliable operation of the conveyor system. Tension is applied by adjusting the drive centre distance or, when the centres are fixed, by the use of tension idlers.

When idlers are employed, they should be arranged inside the belt if possible, as otherwise the alternating flexing of the belt will reduce its service life.

## optibelt *KB* Kraftbands with patterned top surface

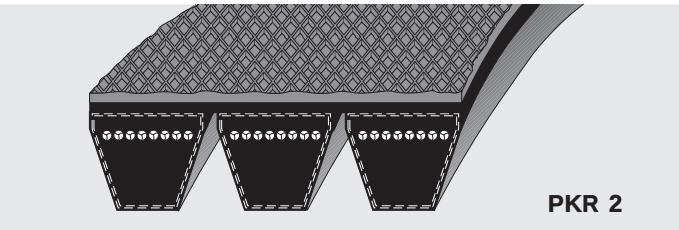


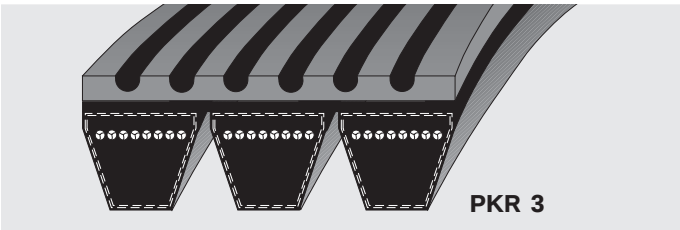


| Pattern | Height of surface Standard (mm) | Height of surface maximal (mm) | Pitch (mm) | Groove width (mm) |
|---|---|---|---|---|
| PKR 0 | 3 | 5 | — | — |
| PKR 1 | 3 | 5 | 10 | — |
| PKR 2 | 3 | 5 | — | — |
| PKR 3 | 5 | — | — | 3.7 |

| Design/Colour | Temperature resistance (°C) | Hardness (Shore A) | Oil resistance | Marking |
|---|---|---|---|---|
| SBR-NR/light | - 40 to + 70 | ≈ 55 | no | no |
| CR/black | - 25 to + 100 | ≈ 65 | limited | yes |

SBR = styrene butadiene rubber
NR = natural rubber
CR = chloroprene rubber

*Table 75*

| Section | Cross-sectional dimensions of the base belt (mm) | Kraftband height without top surface (mm) | Length designation | Length (mm) | Max. production length (mm) | Pattern type PKR 0 | PKR 1 | PKR 2 | PKR 3 |
|---|---|---|---|---|---|---|---|---|---|
| **3V/9J** | 9 x 8 | 9.9 | 500 ≤ 1 400 | 1 400 ≤ 3 556 $L_a$ | 4 250 | ● | ● | ● | — |
| **5V/15J** | 15 x 13 | 15.1 | 500 ≤ 3 550 | 1 400 ≤ 9 017 $L_a$ | 10 000 | ● | ● | ● | — |
| **8V/25J** | 25 x 23 | 25.5 | 1 000 ≤ 4 750 | 2 540 ≤ 12 065 $L_a$ | 15 000 | ● | ● | ● | — |
| **SPB** | 16.3 x 13 | 15.6 | — | 2 400 ≤ 6 000 $L_d$ | 6 000 | ● | ● | ● | — |
| **A/HA** | 13 x 8 | 9.9 | — | 1 400 ≤ 5 000 $L_i$ | 8 000 | ● | ● | ● | — |
| | | | | 2 850 ≤ 8 000 $L_i$ | on request | — | — | — | ● |
| **B/HB** | 17 x 11 | 13.0 | — | 1 400 ≤ 7 100 $L_i$ | 10 000 | ● | ● | ● | — |
| **C/HC** | 22 x 14 | 16.2 | — | 2 286 ≤ 7 100 $L_i$ | 12 000 | ● | ● | ● | — |

$L_a$ = outside length; $L_i$ = inside length; $L_d$ = datum length.

**Range: see page 29/30. Minimum order quantity on request.**

optibelt
Power Transmission

# Special Purpose Conveyor Belts

## optibelt *PKR* Endless V-Belts with Patterned Top Surface

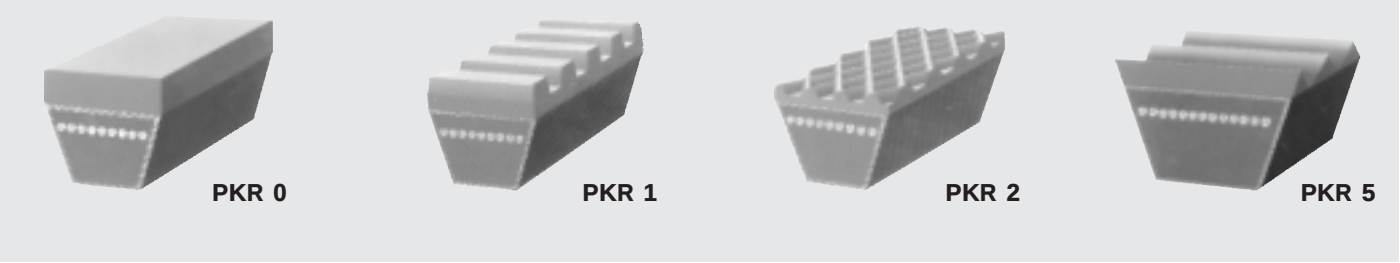


*Table 76*

| Pattern | Height of top surface Standard (mm) | Height of top surface maximal (mm) | Pitch (mm) | Groove width (mm) |
|---|---|---|---|---|
| **PKR 0** | 3 | 5 | – | – |
| **PKR 1** | 3 | 5 | 10 | – |
| **PKR 2** | 3 | 5 | – | – |
| **PKR 5** | 5 | – | 13 | – |

*Table 77*

| Design / Colour | Temperature resistance (° C) | Hardness (Shore A) | Oil resistance | Marking |
|---|---|---|---|---|
| SBR-NR / light | - 40 to + 70 | ≈ 55/65* | no | no |
| CR / black | - 25 to + 100 | ≈ 65 | limited | yes |

SBR = styrene butadiene rubber
NR = natural rubber
CR = chloroprene rubber

* ≈ 55 for top surface above the standard height
* ≈ 65 for top surface within the standard height

*Table 78*

| Top surfaces above the standard height | | | | | | | Top surfaces 3 or 5 mm within the standard height | |
|---|---|---|---|---|---|---|---|---|
| Section | Standard height (mm) | Standard inside length (mm) | Pattern type PKR 0 | PKR 1 | PKR 2 | PKR 5 | Minimun order quantities for V-belts patterned top surfaces **PKR 0; PKR 1; PKR 2; PKR 5** **for standard-range** (as listed on pages 23 to 26) | **for intermediate length** (sizes not listed in this technical manual) |
| **A / 13** | 8.0 | 1 200 ≤ 5000[1] | ● | ● | ● | — | 18 pcs. | 31 pcs. |
| **B / 17** | 11.0 | 1 200 ≤ 2 000[1]<br>2 001 ≤ 7 100[1] | ●<br>● | ●<br>● | ●<br>● | —<br>— | 15 pcs.<br>15 pcs. | 50 pcs.<br>42 pcs. |
| **20** | 12.5 | 1 850 ≤ 2 000[2]<br>2 001 ≤ 8 000[2] | ●<br>● | ●<br>● | ●<br>● | —<br>— | 13 pcs.<br>13 pcs. | 21 pcs.<br>36 pcs. |
| **C / 22** | 14.0 | 1 850 ≤ 2 000[2]<br>2 001 ≤ 10 000[2] | ●<br>● | ●<br>● | ●<br>● | —<br>— | 12 pcs.<br>12 pcs. | 57 pcs.<br>48 pcs. |
| **25** | 16.0 | 1 850 ≤ 2 000[2]<br>2 001 ≤ 10 000[2] | ●<br>● | ●<br>● | ●<br>● | —<br>— | 11 pcs.<br>11 pcs. | 51 pcs.<br>42 pcs. |
| **D / 32** | 20.0 | 2 850 ≤ 12 500[2]<br>2 850 ≤ 12 500[2] | ●<br>— | ●<br>— | ●<br>— | —<br>●[3] | 9 pcs.<br>8 pcs. | 22 pcs.<br>8 pcs. |
| **E / 40** | 25.0 | — | — | — | — | — | on request | on request |

1) Maximum production length on request.
2) Maximum production length 21000 mm.
3) Only available in CR / black.
Section Z / 10 on request.

*Table 79*

| Top surface within the standard height | | | |
|---|---|---|---|
| Standard inside length (mm) | Pattern type PKR 0 | PKR 2 | Minimum quantitiy |
| 3 550 ≤10 000[1] | ● | ● | 10 |
| 2 850 ≤21 000[1] | ● | ● | 10 |
| 3 550 ≤21 000[1] | ● | ● | 8 |
| 3 550 ≤21 000[1] | ● | ● | 8 |
| 2 850 ≤21 000[1] | ● | ● | 8 |
| 2 850 ≤21 000[1] | ● | ● | 6 |
| 4 000 ≤21 000[1] | ● | ● | 5 |

When ordering, please state the overall height of the V-belt including top surface.
This is indicated by the section designation as follows.

Section B / 17 – top surface within the standard height = 17 x 11
Section B / 17 – with additional 3 mm top surface = 17 x 14
Section B / 17 – with additional 5 mm top surface = 17 x 16

optibelt
Power Transmission

# Special Purpose Conveyor Belts

## optimat *PKR* Open Ended V-Belting according to DIN 2216 with Patterned Top Surfaces

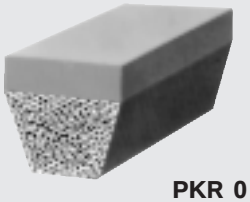

PKR 0

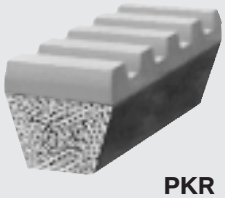

PKR 1

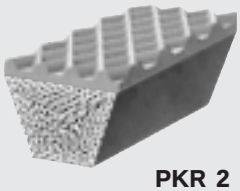

PKR 2

*Table 80*

| Section | PKR 0 CR/red brown | | PKR 0 SBR-NR/light coloured | | PKR 1 | | PKR 2 | |
|---|---|---|---|---|---|---|---|---|
| | S | P | S | P | S | P | S | P |
| **Z/10** | ● | ● | — | — | — | — | — | — |
| **A/13** | ● | ● | ● | ● | ● | ● | ● | ● |
| **B/17** | ● | ● | ● | ● | ● | ● | ● | ● |
| **C/22** | ● | ● | ● | ● | ● | ● | ● | ● |
| **25** | ● | ● | ● | ● | ● | ● | ● | ● |
| **D/32** | ● | ● | ● | ● | ● | ● | — | — |

S = Standard; P = Polyester

*Table 81*

| Pattern types | Top surface height | | Pitch |
|---|---|---|---|
| | Standard (mm) | Max. (mm) | (mm) |
| **PKR 0** | 2 | 3 | – |
| **PKR 1 A/13; B/17; C/22** | 3 | 3 | 10 |
| **PKR 1 25; D/32** | 5 | 5 | 10 |
| **PKR 2** | 3 | – | – |

*Table 82*

| Design/ Colour | Temperature resistance (° C) | Hardness (Shore A) | Oil resistance | Marking |
|---|---|---|---|---|
| **PKR 0** | | | | |
| CR/red brown | - 25 to + 100 | ≈ 50 | limited | no |
| SBR-NR/light coloured | - 40 to + 70 | ≈ 45 | no | no |
| **PKR 1 and PKR 2** | | | | |
| NR/red brown | - 40 to + 70 | ≈ 48 | no | no |
| SBR-NR/light coloured | - 40 to + 70 | ≈ 45 | no | no |
| CR/red brown | - 25 to + 100 | ≈ 50 | limited | no |
| CR/black | - 25 to + 100 | ≈ 68 | limited | yes |

# Special Purpose Conveyor Belts

## optibelt *RR* Plastic round section belting
## optibelt *KK* Plastic V-belting

| Section | Width x Height (mm) | Length of roll (m) | Diameter (mm) | Length of roll (m) | Weight (≈ kg/m) |
|---|---|---|---|---|---|
| 8 | 8 x 5 | 50 | 2 | 200 | 0.004 |
| Z/10 | 10 x 6 | 50 | 3 | 200 | 0.009 |
| A/13 | 13 x 8 | 50 | 4 | 200 | 0.016 |
| B/17 | 17 x 11 | 50 | 5 | 200 | 0.024 |
| C/22 | 22 x 14 | 25 | 6 | 100 | 0.035 |
| | | | 7 | 100 | 0.048 |
| | | | 8 | 100 | 0.064 |
| | | | 10 | 100 | 0.096 |
| | | | 12 | 50 | 0.132 |
| | | | 15 | 50 | 0.211 |

Optibelt RR round-section belting and Optibelt KK plastic V-belting are especially suited as transporting elements in the food industry, in ceramic industry plants, an for applications requiring oils and chemicals.

They can also be used as drive elements for specific ranges of capacity. Optibelt supplies different qualities that can be easily distinguished due to their different colours.

Minimum lengths for endless connection:

| | | |
|---|---|---|
| Round-Section belting: | | 200 mm |
| V-belting: | Section Z/10 to A/13: | 300 mm |
| | Section B/17: | 500 mm |
| | Section C/22: | 700 mm |

## optibelt *KK* plastic V-belting with profile surface (white, 92 Shore A)
## Plastic V-belting with pointed roof profile

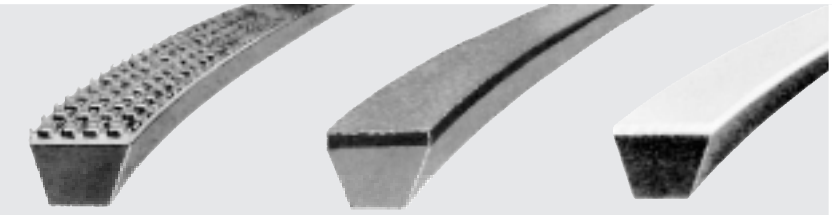

**Supergrip** **Linatex** **HV 2-Laminate**

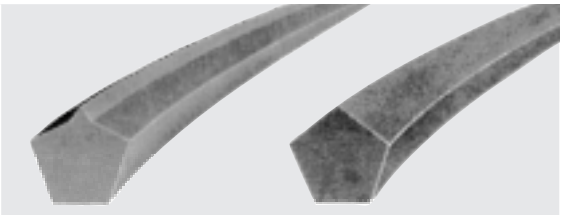

**Form 1** **Form 2**

| Section | Width x Hight (mm) | Length of roll (m) | Form | Section | Length of roll (m) |
|---|---|---|---|---|---|
| 8 | 8 x 5 | 50 | 1 | A/13 | 25 |
| Z/10 | 10 x 6 | 50 | 2 | A/13 | 25 |
| A/13 | 13 x 8 | 50 | 1 | B/17 | 25 |
| B/17 | 17 x 11 | 50 | 2 | B/17 | 25 |
| C/22 | 22 x 14 | 25 | 1 | C/22 | 25 |
| | | | 2 | C/22 | 25 |

# Table of Standards

## Federal Republic of Germany

DIN 109 Sheet 1 – Drive elements, circumferential speeds
DIN 109 Sheet 2 – Drive elements, drive centre distances for V-belt drives
DIN 111 – Flat belts; dimensions, nominal torque
DIN 111 Sheet 2 – Flat belts - specification for electrical machines
DIN 2211 Sheet 1 – V-belts; dimensions; material
DIN 2211 Sheet 2 – V-belts; testing the grooves
DIN 2211 Sheet 3 – Wedge belts; specification for electrical machines
DIN 2215 – Endless V-belts, classical sections; minimum pulley datum diameters, inside and datum belt lengths
DIN 2216 – Open ended V-belting; dimensions
DIN 2217 Sheet 1 – V-belt pulleys for classical sections; dimensions, material
DIN 2217 Sheet 2 – V-belt pulleys for classical sections; groove checking
DIN 2218 – Endless V-belts, classical sections for industrial engineering applications; drive design, power ratings
DIN 7716 – Natural and synthetic rubber products; storage, cleaning and maintenance requirements
DIN 7719 Part 1 – Endless variable speed belts for industrial speed changers; belts and groove sections of the corresponding pulleys
DIN 7719 Part 2 – Endless variable speed belts for industrial speed changers; measuring the shaft centre distance fluctuation
DIN 7721 Part 1 – Synchronous belt drives, metric pitch; timing belts
DIN 7721 Part 2 – Synchronous belt drives, metric pitch; tooth profile for synchronous pulleys
DIN 7722 – Endless hexagonal belts for agricultural machinery and groove sections of the corresponding pulleys
DIN 7753 Part 1 – Endless wedge belts for industrial engineering applications; dimensions
DIN 7753 Part 2 – Endless wedge belts for industrial engineering applications; drive design and power ratings
DIN 7753 Part 3 – Endless wedge belts for automotive engineering applications; dimensions
DIN 7753 Part 4 – Endless wedge belts for automotive engineering applications; fatigue testing
DIN 7867 – Ribbed belts and pulleys
DIN/ISO 5210 – Joined wedge belts; sections 9J; 15J; 20J; 25J
DIN/ISO 5294 – Timing belt drives; pulleys
DIN/ISO 5296 – Timing belt drives; belts

## ISO International Organisation for Standardisation

ISO 22 – The widths of flat belts and corresponding pulleys
ISO 63 – Flat belt drives; lengths
ISO 99 – Diameter of pulleys for flat belts
ISO 100 – Crown height of pulleys for flat belts
ISO 155 – Drive pulleys; limits for setting drive centre distances
ISO 254 – Type, quality and balancing of pulleys
ISO 255 – Pulleys for classical V-belts and wedge belts; geometrical groove checking
ISO 1081 – Drives with V-belts and grooved pulleys; terminology
ISO 1604 – Endless variable speed belts and pulleys for industrial engineering applications
ISO 1813 – Endless V-belts; electrical conductivity
ISO 2230 – See DIN 7716
ISO 2790 – Wedge belt drives for the automotive industry; dimensions
ISO 3410 – Endless variable speed belts and pulleys for agricultural applications
ISO 4183 – Grooved pulleys for classical V-belts and wedge belts
ISO 4184 – Classical V-belts and wedge belts; lengths
ISO 5256 – Synchronous belt drive; belt tooth pitch coding
Part 1 MXL; XL; L; H; XH; XXH
Part 2 MXL; XXL metric sizes
ISO 5287 – Wedge belt drives for the automotive industry; fatigue testing
ISO 5288 – Timing belt drives; definitions
ISO 5289 – Endless double section belts and pulleys for agricultural applications
ISO 5290 – Joined wedge belt pulleys;
groove sections 9J; 15J; 20J; 25J;
ISO 5291 – Joined classical V-belt pulleys;
groove sections AJ; BJ; CJ; DJ
ISO 5292 – Industrial V-belt drives; calculating ratings and drive centre distances
ISO 5294 – Synchronous belt drives; pulleys
ISO 5295 – Timing belts; calculating ratings and drive centre distances
ISO 5296 – Synchronous belt drives; belts
ISO 8370-1 – Dynamic testing for determining the effective area with V-belts
ISO 8370-2 – Dynamic testing for determining the effective area with ribbed belts
ISO/DIS 8419 – Joined wedge belt drives, lengths in the datum system
ISO/CD 9010 – Synchronous belt drives - belts for the automotive industry
ISO/CD 9011 – Synchronous belt drives - pulleys for the automotive industry
ISO 9563 – Anti-static endless timing belts; electrical conductivity; characteristics and test methods
ISO 9980 – Belt drives; V-belt pulleys; checking the geometry of the pulley grooves
ISO 9981 – Belt drives - pulleys and ribbed belts for the automotive industry; section PK
ISO 9982 – Belt drives - pulleys and ribbed belts for industrial applications; geometric data PH, PJ, PK, PL and PM
ISO 9982 – See DIN 7867

## Australia – Employs the same Standards as the United Kingdom

## Austria

ÖNORM M 6504 – V-belt pulleys for classical V-belts, groove sections, material
ÖNORM M 6506 – Wedge belt pulleys; groove sections, material
ÖNORM M 6516 – V-belt drives; calculation, selection diagram
ÖNORM M 6516 – V-belt drives; calculation
Appendix
ÖNORM DIN 2215 – Endless V-belts; dimensions

## Belgium

NBN E 24-001 – V-belt and pulley drives; terminology and explanations
NBN E 24-002 – Endless V-belts with classical sections; electrical conductivity
NBN E 24-003 – Endless V-belts with classical sections and V-belt pulleys for industrial applications
NBN E 24-004 – Endless wedge belts and V-belt pulleys for industrial applications
NBN E 24-005 – Endless variable speed belts and pulleys for industrial applications
NBN E 24-006 – Endless wedge belts and pulleys for the automotive industry
NBN E 24-007 – Endless flat belts and pulleys
NBN E 24-009 – Endless variable speed belts and pulleys for agricultural applications
NBN E 24-010 – Double section belts and pulleys for agricultural applications
NBN E 24-011 – V-belt pulleys for banded belts with wedge belts

## Countries of the former USSR

GOST 1284-57 – Endless classical section V-belts; V-belt pulleys
GOST 5813-64 – Endless V-belts and pulleys for automotive engines, tractors and agricultural machinery

## Denmark

DS/ISO 254 – Type, quality and balancing of pulleys
DS 2104 – V-belt pulleys for classical and wedge belts; checking the grooves
DS 2106 – V-belt pulleys; material, quality, balancing
DS 2107 – V-belt pulleys for classical sections; pulley types
DS 2108 – V-belt drives; allowances for drive centre adjustment
DS/ISO 5287 – Wedge belt drives for the automotive industry; fatigue testing
DS/ISO 5289 – Endless double section belts and pulleys for agricultural machinery applications
DS/ISO 5294 – Synchronous belt drives; pulleys
DS/ISO 5296 – Synchronous belt drives; belts

## Finland

SFS 2491 – Endless classical section V-belts; sizes, lengths
SFS 2492 – Endless classical section V-belts; cross section checking
SFS 2493 – Endless classical section V-belts; drive calculation

# Table of Standards

| | |
|---|---|
| SFS 2494 | – Classical section belt pulleys; sizes, diameters |
| SFS 2495 | – Classical section belt pulleys; checking the grooves |
| SFS 2496 | – V-belt pulleys; material, balancing |
| SFS 3523 | – Endless wedge belts, V-belt pulleys and terminology |
| SFS 3524 | – Endless wedge belts; sizes, lengths |
| SFS 3525 | – Endless wedge belts; length measurement |
| SFS 3526 | – Wedge belt pulleys; sizes, diameters |
| SFS 3527 | – Endless wedge belts; drive calculation |

## France

| | |
|---|---|
| NF E 24-002 ISO 254 | – Type, quality and balancing of belt pulleys |
| NF E 24-209 ISO 255 | – Pulleys for classical V-belts and wedge belts; geometrical checking of the grooves |
| NF E 24-211 ISO4183 | – Grooved pulleys for classical V-belts and wedge belts |
| NF E 24-212 ISO4184 | – Classical V-belts and wedge belts; lengths |
| NF E 24-213 | – V-belt drives - classical V-belts and wedge belts; cross-section checking |
| NF E 24-220/ISO5290 | – Joined wedge belt pulleys; groove sections 9J; 15J; 25J |
| NF E 24-232/ISO1604 | – Endless variable speed belts and pulleys for industrial applications |
| NF E 24-301/ISO5296 | – Synchronous belt drives; belts |
| NF E 24-302/ISO5294 | – Synchronous belt drives; pulleys |
| NF E 24-402/ISO9982 | – Belt drives; pulleys and ribbed belts for industrial applications; geometrical data PH; PJ; PK; PL and PM |
| NF T 47-104 | – Endless V-belts, electrical conductivity, sections Y; Z; A; B; C; D; E; SPZ; SPA; SPB; SPC |
| NF T 47-123 | – Drives with V-belts and grooved pulleys; terminology |

## United Kingdom

| | |
|---|---|
| BS 3733 | – Endless classical section V-belts for agricultural applications |
| BS 3790 | – Drives with endless wedge belts and V-belts |
| BS AU 150 | – Endless wedge belts for the automotive industry |

## Israel

| | |
|---|---|
| S.I. 429 | – Endless V-belts for motor vehicles |

## Italy

| | |
|---|---|
| UNI 5265 | – Classical section endless V-belts; cross-section dimensions |
| UNI 5266 | – Classical section V-belt pulleys |
| UNI 7509 | – Classical section endless V-belts; electrical conductivity |

## Japan

| | |
|---|---|
| JASO E 105/106 | – Timing belts and pulleys for the automotive industry |
| JASO E 107/108 | – V-belts and pulleys for the automotive industry |
| JIS B 1854 | – V-belt pulleys for classical V-belts |
| JIS B 1855 | – V-belt pulleys for wedge belts |
| JIS K 6323 | – Endless classical section V-belts |

## Netherlands

| | |
|---|---|
| NEN 1725 | – Endless wedge belts and corresponding pulleys; dimensions for sections SPZ; SPA and SPB |
| NEN 1727 | – Endless V-belts and corresponding pulleys; dimensions for sections Y; Z; Z; B; C; D; E |

In addition the ISO Standards apply.

## Poland

| | |
|---|---|
| PN-66 M 85201 | – Classical section endless V-belts; V-belt pulleys |

## Spain

| | |
|---|---|
| UNE 18006 | – Classical V-belts; dimensions |
| UNE 18007 | – Flat belts and pulleys; dimensions |
| UNE 18009 | – Pulleys for classical V-belts; dimensions |
| UNE 18077 | – Flat belt pulleys; dimensions |
| UNE 18086 | – Classical V-belts, cross section checking |
| UNE 18102 | – Drive pulleys |
| UNE 18107 | – V-belts; technology |
| UNE 18108 | – V-belts for classical sections; groove checking |
| UNE 18117 | – V-belt pulleys; production, machining |

## Sweden

| | |
|---|---|
| SMS 979 | – Endless flat belts and pulleys; dimensions |
| SMS 2475 | – V-belt pulleys; types; balancing |
| SMS 2476 | – Endless classical section V-belts; drive calculation |
| SMS 2477 | – Endless classical section V-belts; dimensions, lengths |
| SMS 2479-2485 | – Endless classical section V-belts; ratings |
| SMS 2489 | – Endless classical section V-belts; cross section checking |
| SMS 2490 | – Endless classical section V-belts; length measurement |
| SMS 2491 | – Classical section V-belt pulleys; dimensions |
| SMS 2492 | – Classical section V-belt pulleys; diameters, drive ratios |
| SMS 2493 | – Classical section V-belt pulleys; checking the grooves |
| SMS 2494 | – V-belt pulleys, sizing |
| SMS 2500 | – V-belts and V-belt pulleys; terminology |
| SMS 2516 | – Endless wedge belts; sections SPZ; SPB; SPC; cross sections, lengths |
| SMS 2517 | – Endless wedge belts; sections SPZ; SPB; SPC; length measurement |
| SMS 2518 | – Wedge belt pulleys; sections SPZ; SPB; SPC; dimensions |
| SMS 2565 | – Endless variable speed belts for industrial applications; sections, lengths |
| SMS 2566 | – Endless variable speed belts for industrial applications; length and section measurement |
| SMS 2567 | – V-belt pulleys for endless variable speed belts for industrial applications |

## Switzerland

| | |
|---|---|
| VSM 15425 | – Belt pulleys for classical sections and wedge belts; groove sections, diameters |
| VSM 15426 | – Endless classical V-belts and endless wedge belts; sections and belt lengths |

## USA

| | |
|---|---|
| RMA/MPTA IP-20 | – Classical Multiple V-Belts (A; B; C; D and E Cross Sections) |
| RMA/MPTA IP-21 | – Double (Hexagonal) Belts (AA; BB; CC; DD Cross Sections) |
| RMA/MPTA IP-22 | – Narrow Multiple V-belts (3V; 5V; and 8V Cross Sections) |
| RMA/MPTA IP-23 | – Light Duty V-Belts (2L; 3L; 4L and 5L Cross-Sections) |
| RMA/MPTA IP-24 | – Synchronous Belts (MXL; XL; L; H; XH and XXH Belt Sections) |
| RMA/MPTA IP-25 | – Variable Speed V-Belts (12 Cross-Sections) |
| RMA/MPTA IP-26 | – V-Ribbed Belts (PH; PJ; PL and PM Cross-Sections) |
| ASAE S 211. ... | – V-Belt Drives for Agricultural Machines |
| SAE J636b | – V-Belts and Pulleys for Automotive Applications |

## Yugoslavia

| | |
|---|---|
| JUS G. E2.053 | – Classical endless V-belts |
| JUS G. E2.054 | – Classical endless V-belts; length measurement |
| JUS G. E2.055 | – Classical endless V-belts; cross section measurement |
| JUS G. E2.057 | – Endless V-belts; types |
| JUS G. E2.063 | – Endless wedge belts; lengths |
| JUS G. E2.064 | – Endless wedge belts; sections |
| JUS G. E2.065 | – Endless wedge belts; cross section measurement |

optibelt
Power Transmission

# Data Sheet
## for Calculation / Check of Drive

Optibelt GmbH
Corveyer Allee 15
37671 Höxter / Germany
Tel. +49 (0)52 71 / 62-0
Fax +49 (0)52 71 / 6 22 00
info@optibelt.com
www.optibelt.com

Company

(stamp)

For test ☐ New drive ☐
For initial production ☐ Existing drive ☐
For series production ☐ Usage _____ belts / year

Fitted with:

| Number | Size | Manufacturer |
|---|---|---|
| | | |

### Prime Mover

Type (e.g. electric motor, diesel engine 3 cyl.) _____
Size of starting torque (e.g. $M_A = 1.8\ M_N$) _____
Method of starting (e.g. star delta) _____
Operational hours per day _____ hours
Number of starts _____ per hour ☐ per day ☐
Rational reverses _____ per minute ☐ per hour ☐
Power: P normal _____ kW
P maximal _____ kW
or maximum torque _____ Nm bei $n_1$ _____ r.p.m.
Speed $n_1$ _____ r.p.m.
Position of shafts: horizontal ☐ vertical ☐
angled ☐ ∢ _____ °
Maximum allowable shaft loading $S_{a\ max}$ _____ N
Datum or outside diameter of pulley:
$d_{d1}$ _____ mm $d_{a1}$ _____ mm
$d_{d1\ min}$ _____ mm $d_{a1\ min}$ _____ mm
$d_{d1\ max}$ _____ mm $d_{a1\ max}$ _____ mm
Pulley face width $b_{2\ max}$ _____ mm

### Driven Machine

Type (e.g. lathe, compressor) _____
Start: loaded ☐ unloaded ☐
Nature of load:: constant ☐ pulsating ☐
shock ☐
Rating: P normal _____ kW
P maximal _____ kW
or maximum torque _____ Nm bei $n_2$ _____ r.p.m.
Speed $n_2$ _____ r.p.m.
$n_{2\ min}$ _____ r.p.m.
$n_{2\ max}$ _____ r.p.m.
Maximum allowable shaft loading $S_{a\ max}$ _____ Newton
Datum or outside diameter of pulley:
$d_{d2}$ _____ mm $d_{a2}$ _____ mm
$d_{d2\ min}$ _____ mm $d_{a2\ min}$ _____ mm
$d_{d2\ max}$ _____ mm $d_{a2\ max}$ _____ mm
Pulley face width $b_{2\ max}$ _____ mm

Speed ratio i _____ $i_{min}$ _____ $i_{max}$ _____
Centre distance a _____ mm $a_{min}$ _____ mm $a_{max}$ _____ mm
Tension / guide pulleys: inside ☐ in drive slack side ☐
outside ☐ in drive tight side ☐
$d_d$ _____ mm V-Pulley ☐ movable ☐ (e.g. spring loaded)
$d_a$ _____ mm Flat pulley ☐ fixed ☐

**Operating Conditions:** Ambient temperature _____ °C minimum
_____ °C maximum

Exposure to oil ☐ (e.g. oil mist, droplets) _____
water ☐ (e.g. spray) _____
acid ☐ (type, concentration, temperature) _____
dust ☐ dust (type) _____

Special conditions: Where the drive is subjected to unusual conditions (e.g. inside or outside idler pulleys, three or multi-pulley drives, as well as drives with reverse rotational direction, sketches are required. Please use the back of this data sheet for sketches.

**Drive description:**

optibelt
Power Transmission

# Data Sheet
## for Calculating / Checking Conveyor Systems

Optibelt GmbH
Corveyer Allee 15
37671 Höxter / Germany
Tel. +49 (0)5271/ 62-0
Fax +49 (0)5271/ 62200
info@optibelt.com
www.optibelt.com

Company

(stamp)

For one off use ☐ New drive ☐
For series production ☐ Existing drive ☐
Usage _____ belts / year

Fitted with:

| Number | Section length | Top surface | Manufacturer |
|---|---|---|---|
| | | | |

### Prime Mover

Type (e.g. geared motor) _____
Size of starting torque (e.g. $M_A = 1.8\ M_N$) _____
Method of starting (e.g. star delta) _____
Start under load ☐ unloaded ☐
Operational hours per day _____ hours
Number of starts _____ per hour ☐ per day ☐
Power: P normal _____ kW
P maximum _____ kW
or maximum torque _____ Nm at $n_1$ _____ r.p.m.
Rotational speed $n_1$ _____ r.p.m.
Rotational speed $n_2$ _____ r.p.m.
Conveying speed min _____ m / min
max _____ m / min
Continuously variable yes ☐ no ☐
Maximum allowable shaft loading $S_{a\ max}$ _____ Newton
Datum or autside diameter of the driver pulley:
$d_{d1}$ _____ mm $d_{a1}$ _____ mm
$d_{d1\ min}$ _____ mm $d_{a1\ min}$ _____ mm
$d_{d1\ max}$ _____ mm $d_{a1\ max}$ _____ mm
Datum or outside diameter of the guide pulleys:
$d_{d2}$ _____ mm $d_{a2}$ _____ mm
$d_{d2\ min}$ _____ mm $d_{a2\ min}$ _____ mm
$d_{d2\ max}$ _____ mm $d_{a2\ max}$ _____ mm
Speed ratio i _____ $i_{min}$ _____ $i_{max}$ _____
Position of shafts: horizontal ☐ vertical ☐
angled ☐ ∢ _____ °
Overall width of the system _____ mm
Drive centre distance a _____ mm $a_{min}$ _____ mm $a_{max}$ _____ mm
Allowance for tensioning – mm _____ + mm
Tension / guide pulleys: inside ☐ outside ☐
$d_d$ _____ mm $d_a$ _____ mm

Supporting pulleys V-pulleys ☐ Flat pulleys ☐
Bearings plain ☐ ball ☐
Number _____ pieces
$d_d$ _____ mm $d_a$ _____ mm
Spacing t _____ pieces
Support rails flat ☐ V-grooved ☐
Material (e.g. steel. plastic) _____

### Material to be conveyed

Type (e.g. concrete slabs) _____
Condition of the corners round ☐ sharp ☐
Conditions of the contact surface rough ☐ smooth ☐
Conveyed horizontally ☐ vertically ☐
inclined ☐ ∢ _____ °
downwards ☐ upwards ☐
Dimensions l x w x h (mm) _____ x _____ x _____
Motion continuous ☐ cycled ☐
collected ☐

### Operating Conditions

Exposure to oil ☐ (e.g. oil mist, droplets) _____
water ☐ (e.g. spray) _____
acid ☐ (type, concentration, temperature) _____
dust ☐ (type) _____
In the open air yes ☐ no ☐

The space overleaf is provided for sketches of the drive arrangement. Please include the dimensions of all the pulleys and idlers used in the proposed design

© Arntz Optibelt Gruppe 414227/0401

**Notes on the proposed conveyor arrangement:**

No part of this publication may be reproduced without the prior permission of the publishers.
Copyright infringement will be prosecuted. Errors excepted.

The Optibelt offer is aimed exclusively at specialist distributors. Optibelt recommends that its products be used exclusively according to the instructions in the Optibelt documentations. Optibelt will not be held responsible it the products are used in any application for which it was not designed or manufactured. Optibelt would also like to point out its General Terms of Business.

**optibelt**

**Power Transmission**

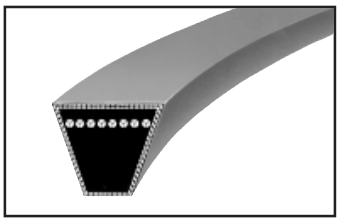

optibelt ***SK***
High performance wedge belts to BS 3790, DIN 7753 Part 1 and RMA / MPTA

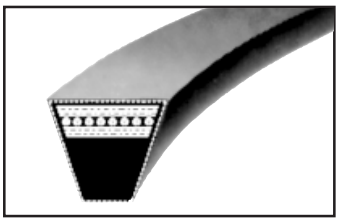

optibelt ***RED POWER II***
High performance wedge belts to BS 3790, DIN 7753 Part 1 and RMA / MPTA - service free

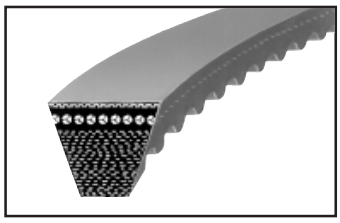

optibelt ***SUPER TX M=S***
Moulded cogged raw edge belts to BS 3790 and DIN 7753 Part 1

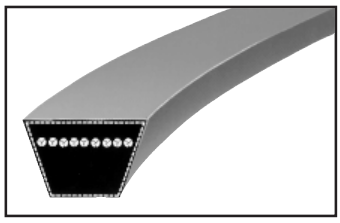

optibelt ***VB***
Classical belts to BS 3790 and DIN 2215

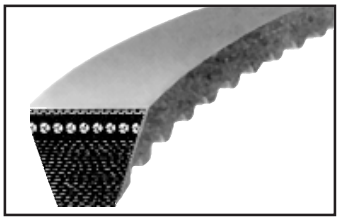

optibelt ***MARATHON 1***
Automotive fan belts – raw edge, moulded cogged, maintenance free

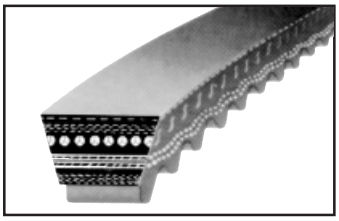

optibelt ***MARATHON 2 M=S***
Automotive fan belts – raw edge, moulded cogged, maintenance free, heavy duty, may be used in sets without restrictions

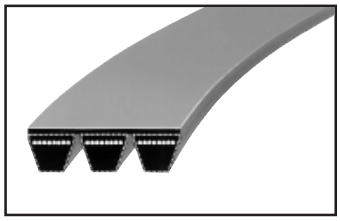

optibelt ***KB***
Kraftbands

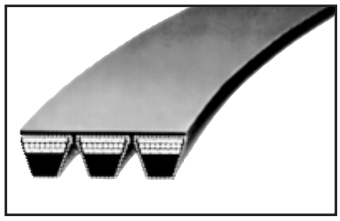

optibelt ***KB RED POWER II***
Kraftbands

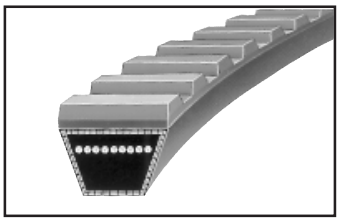

optibelt ***PKR***
Endless V-belts with patterned top surface DIN 2215

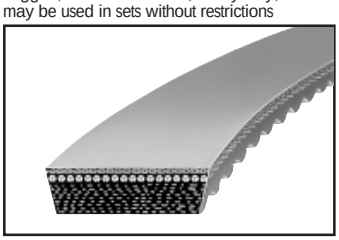

optibelt ***SUPER VX***
Variable speed belts – moulded cogged raw edge

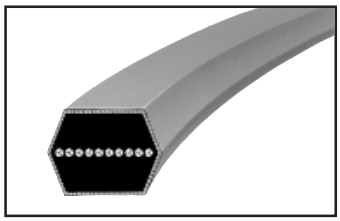

optibelt ***DK***
Double section V-belts DIN 7722

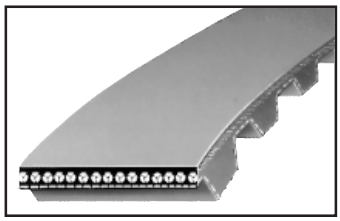

optibelt ***ZR/HTD®/ZRK***
Timing belts

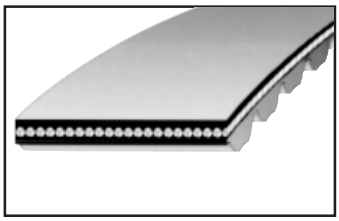

optibelt ***OMEGA***
Timing belts

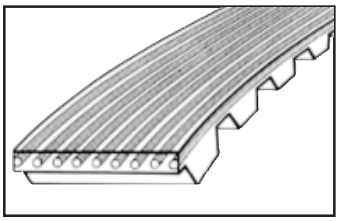

optibelt ***ZRM/ZRP/ZRL/ Optiflex***
Polyurethane timing belts and open ended timing belting

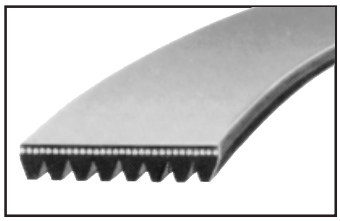

optibelt ***RB/RBK***
Ribbed belts

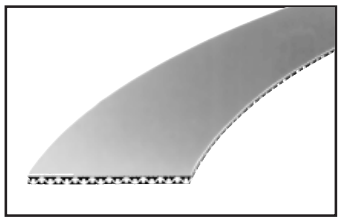

optimax ***HF***
Endless flat belts

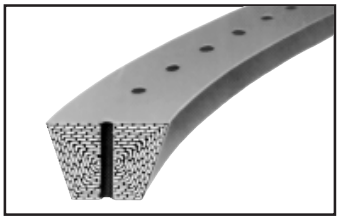

optimat ***OE***
Open ended V-belting, punched DIN 2216

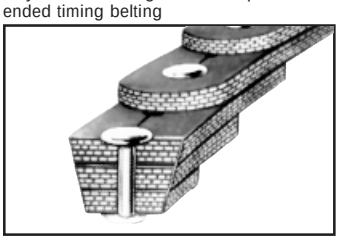

optibelt ***LB***
Link belting

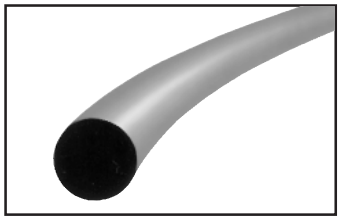

optibelt ***RR***
Round plastic belting

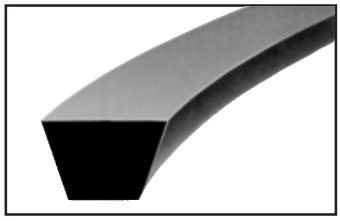

optibelt ***KK***
Plastic V-belting

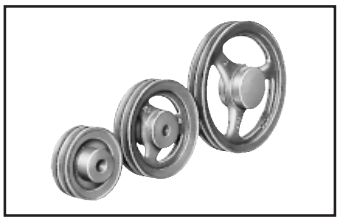

optibelt ***KS***
V-grooved pulleys

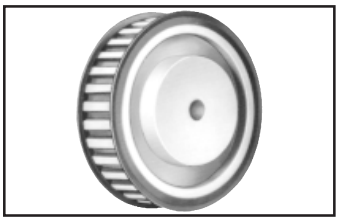

optibelt ***ZRS***
Timing belt pulleys

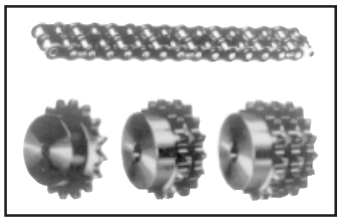

optichain ***RK/RKB/KTR***
Roller chain
Chain sprockets

optibelt ***CE***
Clamping bushes

© Arntz Optibelt Gruppe 414227 / 0501

Optibelt GmbH • P.O. Box 10 0132 • D-37669 Höxter / Germany
Telefon +49 (0)52 71 6 21 • Fax +49 (0)52 71 97 62 00 • info@optibelt.com • www.optibelt.com